RICOH UNIVERSITY
Learning ◆ Knowledge ◆ Performance

# D023/D025

# SERVICE MANUAL

**(Book 1 of 2)** **003987MIU**

**MAINFRAME**

LANIER RICOH savin

RICOH UNIVERSITY
Learning ◆ Knowledge ◆ Performance

# D023/D025
# SERVICE MANUAL
## B00K 1 of 2 MAINFRAME

LANIER
RICOH
savin

RICOH UNIVERSITY
Learning ◆ Knowledge ◆ Performance

# D023/D025
# SERVICE MANUAL

## BOOK 1 of 2

## MAINFRAME

003987MIU

LANIER RICOH savin

It is the reader's responsibility when discussing the information contained within this document to maintain a level of confidentiality that is in the best interest of Ricoh Americas Corporation and its member companies.

***NO PART OF THIS DOCUMENT MAY BE REPRODUCED IN ANY FASHION AND DISTRIBUTED WITHOUT THE PRIOR PERMISSION OF RICOH AMERICAS CORPORATION.***

All product names, domain names or product illustrations, including desktop images, used in this document are trademarks, registered trademarks or the property of their respective companies.
They are used throughout this book in an informational or editorial fashion only and for the benefit of such companies. No such use, or the use of any trade name, or web site is intended to convey endorsement or other affiliation with Ricoh products.

**© 2008 RICOH Americas Corporation. All rights reserved.**

## *WARNING*

***The Service Manual contains information regarding service techniques, procedures, processes and spare parts of office equipment distributed by Ricoh Americas Corporation. Users of this manual should be either service trained or certified by successfully completing a Ricoh Technical Training Program.***

***Untrained and uncertified users utilizing information contained in this service manual to repair or modify Ricoh equipment risk personal injury, damage to property or loss of warranty protection.***

***Ricoh Americas Corporation***

# LEGEND

| PRODUCT CODE | COMPANY | | | |
|---|---|---|---|---|
| | GESTETNER | LANIER | RICOH | SAVIN |
| D023 | MP C2800 | LD528C | Aficio MP C2800 | C2828 |
| D025 | MP C3300 | LD533C | Aficio MP C3300 | C3333 |
| | | | | |
| | | | | |
| | | | | |

# DOCUMENTATION HISTORY

| REV. NO. | DATE | COMMENTS |
|---|---|---|
| * | 10/2008 | Original Printing |
| | | |
| | | |
| | | |

# D023/D025

## TABLE OF CONTENTS

## PRODUCT INFORMATION


**1. PRODUCT INFORMATION.....1-1**

1.1 SPECIFICATIONS .....1-1

1.2 OVERVIEW.....1-2

1.2.1 COMPONENT LAYOUT .....1-2

1.2.2 PAPER PATH .....1-4

1.2.3 DRIVE LAYOUT.....1-5

1.3 MACHINE CONFIGURATION .....1-7

1.4 GUIDANCE FOR THOSE WHO ARE FAMILIAR WITH PREDECESSOR PRODUCTS .....1-11


## INSTALLATION


**2. INSTALLATION .....2-1**

2.1 INSTALLATION REQUIREMENTS.....2-1

2.1.1 ENVIRONMENT .....2-1

2.1.2 MACHINE LEVEL .....2-1

2.1.3 MACHINE SPACE REQUIREMENTS .....2-2

2.1.4 POWER REQUIREMENTS.....2-2

2.2 OPTIONAL UNIT COMBINATIONS.....2-3

2.2.1 MACHINE OPTIONS .....2-3

2.2.2 CONTROLLER OPTIONS .....2-4

2.2.3 FAX OPTIONS.....2-5

2.2.4 OTHER OPTIONS .....2-5

2.3 COPIER INSTALLATION.....2-6

2.3.1 POWER SOCKETS FOR PERIPHERALS.....2-6

2.3.2 INSTALLATION FLOW CHART.....2-7

2.3.3 INSTALLATION PROCEDURE.....2-8

Tapes and Retainers .....2-8

Developer and Toner Bottles.....2-9
Paper Trays.....2-10
Emblem and Decals .....2-11
Manual Pocket Attachment.....2-11
Initialize the Developer .....2-12
Settings Relevant to the Service Contract.....2-12
Settings for @Remote Service .....2-13
2.3.4 MOVING THE MACHINE.....2-17
2.3.5 TRANSPORTING THE MACHINE.....2-17
2.4 ONE-TRAY PAPER FEED UNIT (D387).....2-18
2.4.1 ACCESSORY CHECK.....2-18
2.4.2 INSTALLATION PROCEDURE.....2-19
2.5 CASTER TABLE (D446) .....2-21
2.5.1 COMPONENT CHECK .....2-21
2.5.2 INSTALLATION PROCEDURE.....2-21
2.6 PAPER FEED UNIT INSTALLATION (D351).....2-23
2.6.1 ACCESSORY CHECK.....2-23
2.6.2 INSTALLATION PROCEDURE.....2-24
2.7 2000-SHEET LCT .....2-26
2.7.1 ACCESSORY CHECK.....2-26
2.7.2 INSTALLATION PROCEDURE.....2-26
2.8 1200-SHEET LCT (D353) .....2-29
2.8.1 COMPONENT CHECK .....2-29
2.8.2 INSTALLATION PROCEDURE.....2-30
2.8.3 SIDE FENCE POSITION CHANGE .....2-32
2.9 AUTO REVERSE DOCUMENT FEEDER (D366) .....2-33
2.9.1 COMPONENT CHECK .....2-33
2.9.2 INSTALLATION PROCEDURE.....2-34
2.10 DOCUMENT FEEDER HANDLE TYPE 5 .....2-37
2.10.1 COMPONENT CHECK.....2-37
2.10.2 INSTALLATION PROCEDURE .....2-38
Preparing before Installing the DF Handle .....2-38
Installing the DF Handle .....2-40
2.11 1-BIN TRAY UNIT (D414) .....2-43
2.11.1 COMPONENT CHECK.....2-43
2.11.2 INSTALLATION PROCEDURE .....2-43

2.12 SHIFT TRAY UNIT (D388) .....2-46
2.12.1 COMPONENT CHECK.....2-46
2.12.2 INSTALLATION PROCEDURE .....2-46
2.13 BRIDGE UNIT (D386) .....2-48
2.13.1 COMPONENT CHECK.....2-48
2.13.2 INSTALLATION PROCEDURE .....2-49
2.14 500-SHEET FINISHER (D372).....2-52
2.14.1 ACCESSORY CHECK .....2-52
2.14.2 INSTALLATION PROCEDURE .....2-53
2.15 1000-SHEET FINISHER (B408).....2-55
2.15.1 ACCESSORY CHECK .....2-55
2.15.2 INSTALLATION PROCEDURE .....2-56
2.16 1000-SHEET BOOKLET FINISHER (B793) .....2-58
2.16.1 ACCESSORY CHECK .....2-58
2.16.2 INSTALLATION PROCEDURE .....2-59
2.17 PUNCH UNIT .....2-63
2.17.1 COMPONENT CHECK.....2-63
2.17.2 INSTALLATION.....2-65
2.18 MECHANICAL COUNTER (NA ONLY) .....2-70
2.18.1 INSTALLATION PROCEDURE .....2-70
2.19 KEY COUNTER BRACKET.....2-72
2.19.1 INSTALLATION PROCEDURE .....2-72
2.20 KEY COUNTER INTERFACE UNIT .....2-74
2.20.1 INSTALLATION PROCEDURE .....2-74
2.21 COPY DATA SECURITY UNIT TYPE F (B829) .....2-76
2.21.1 INSTALLATION.....2-76
User Tool Setting.....2-77
2.22 USB2.0/SD SLOT TYPE A .....2-78
2.22.1 ACCESSORY CHECK .....2-78
2.22.2 INSTALLATION PROCEDURE .....2-79
2.22.3 TESTING THE SD CARD/USB SLOT .....2-82
2.23 ANTI-CONDENSATION HEATER (SCANNER).....2-83
2.23.1 INSTALLATION PROCEDURE .....2-83
2.24 TRAY HEATER .....2-84
2.24.1 INSTALLATION PROCEDURE .....2-84
2.25 ANTI-CONDENSATION HEATER TYPE A .....2-85

2.25.1 COMPONENT CHECK.....2-85
2.25.2 INSTALLATION PROCEDURE.....2-86
For installing the tray heater in D351.....2-86
Installing the Tray Heater in D352.....2-88
For Installing the Tray Heater in D387.....2-91
2.26 CONTROLLER OPTIONS.....2-94
2.26.1 OVERVIEW.....2-94
I/F Card Slots.....2-94
SD Card Slots.....2-94
2.26.2 SD CARD APPLI MOVE.....2-95
Overview.....2-95
Move Exec.....2-96
Undo Exec.....2-96
2.26.3 POSTSCRIPT 3.....2-98
2.26.4 FILE FORMAT CONVERTER.....2-99
2.26.5 IEEE1284.....2-100
Installation Procedure.....2-100
2.26.6 IEEE 802.11 A/G, G (WIRELESS LAN).....2-101
Installation Procedure.....2-101
UP Mode Settings for Wireless LAN.....2-102
SP Mode and UP Mode Settings for
IEEE 802.11 a/g, g Wireless LAN.....2-104
2.26.7 BLUETOOTH.....2-105
2.26.8 DATA OVERWRITE SECURITY UNIT TYPE H (D377).....2-106
Before You Begin the Procedure.....2-106
Seal Check and Removal.....2-107
Installation Procedure.....2-107
2.26.9 HDD ENCRYPTION UNIT.....2-109
Before You Begin the Procedure.....2-109
Seal Check and Removal.....2-110
Installation Procedure.....2-111
Recovery from a Device Problem.....2-112
Restoring the encryption key.....2-112
Clearing the NVRAM.....2-113
2.26.10 PICTBRIDGE.....2-114
2.26.11 VM CARD TYPE I.....2-115

Installation Procedure.....2-115
2.26.12 BROWSER UNIT TYPE B .....2-116
Installation Procedure.....2-116
Update Procedure .....2-117
2.26.13 GIGABIT ETHERNET .....2-118
2.26.14 CHECK ALL CONNECTIONS .....2-119

## PREVENTIVE MAINTENANCE

**3. PREVENTIVE MAINTENANCE .....3-1**
3.1 MAINTENANCE TABLES .....3-1
3.2 PM PARTS SETTINGS.....3-2
3.2.1 BEFORE REMOVING THE OLD PM PARTS .....3-2
3.2.2 AFTER INSTALLING THE NEW PM PARTS.....3-3
3.2.3 PREPARATION BEFORE OPERATION CHECK .....3-4
3.2.4 OPERATION CHECK .....3-4

## REPLACEMENT AND ADJUSTMENT

**4. REPLACEMENT AND ADJUSTMENT .....4-1**
4.1 BEFOREHAND .....4-1
4.2 SPECIAL TOOLS.....4-2
4.3 IMAGE ADJUSTMENT .....4-3
4.3.1 SCANNING .....4-3
Scanner sub-scan magnification .....4-3
Scanner leading edge and side-to-side registration .....4-3
4.3.2 ARDF .....4-4
ARDF side-to-side, leading edge registration and trailing edge .....4-4
ARDF sub-scan magnification .....4-5
4.3.3 REGISTRATION .....4-6
Image Area.....4-6
Leading Edge .....4-6
Side to Side .....4-6
Adjustment Standard .....4-6
Paper Registration Standard .....4-6

Adjustment Procedure ....4-6
4.3.4 ERASE MARGIN ADJUSTMENT ....4-8
4.3.5 COLOR REGISTRATION ....4-9
Line Position Adjustment ....4-9
4.3.6 PRINTER GAMMA CORRECTION ....4-10
Copy Mode ....4-10
Printer Mode ....4-14
4.4 EXTERIOR COVERS ....4-16
4.4.1 FRONT DOOR ....4-16
4.4.2 LEFT COVER ....4-17
4.4.3 REAR COVER ....4-17
4.4.4 RIGHT REAR COVER ....4-18
4.4.5 OPERATION PANEL ....4-19
4.4.6 PAPER EXIT COVER ....4-20
4.4.7 INNER TRAY ....4-20
4.4.8 DUST FILTER ....4-21
4.4.9 OZONE FILTER ....4-22
Ozone filters for the scanner unit ....4-22
4.5 SCANNER UNIT ....4-23
4.5.1 EXPOSURE GLASS ....4-23
4.5.2 ORIGINAL LENGTH/WIDTH SENSORS ....4-24
4.5.3 EXPOSURE LAMP ....4-25
Reassembling ....4-26
4.5.4 SCANNER MOTOR ....4-27
4.5.5 SENSOR BOARD UNIT (SBU) ....4-28
When reassembling ....4-28
4.5.6 EXPOSURE LAMP STABILIZER ....4-29
4.5.7 SIO (SCANNER IN/OUT) BOARD ....4-29
4.5.8 SCANNER HP SENSOR ....4-30
4.5.9 PLATEN COVER SENSOR ....4-31
4.5.10 FRONT SCANNER WIRE ....4-32
Reinstalling the Front Scanner Wire ....4-33
4.5.11 REAR SCANNER WIRE ....4-36
Reinstalling the Rear Scanner Wire ....4-36
4.5.12 TOUCH PANEL POSITION ADJUSTMENT ....4-38
4.6 LASER OPTICS ....4-39

4.6.1 CAUTION DECAL LOCATION.....4-39
4.6.2 LASER OPTICS HOUSING UNIT.....4-40
Preparing the new laser optics housing unit.....4-40
Before removing the old laser optics housing unit.....4-40
Recovery procedure for no replacement preparation
of laser optics housing unit.....4-41
Removing the old laser optics housing unit.....4-42
Installing a new Laser Optics Housing Unit.....4-43
After installing the new laser optics housing unit.....4-43
4.6.3 POLYGON MIRROR MOTOR AND DRIVE BOARD .....4-45
4.7 IMAGE CREATION.....4-47
4.7.1 PCU .....4-47
4.7.2 DRUM UNIT AND DEVELOPMENT UNIT.....4-48
Developer.....4-50
4.7.3 TONER COLLECTION BOTTLE.....4-52
4.7.4 SECOND DUCT FAN .....4-53
When reinstalling the second duct fan.....4-54
4.7.5 THIRD DUCT FAN.....4-55
When reinstalling the third duct fan .....4-55
4.7.6 TONER PUMP UNIT.....4-56
When you install the new toner pump unit.....4-58
4.7.7 TONER END SENSOR.....4-61
4.8 IMAGE TRANSFER .....4-62
4.8.1 IMAGE TRANSFER BELT UNIT.....4-62
4.8.2 IMAGE TRANSFER BELT CLEANING UNIT.....4-63
4.8.3 IMAGE TRANSFER BELT .....4-64
When reinstalling the image transfer belt .....4-66
4.9 PAPER TRANSFER.....4-68
4.9.1 PAPER TRANSFER ROLLER UNIT.....4-68
4.9.2 PAPER TRANSFER UNIT .....4-69
4.9.3 HIGH VOLTAGE SUPPLY BOARD - DISCHARGE PLATE.....4-71
4.9.4 ID SENSOR BOARD .....4-72
Cleaning for ID sensors.....4-72
After installing a new ID sensor unit/board .....4-73
4.9.5 TEMPERATURE AND HUMIDITY SENSOR.....4-74
4.10 DRIVE UNIT.....4-75

4.10.1 GEAR UNIT ....4-76
When installing the drive unit....4-80
Adjustment after replacing the gear unit....4-80
4.10.2 REGISTRATION MOTOR ....4-82
4.10.3 PAPER FEED MOTOR ....4-83
4.10.4 DRUM/DEVELOPMENT MOTORS FOR M, C, AND Y ....4-84
4.10.5 DRUM/DEVELOPMENT MOTOR-K....4-85
4.10.6 ITB DRIVE MOTOR ....4-85
4.10.7 FUSING/PAPER EXIT MOTOR ....4-86
4.10.8 IMAGE TRANSFER BELT CONTACT MOTOR ....4-86
4.10.9 PAPER TRANSFER CONTACT MOTOR ....4-87
4.10.10 DUPLEX INVERTER MOTOR ....4-88
4.10.11 DUPLEX/BY-PASS MOTOR....4-90
4.10.12 TONER TRANSPORT MOTOR....4-91
4.10.13 TONER COLLECTION UNIT ....4-92
4.10.14 PAPER FEED CLUTCHES....4-93
4.10.15 DEVELOPMENT CLUTCH-Y....4-95
4.10.16 DEVELOPMENT CLUTCHES FOR M AND C ....4-97
4.10.17 DEVELOPMENT CLUTCH-K....4-98
4.11 FUSING....4-99
4.11.1 PM PARTS....4-99
4.11.2 FUSING UNIT ....4-100
4.11.3 PRESSURE ROLLER LAMP....4-101
4.11.4 FUSING LAMP ....4-103
4.11.5 FUSING BELT AND PRESSURE ROLLER ....4-104
When reassembling the fusing unit ....4-106
4.11.6 HEATING, FUSING AND TENSION ROLLER ....4-108
4.11.7 HEATING ROLLER THERMOSTATS ....4-108
4.11.8 HEATING ROLLER THERMISTOR ....4-109
4.11.9 PRESSURE ROLLER THERMISTOR AND THERMOSTAT....4-110
4.11.10 FUSING GEAR AND ONE-WAY CLUTCH ....4-111
4.11.11 HEATING ROLLER BEARING AND INSULATING BUSHING ....4-111
4.11.12 PRESSURE ROLLER BEARING....4-112

4.11.13 FUSING/PAPER EXIT FAN .....4-113
When Reinstalling the Fan .....4-113
4.11.14 THERMOPILE .....4-114
4.12 PAPER FEED.....4-116
4.12.1 PAPER FEED UNIT .....4-116
4.12.2 PICK-UP, FEED AND SEPARATION ROLLERS .....4-117
Tray 1 and Tray 2 .....4-117
4.12.3 TRAY LIFT MOTOR .....4-118
4.12.4 VERTICAL TRANSPORT, PAPER OVERFLOW AND PAPER END SENSOR .....4-119
4.12.5 REGISTRATION SENSOR .....4-120
4.12.6 BY-PASS PAPER SIZE SENSOR AND BY-PASS PAPER LENGTH SENSOR .....4-121
When reinstalling the by-pass paper size sensor .....4-122
4.12.7 BY-PASS BOTTOM TRAY .....4-123
4.12.8 BY-PASS PAPER END SENSOR .....4-126
4.12.9 BY-PASS PICK-UP, FEED AND SEPARATION ROLLER, TORQUE LIMITER.....4-127
4.12.10 BY-PASS FEED CLUTCH .....4-128
4.12.11 PAPER EXIT UNIT .....4-129
4.12.12 FUSING EXIT, PAPER OVERFLOW, JUNCTION PAPER JAM AND PAPER EXIT SENSOR .....4-130
4.13 DUPLEX UNIT.....4-132
4.13.1 DUPLEX UNIT.....4-132
4.13.2 DUPLEX DOOR SENSOR .....4-134
4.13.3 DUPLEX ENTRANCE SENSOR .....4-134
4.13.4 DUPLEX EXIT SENSOR.....4-135
4.14 ELECTRICAL COMPONENTS.....4-136
4.14.1 BOARDS .....4-136
4.14.2 CONTROLLER UNIT .....4-139
4.14.3 CONTROLLER BOX RIGHT COVER .....4-140
4.14.4 CONTROLLER BOX .....4-140
When opening the controller box.....4-140
When removing the controller box.....4-141
4.14.5 IOB (IN/OUT BOARD).....4-143
4.14.6 BICU.....4-144

When installing the new BICU .....4-144
4.14.7 PSU .....4-145
PSU bracket .....4-145
PSU board .....4-145
4.14.8 ITB POWER SUPPLY BOARD .....4-146
4.14.9 HIGH VOLTAGE SUPPLY BOARD .....4-146
4.14.10 HIGH VOLTAGE SUPPLY BOARD BRACKET .....4-147
4.14.11 CONTROLLER BOARD .....4-148
When installing the new controller board .....4-148
4.14.12 HDD FAN .....4-149
4.14.13 HDD .....4-150
When installing a new HDD unit .....4-150
Disposal of HDD Units .....4-150
Reinstallation .....4-151
4.14.14 NVRAM REPLACEMENT PROCEDURE .....4-152
NVRAM on the BICU .....4-152
NVRAM on the Controller .....4-152
4.15 USING DIP SWITCHES .....4-154
4.15.1 CONTROLLER BOARD .....4-154
4.15.2 BICU BOARD .....4-154

## SYSTEM MAINTENANCE REFERENCE

**5. SYSTEM MAINTENANCE REFERENCE .....5-1**
5.1 SERVICE PROGRAM MODE .....5-1
5.1.1 SP TABLES .....5-1
5.1.2 ENABLING AND DISABLING SERVICE PROGRAM MODE .....5-1
Entering SP Mode .....5-1
Exiting SP Mode .....5-1
5.1.3 TYPES OF SP MODES .....5-2
SP Mode Button Summary .....5-2
Switching Between SP Mode and Copy Mode for Test Printing .....5-3
Selecting the Program Number .....5-3
Exiting Service Mode .....5-4
Service Mode Lock/Unlock .....5-4

5.1.4 REMARKS .....5-5
Display on the Control Panel Screen.....5-5
Others .....5-6
5.2 FIRMWARE UPDATE .....5-7
5.2.1 TYPE OF FIRMWARE .....5-7
5.2.2 BEFORE YOU BEGIN .....5-9
5.2.3 UPDATING FIRMWARE .....5-10
Preparation.....5-10
Updating Procedure .....5-10
Error Messages .....5-11
Firmware Update Error .....5-11
Recovery after Power Loss .....5-12
5.2.4 UPDATING THE LCDC FOR THE OPERATION PANEL .....5-12
5.2.5 DOWNLOADING STAMP DATA.....5-13
5.2.6 NVRAM DATA UPLOAD/DOWNLOAD.....5-14
Uploading Content of NVRAM to an SD card .....5-14
Downloading an SD Card to NVRAM .....5-14
5.2.7 ADDRESS BOOK UPLOAD/DOWNLOAD.....5-16
Information List.....5-16
Download .....5-16
Upload.....5-17
5.2.8 INSTALLING ANOTHER LANGUAGE.....5-18
5.2.9 HANDLING FIRMWARE UPDATE ERRORS .....5-21
Error Message Table.....5-21
5.3 INSTALLING ANOTHER LANGUAGE.....5-23
5.4 REBOOT/SYSTEM SETTING RESET.....5-26
5.4.1 SOFTWARE RESET.....5-26
5.4.2 SYSTEM SETTINGS AND COPY SETTING RESET .....5-26
System Setting Reset.....5-26
Copier Setting Reset .....5-26
5.5 CONTROLLER SELF-DIAGNOSTICS.....5-28
5.5.1 OVERVIEW.....5-28
5.6 SD CARD APPLI MOVE .....5-29
5.6.1 OVERVIEW.....5-29
5.6.2 MOVE EXEC.....5-30
5.6.3 UNDO EXEC.....5-31

5.7 DOWNLOADING STAMP DATA.....5-32
5.8 NVRAM DATA UPLOAD/DOWNLOAD.....5-33
5.8.1 UPLOADING CONTENT OF NVRAM TO AN SD CARD.....5-33
5.8.2 DOWNLOADING AN SD CARD TO NVRAM.....5-34
5.9 ADDRESS BOOK UPLOAD/DOWNLOAD.....5-35
5.9.1 INFORMATION LIST .....5-35
5.9.2 DOWNLOAD.....5-35
5.9.3 UPLOAD .....5-36
5.10 USING THE DEBUG LOG.....5-37
5.10.1 OVERVIEW .....5-37
5.10.2 SWITCHING ON AND SETTING UP SAVE DEBUG LOG...5-38
5.10.3 RETRIEVING THE DEBUG LOG FROM THE HDD.....5-42
5.10.4 RECORDING ERRORS MANUALLY .....5-43
5.10.5 NEW DEBUG LOG CODES .....5-43
SP5857-015 Copy SD Card-to-SD Card: Any Desired Key.....5-43
SP5857-016 Create a File on HDD to Store a Log.....5-44
SP5857-017 Create a File on SD Card to Store a Log.....5-44
5.11 CARD SAVE FUNCTION .....5-45
5.11.1 OVERVIEW .....5-45
Card Save: .....5-45
5.11.2 PROCEDURE .....5-46
5.11.3 ERROR MESSAGES .....5-50

# TROUBLESHOOTING

**6. TROUBLESHOOTING .....6-1**
6.1 SERVICE CALL CONDITIONS.....6-1
6.2 PROCESS CONTROL ERROR CONDITIONS.....6-2
6.3 TROUBLESHOOTING GUIDE.....6-3
6.3.1 STACK PROBLEM IN THE 1-BIN TRAY .....6-3
6.4 JAM DETECTION .....6-4
6.5 ELECTRICAL COMPONENT DEFECTS .....6-5
6.6 SCANNER TEST MODE.....6-6
6.6.1 SBU TEST MODE.....6-6
6.6.2 IPU TEST MODE .....6-6

SP4-904-1 Register Access .....6-6
SP4-904-2 Image Path.....6-6

## D023/D025 SERVICE MANUAL APPENDICES

SEE D023/D025 SERVICE MANUAL APPENDICES SECTION FOR DETAILED TABLE OF CONTENTS

## 1000 SHEET FINISHER (B408)

SEE SECTION B408 FOR DETAILED TABLE OF CONTENTS

## BOOKLET FINISHER (B793)

SEE SECTION B793 FOR DETAILED TABLE OF CONTENTS

## PAPER FEED UNIT PB3040 (D351)

SEE SECTION D351 FOR DETAILED TABLE OF CONTENTS

## LCIT PB3050 (D352)

SEE SECTION D352 FOR DETAILED TABLE OF CONTENTS

## 1200 SHEET LCIT RT3000 (D353)

SEE SECTION D353 FOR DETAILED TABLE OF CONTENTS

## 500 SHEET FINISHER SR3050 (D372)

SEE SECTION D372 FOR DETAILED TABLE OF CONTENTS

## BRIDGE UNIT BU3030 (D386)

SEE SECTION D386 FOR DETAILED TABLE OF CONTENTS

## PAPER FEED UNIT PB3080(D387)

SEE SECTION d387 FOR DETAILED TABLE OF CONTENTS

## INTERNAL SHIFT TRAY SH3040 (D388)

SEE SECTION D388 FOR DETAILED TABLE OF CONTENTS

## FAX OPTION TYPE C5000 (D393)

SEE SECTION D393 FOR DETAILED TABLE OF CONTENTS

## 1 BIN TRAY BN3070 (D414)

SEE SECTION B408 FOR DETAILED TABLE OF CONTENTS

PRODUCT INFORMATION

APPENDIX: SPECIFICATIONS

TAB POSITION 1

INSTALLATION

APPENDIX: MAINTENANCE TABLES

PAPER FEED UNIT PB3080 (D387)

TAB POSITION 2

PREVENTIVE MAINTENANCE

APPENDIX: SERVICE CALL CONDITIONS

TAB POSITION 3

REPLACEMENT AND ADJUSTMENT

APPENDIX: PROCESS CONTROL ERROR CONDITIONS

TAB POSITION 4

SYSTEM MAINTENANCE REFERENCE

APPENDIX: TROUBLESHOOTING GUIDE

TAB POSITION 5

TROUBLESHOOTING

APPENDIX: JAM DETECTION

TAB POSITION 6

APPENDIX: ELECTRICAL COMPONENT DEFECTS

TAB POSITION 7

APPENDIX: SP MODE TABLES

TAB POSITION 8

# Read This First

## Important Safety Notices

### Prevention of Physical Injury

1. Before disassembling or assembling parts of the copier and peripherals, make sure that the copier power cord is unplugged.
2. The wall outlet should be near the copier and easily accessible.
3. If any adjustment or operation check has to be made with exterior covers off or open while the main switch is turned on, keep hands away from electrified or mechanically driven components.
4. The copier drives some of its components when it completes the warm-up period. Be careful to keep hands away from the mechanical and electrical components as the copier starts operation.
5. The inside and the metal parts of the fusing unit become extremely hot while the copier is operating. Be careful to avoid touching those components with your bare hands.

### Health Safety Conditions

1. Toner and developer are non-toxic, but if you get either of them in your eyes by accident, it may cause temporary eye discomfort. Immediately wash eyes with plenty of water. If unsuccessful, get medical attention.
2. The copier, which use high voltage power source, can generate ozone gas. High ozone density is harmful to human health. Therefore, the machine must be installed in a well-ventilated room.

### Observance of Electrical Safety Standards

The copier and its peripherals must be serviced by a customer service representative who has completed the training course on those models.

**⚠WARNING**

- ⃠ Keep the machine away from flammable liquids, gases, and aerosols. A fire or an explosion might occur.

**⚠CAUTION**

- The Controller board on this machine contains a lithium battery. The danger of explosion exists if a battery of this type is incorrectly replaced. Replace only with the same or an equivalent type recommended by the manufacturer. Discard

batteries in accordance with the manufacturer's instructions and local regulations.

- The optional fax and memory expansion units contain lithium batteries, which can explode if replaced incorrectly. Replace only with the same or an equivalent type recommended by the manufacturer. Do not recharge or burn the batteries. Used batteries must be handled in accordance with local regulations.

## Safety and Ecological Notes for Disposal

1. Do not incinerate toner bottles or used toner. Toner dust may ignite suddenly when exposed to an open flame.
2. Dispose of used toner, the maintenance unit which includes developer or the organic photoconductor in accordance with local regulations. (These are non-toxic supplies.)
3. Dispose of replaced parts in accordance with local regulations.
4. When keeping used lithium batteries in order to dispose of them later, do not put more than 100 batteries per sealed box. Storing larger numbers or not sealing them apart may lead to chemical reactions and heat build-up.

## Laser Safety

The Center for Devices and Radiological Health (CDRH) prohibits the repair of laser-based optical units in the field. The optical housing unit can only be repaired in a factory or at a location with the requisite equipment. The laser subsystem is replaceable in the field by a qualified Customer Engineer. The laser chassis is not repairable in the field. Customer engineers are therefore directed to return all chassis and laser subsystems to the factory or service depot when replacement of the optical subsystem is required.

**⚠WARNING**

- **Use of controls, or adjustment, or performance of procedures other than those specified in this manual may result in hazardous radiation exposure.**

## ⚠WARNING

- **WARNING**: Turn off the main switch before attempting any of the procedures in the Laser Optics Housing Unit section. Laser beams can seriously damage your eyes.
- **CAUTION MARKING:**

## Symbols, Abbreviations and Trademarks

This manual uses several symbols and abbreviations. The meaning of those symbols and abbreviations are as follows:

| | |
|---|---|
| ☛ | See or Refer to |
| | Clip ring |
| | Screw |
| | Connector |
| | Clamp |
| | E-ring |
| SEF | Short Edge Feed |
| LEF | Long Edge Feed |

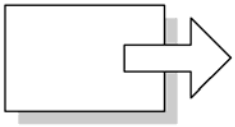

Short Edge Feed (SEF)

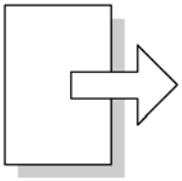

Long Edge Feed (LEF)

## Trademarks

Microsoft®, Windows®, and MS-DOS® are registered trademarks of Microsoft Corporation in the United States and /or other countries.

PostScript® is a registered trademark of Adobe Systems, Incorporated.

PCL® is a registered trademark of Hewlett-Packard Company.

Ethernet® is a registered trademark of Xerox Corporation.

PowerPC® is a registered trademark of International Business Machines Corporation.

Other product names used herein are for identification purposes only and may be trademarks of their respective companies. We disclaim any and all rights involved with those marks.

# PRODUCT INFORMATION

| SECTION 1 PRODUCT INFORMATION REVISION HISTORY | | |
|---|---|---|
| **Page** | **Date** | **Added/Updated/New** |
| | | None |

# 1. PRODUCT INFORMATION

## 1.1 SPECIFICATIONS

See "Appendices" for the following information:

- Mainframe Specifications
- Printer Specifications
- Scanner Specifications
- Supported Paper Sizes
- Software Accessories
- Optional Equipment

# 1.2 OVERVIEW

## 1.2.1 COMPONENT LAYOUT

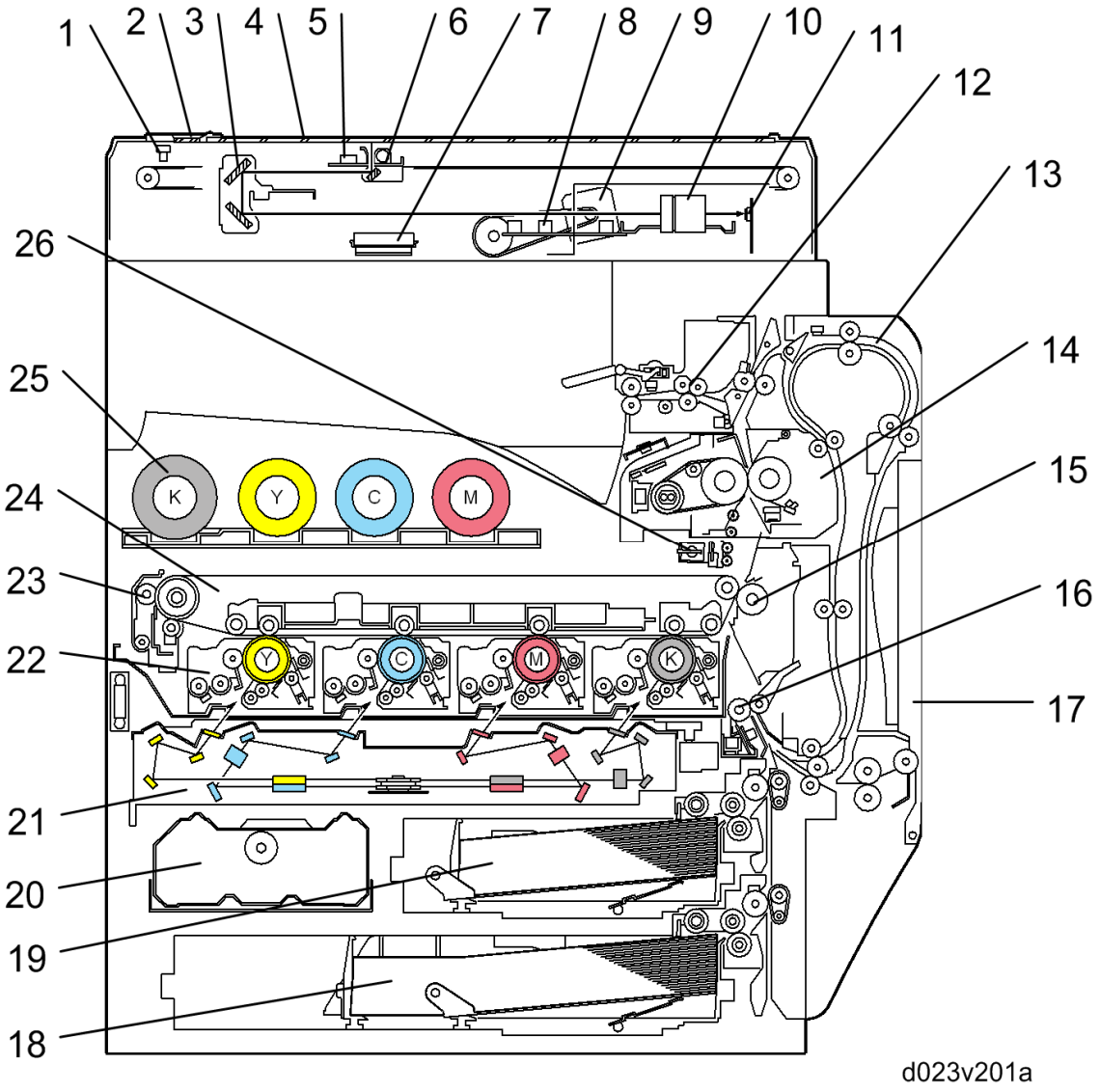

| | |
|---|---|
| 1. Scanner HP Sensor | 14. Fusing Unit |
| 2. ADF Exposure Glass | 15. Paper Transfer Roller |
| 3. 2nd Scanner (2nd Carriage) | 16. Registration Roller |
| 4. Exposure Glass | 17. By-Pass Feed Table |
| 5. 1st Scanner (1st Carriage) | 18. Tray 2 |
| 6. Scanner Lamp | 19. Tray 1 |
| 7. Original Width Sensor | 20. Toner Collection Bottle |
| 8. Original Length Sensor | 21. Laser Optics Housing Unit |
| 9. Scanner Motor | 22. PCU (4 Colors) |
| 10. Lens Block | 23. Image Transfer Belt Cleaning Unit |
| 11. Sensor Board Unit (SBU) | 24. Image Transfer Belt Unit |
| 12. Decurler Rollers | 25. Toner Bottle (4 Colors) |
| 13. Duplex Unit | 26. ID Sensor |

## 1.2.2 PAPER PATH

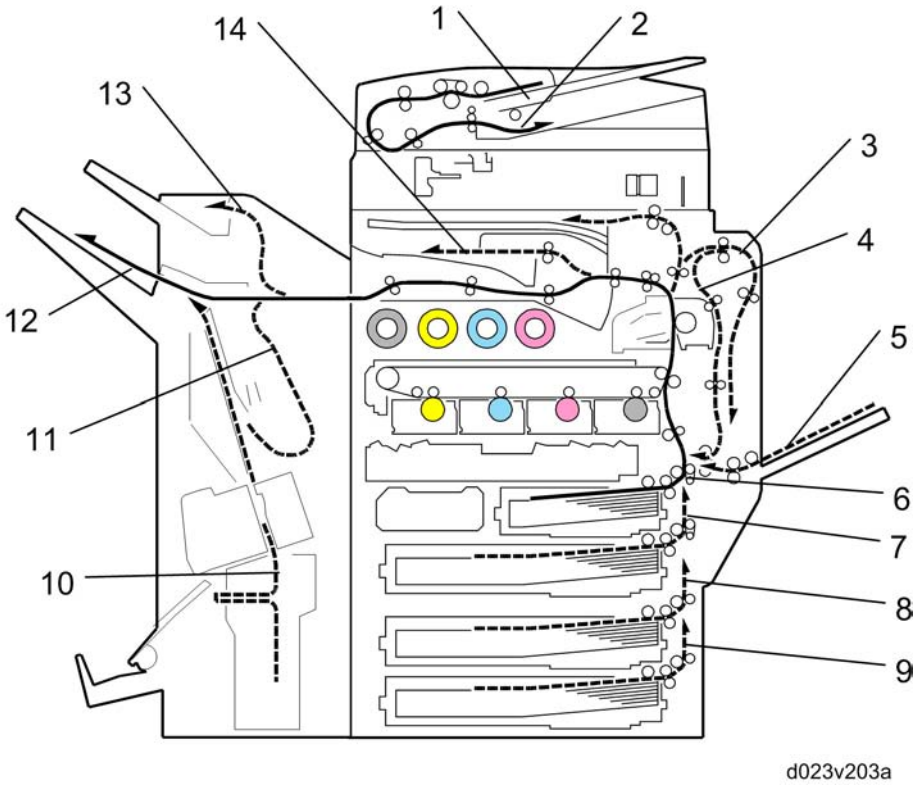


| | |
|---|---|
| 1. Original Tray | |
| 2. Original Exit Tray | 9. Tray 4: Optional Paper Feed Unit |
| 3. Duplex Inverter | 10. Finisher Stapler (Optional) |
| 4. Duplex Feed | 11. Finisher Punch (Optional) |
| 5. By-Pass Tray Feed | 12. Finisher Lower Tray (Optional) |
| 6. Tray 1 Feed | 13. Finisher Proof Tray (Optional) |
| 7. Tray 2 Feed | 14. Inner Tray |
| 8. Tray 3: Optional Paper Feed Unit/LCT | |

The 1000-sheet finisher and 1000-sheet booklet finisher require the bridge unit and one from the two-tray paper feed unit or the LCT.

## 1.2.3 DRIVE LAYOUT

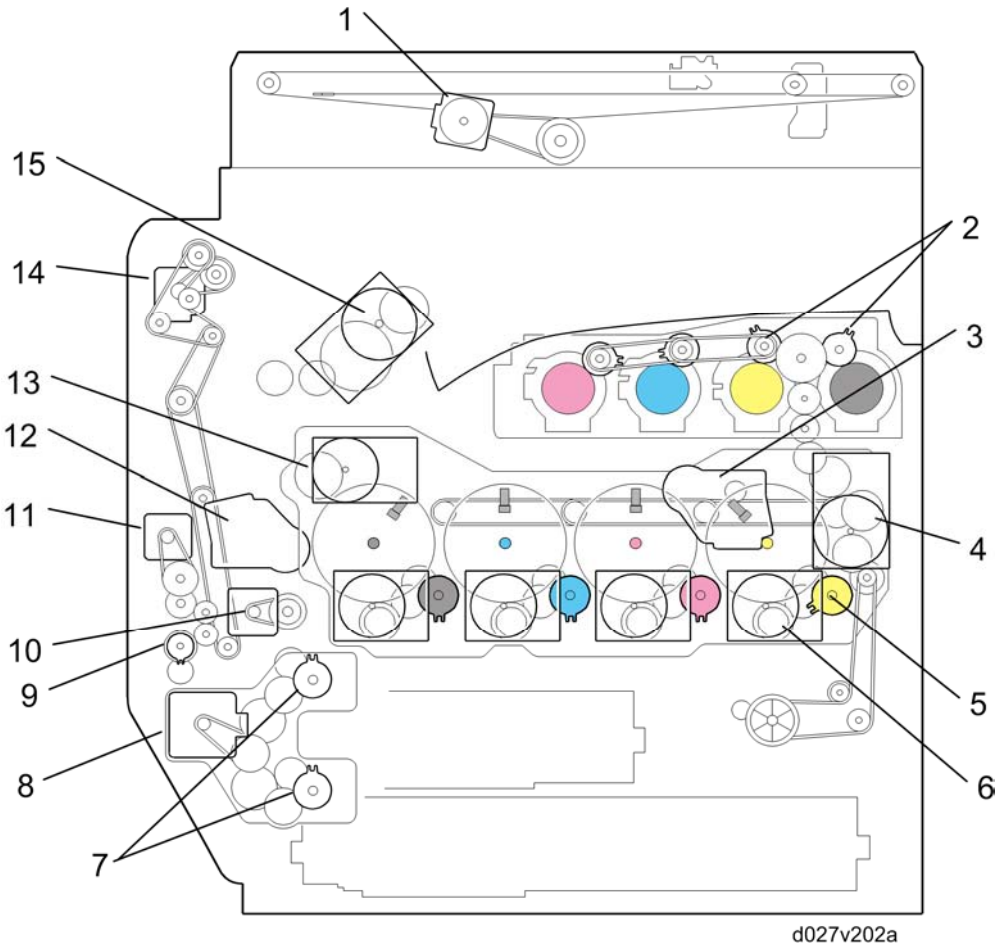


| | |
|---|---|
| 1. Scanner Motor: | Drives The Scanner Unit. |
| 2. Toner Supply Clutch-K And -CMY: | Turns On/Off The Drive Power To The Toner Supply Unit (K And -CMY). |
| 3.ITB (Image Transfer Belt) Contact Motor: | Moves The ITB Into Contact And Away From The Color Pcus. |
| 4. Toner Transport Motor: | Drives The Toner Attraction Pumps And The Toner Collection Coils From The Pcus, From The Transfer Belt Unit, And Inside The Toner Collection Bottle. Also Rotates The Toner Bottles. |
| 5. Development Clutch (K, Y, M, C): | Turns On/Off The Drive Power To The Development Unit (K, Y, M, C). |

| | |
|---|---|
| 6. Drum/Development Drive Motor (K, Y, M, C) | Drives The Color Drum Unit And Development Unit (K, Y, M, C). |
| 7. Paper Feed Clutch | Switches The Drive Power Between Tray 1 & Tray 2. |
| 8. Paper Feed Motor: | Drives The Paper Feed Mechanisms (Tray 1 & Tray 2). |
| 9. By-Pass Feed Clutch: | Turns On/Off The Drive Power To The By-Pass Pick-Up, Feed And Separation Rollers. |
| 10. Registration Motor: | Drives The Registration Roller. |
| 11. By-Pass/Duplex Feed Motor: | Drives The By-Pass Pick-Up, Feed And Separation Roller, And Duplex Transport Rollers. |
| 12. Paper Transfer Contact Motor: | Moves The Paper Transfer Roller In Contact With The Image Transfer Belt. |
| 13. ITB Drive Motor: | Drives The Image Transfer Belt Unit. |
| 14. Duplex Inverter Motor | Drives The Duplex Inverter Rollers And Duplex Transport Rollers. |
| 15. Fusing/Paper Exit Motor: | Drives The Fusing Unit And Paper Exit Section. |

# 1.3 MACHINE CONFIGURATION

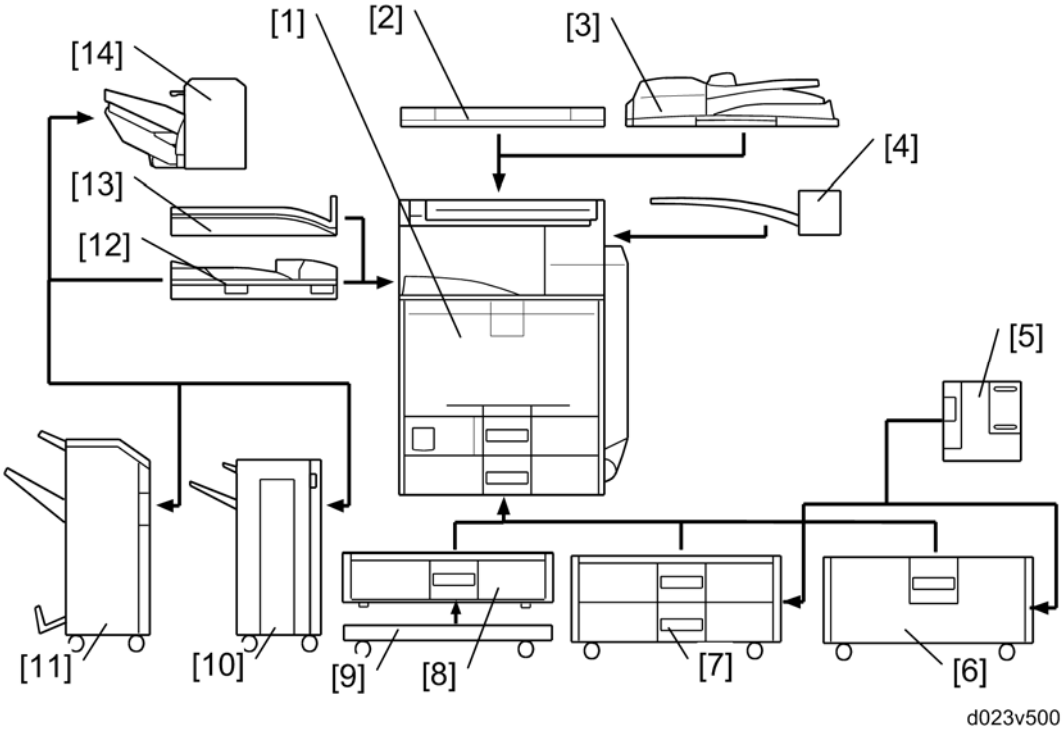


| Item | Machine Code | Call out | Remarks |
|---|---|---|---|
| Mainframe | D023/D025 | [1] | - |
| Platen Cover | G329 | [2] | One from the two |
| Ardf | D366 | [3] | |
| 500-Sheet Finisher | D372 | [14] | Requires [12] |
| 1000-Sheet Booklet Finisher | B793 | [11] | One from [10], [11] and [14]; Requires [12] one from [6] and [7] |
| Punch Unit: 3/2 Holes | B807-17 | - | Requires [11] |
| Punch Unit: 4/2 Holes | B807-27 | - | Requires [11] |

| Item | Machine Code | Call out | Remarks |
|---|---|---|---|
| Punch Unit: 4 Holes | B807-30 | - | Requires [11] |
| 1000-Sheet Finisher | B408 | [10] | One from [10], [11], and [14]; Requires [13] one from [6] and [7] |
| 2000-Sheet LCT | D352 | [6] | One from the three;<br>The one-tray PFU requires [9]. |
| Two-Tray Paper Feed Unit | D351 | [7] | |
| One-Tray Paper Feed Unit | D387 | [8] | |
| Caster Table | D446 | [9] | - |
| 1200-Sheet LCT | D353 | [5] | Requires [6] or [7] |
| 1-Bin Tray | D414 | [4] | - |
| Shift Tray | D388 | [13] | One from the two |
| Bridge Unit | D386 | [12] | |

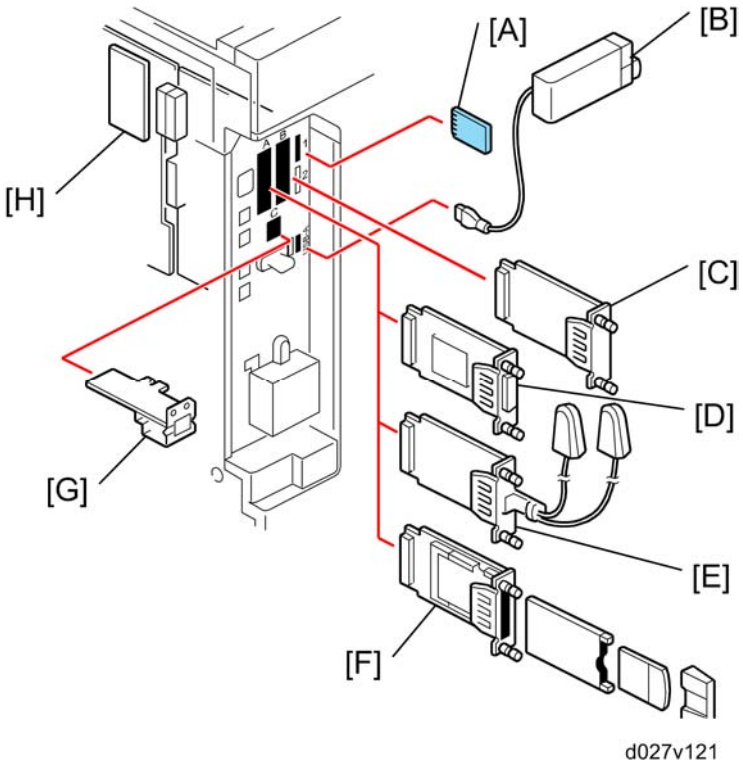


| Item | Machine code | Call out | Remark |
|---|---|---|---|
| USB2.0/SD Slot | D422-01 | [B] | - |
| Gigabit Ethernet | D377-21 | [G] | - |
| IEEE 1284 | B679-17 | [D] | You can only install one of these at a time. |
| Wireless LAN (IEEE 802.11a/g) | D377-01 (NA)<br>D377-02 (EU/AA) | [E] | |
| Wireless LAN (IEEE 802.11g) | D377-19 | | |
| Bluetooth | B826-17 | [F] | |
| File Format Converter | D377-04 | [C] | - |
| Copy Data Security Unit | B829-07 | [H] | - |
| PostScript 3 | D413-13 (NA)<br>D413-14 (EU<br>D413-12 (AA) | [A] | You can only install one of these in SD slot 1 at a time |

| | | | |
|---|---|---|---|
| DataOverwriteSecurity Unit | D377-06 | | |
| PictBridge | D413-04 | | |
| VM Card | D430-01 (NA)<br>D430-02 (EU)<br>D430-03 (AA) | - | In SD card slot 2 |
| Browser Unit | D403-05 (NA)<br>D403-06 (EU)<br>D403-07 (AA) | - | |
| HDD Encryption Unit | D377-16 | - | |

# 1.4 GUIDANCE FOR THOSE WHO ARE FAMILIAR WITH PREDECESSOR PRODUCTS

Machine D023/D025 is a successor model to Machine B230/B237. If you have experience with the predecessor products, the following information will be of help when you read this manual.

Different Points from Predecessor Products

| | D023/D025 | B230/B237 |
|---|---|---|
| Basic PM Interval | 120K prints | 80K prints |
| PM Operation for PCU | New steps were added to the replacement procedure for the drum unit<br>▪ Turn the development roller counterclockwise.<br>▪ Do SP 1902-001. | - |
| PCU Drive Mechanism | Drum/development drive motor and development clutch for each color<br>(AP type) | K: Drum/development drive motor and development clutch<br>CMY: Drum drive motor and development drive motor for all colors |
| Duplex Mechanism | Paper is inverted inside the unit (AP type). | Paper is inverted using the inverter tray of the mainframe. |
| SD Card Slots | 2 slots | 3 slots |
| Location of Firmware for Printer, Scanner, Netfile, NIB, WebDocBox, WebSys, and DESS | Flash ROM on the controller board | Printer/scanner SD card |

# INSTALLATION

| SECTION 2 INSTALLATION | | |
|---|---|---|
| **Page** | **Date** | **Added/Updated/New** |
| 116 ~ 118 | 6/14/2011 | Browser Unit |
| 116 | 10/13/2011 | Important note Browser Unit |

# 2. INSTALLATION

## 2.1 INSTALLATION REQUIREMENTS

### 2.1.1 ENVIRONMENT

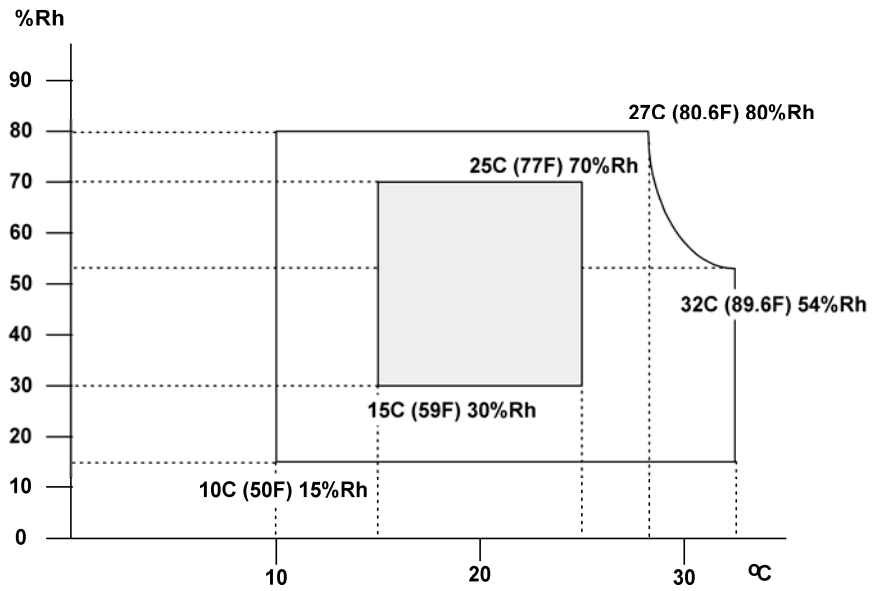


1. Temperature Range: 10°C to 32°C (50°F to 89.6°F)
2. Humidity Range: 15% to 80% RH
3. Ambient Illumination: Less than 1500 lux (do not expose to direct sunlight)
4. Ventilation: 3 times/hr/person or more
5. Do not let the machine get exposed to the following:
   1) Cool air from an air conditioner
   2) Heat from a heater
6. Do not install the machine in areas that are exposed to corrosive gas.
7. Install the machine at locations lower than 2,500 m (8,200 ft.) above sea level.
8. Install the machine on a strong, level base. (Inclination on any side must be no more than 5 mm.)
9. Do not install the machine in areas that get strong vibrations.

### 2.1.2 MACHINE LEVEL

Front to back: Within 5 mm (0.2")

Right to left: Within 5 mm (0.2")

## 2.1.3 MACHINE SPACE REQUIREMENTS

**CAUTION**

- This machine, which uses high voltage power sources, can generate ozone gas. High ozone density is harmful to human health. Therefore, the machine must be installed in a well-ventilated room.

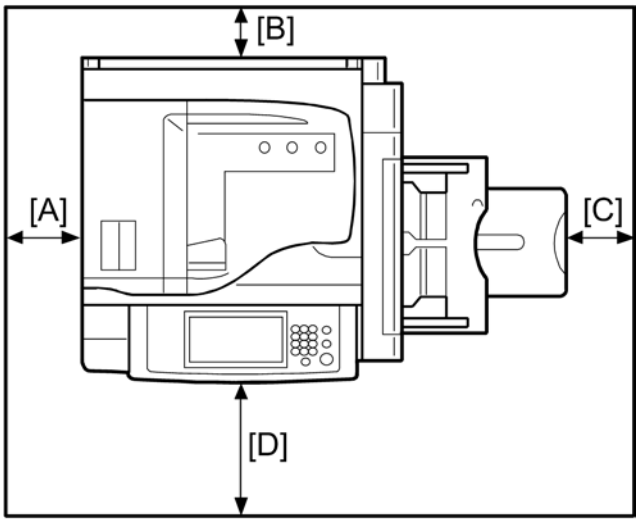


b222i109a

A: Over 100 mm (3.9")

B: Over 100 mm (3.9")

C: Over 550 mm (21.7")

D: Over 750 mm (29.5")

Put the machine near the power source with the clearance shown above.

## 2.1.4 POWER REQUIREMENTS

**CAUTION**

- Insert the plug firmly in the outlet.
- Do not use an outlet extension plug or cord.
- Ground the machine.

1. Input voltage level:

   120 V, 60 Hz: More than 12 A

   220 V to 240 V, 50 Hz/60 Hz: More than 8 A
2. Permissible voltage fluctuation: ±10 %
3. Do not put things on the power cord.

# 2.2 OPTIONAL UNIT COMBINATIONS

## 2.2.1 MACHINE OPTIONS

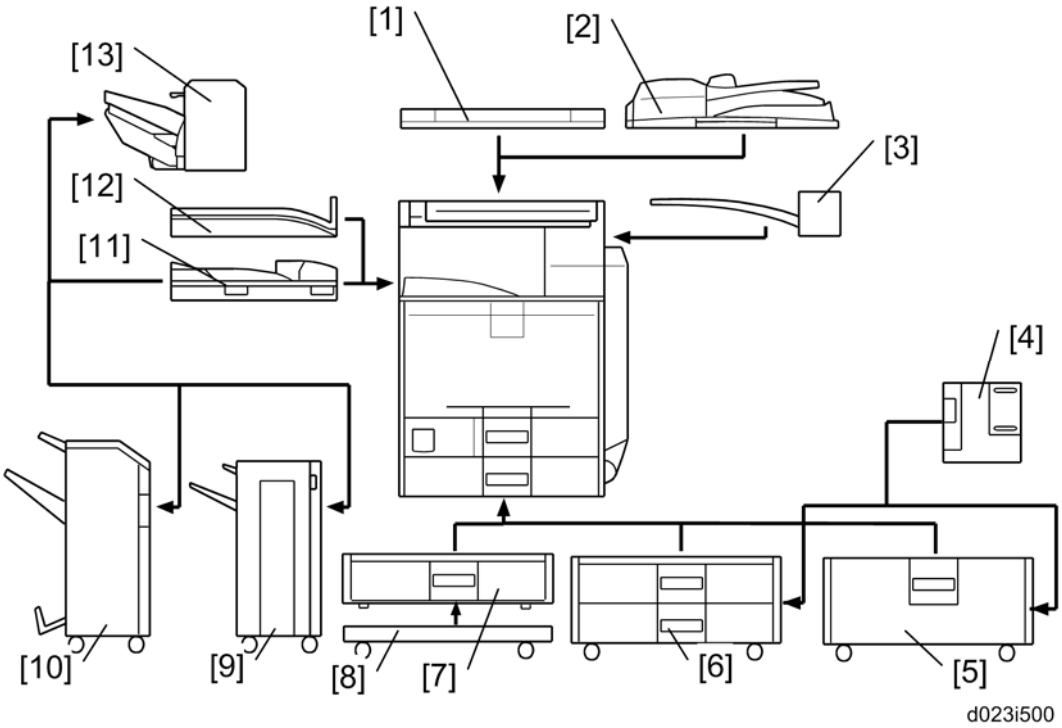


| No. | Options | Remarks |
|---|---|---|
| 1 | Platen Cover | One from No.1 or No.2 |
| 2 | ARDF | |
| 3 | 1-Bin Tray Unit | - |
| 4 | 1200-Sheet LCT | Requires No.5 and No.6 |
| 5 | Large Capacity Tray | One from No.5, No.6 or No.7<br>No.7 requires No. 8 |
| 6 | Two-Tray Paper Feed Unit | |
| 7 | One-Tray Paper Feed Unit | |
| 8 | Caster Table | - |

| | | |
|---|---|---|
| 9 | 1000-Sheet Finisher | One from No.9, No.10 or No.13; Requires No.11 and one from No.6 and No.7 |
| 10 | 1000-Sheet Booklet Finisher | |
| 11 | Bridge Unit | One from No.11 or No.12 |
| 12 | Shift Tray | |
| 13 | 500-Sheet Finisher | Requires No.11 |

*: Child options (Child options require a parent option.)

## 2.2.2 CONTROLLER OPTIONS

| No. | Options | Remarks |
|---|---|---|
| 1 | Bluetooth | One from the three (I/F Slot A) |
| 2 | IEEE 802.11a/b, g | |
| 3 | IEEE 1284 | |
| 4 | File Format Converter | I/F Slot B |
| 5 | Gigabit Ethernet | I/F Slot C |
| 6 | PostScript 3 | One from the three (SD card slot 1) |
| 7 | PictBridge Option | |
| 8 | Data Overwrite Security Unit | |
| 9 | Browser Unit | SD card slot 2 (during installation only) |
| 10 | VM Card | SD card slot 2 |
| 11 | HDD Encryption Unit | SD card slot 2 (during installation only) |

## 2.2.3 FAX OPTIONS

| No. | Options | Remarks |
|---|---|---|
| 1 | Fax Option Type C5000 | - |
| 2 | *Hand Set Type 1018 | Requires No.1. (NA Only) |
| 3 | G3 Interface Unit Type C5000 | - |

*: Child options (Child options require a parent option.)

## 2.2.4 OTHER OPTIONS

| No. | Options | Remarks |
|---|---|---|
| 1 | Copy Data Security Unit | - |
| 2 | Optional Counter Interface Unit | - |
| 3 | USB2.0/SD Slot | - |

## 2.3 COPIER INSTALLATION

**⚠CAUTION**

- Make sure that the image transfer belt is in its correct position (away from the PCUs) before you move the machine. Otherwise, the image transfer belt and the black PCU can be damaged.

### 2.3.1 POWER SOCKETS FOR PERIPHERALS

**⚠CAUTION**

- Rating voltage for peripherals.
- Make sure to plug the cables into the correct sockets.

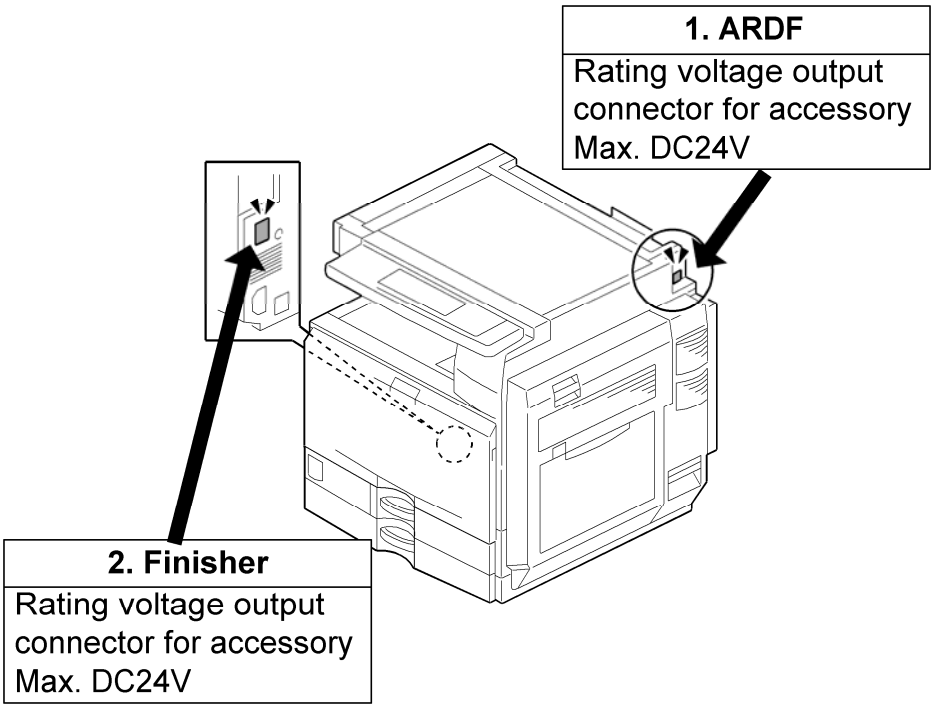

## 2.3.2 INSTALLATION FLOW CHART

This flow chart shows the best procedure for installation.

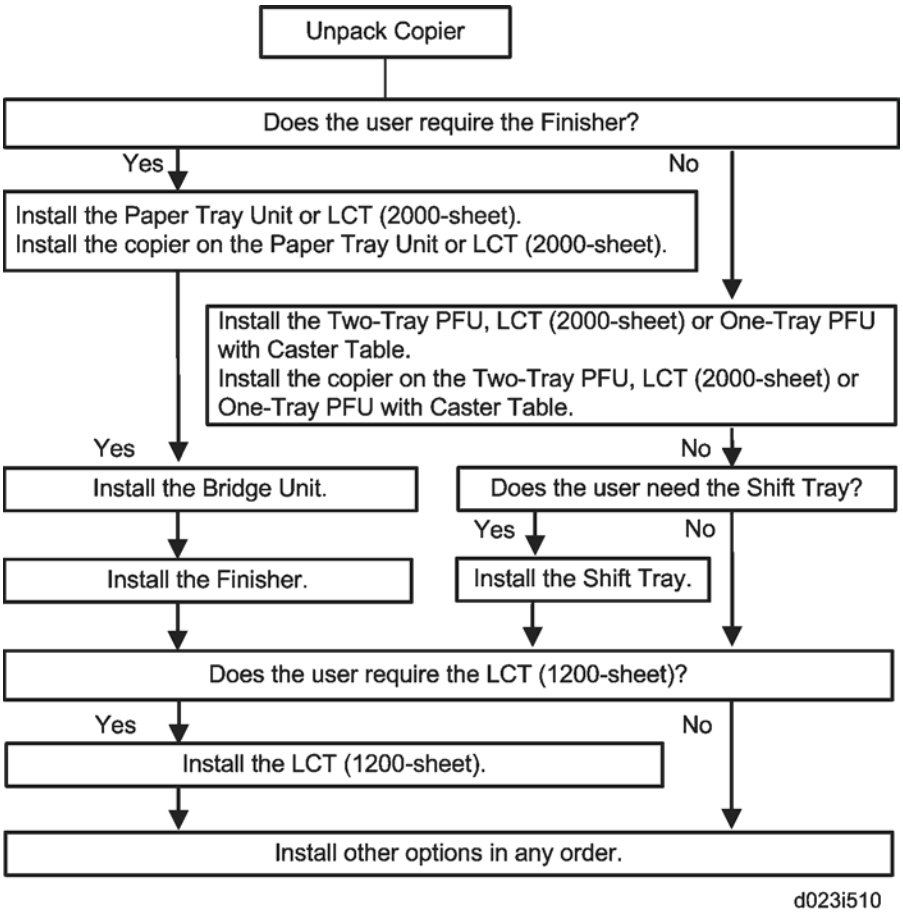


You need the optional paper tray unit or the LCT if you want to install the finisher (B408, B804 or B805).

The punch unit is for 2000-sheet booklet finisher (B804) and 3000-sheet finisher (B805).

## 2.3.3 INSTALLATION PROCEDURE

**CAUTION**

- Remove the tape from the development units before you turn the main switch on. The development units can be severely damaged if you do not remove the tape.

Put the machine on the paper tray unit or the LCT first if you install an optional paper tray unit or the optional LCT at the same time. Then install the machine and other options.

**Note**

- Keep the shipping retainers after you install the machine. You may need them in the future if you transport the machine to another location.

### *Tapes and Retainers*

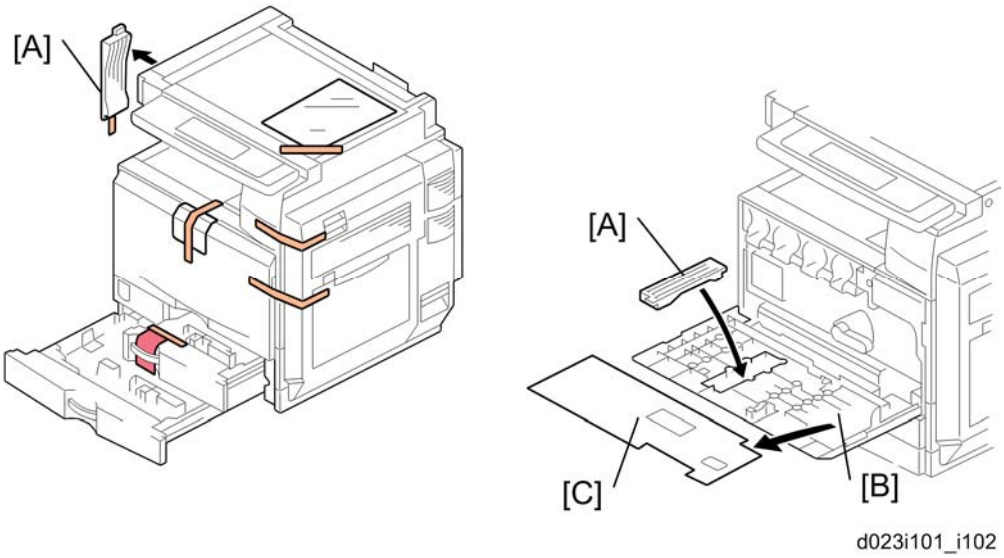


1. Remove all the tapes and retainers on the machine.
2. Remove all the tapes and retainers in trays 1 and 2, and then take out the power cord from tray 1 (if applicable).
3. Remove the scanner unit stay [A].
4. Open the front door [B], and then remove the jam location sheet [C].
5. Keep the scanner unit stay [A] inside the front door [B].
6. Reattach the jam location sheet.
7. Close the front door.

### *Developer and Toner Bottles*

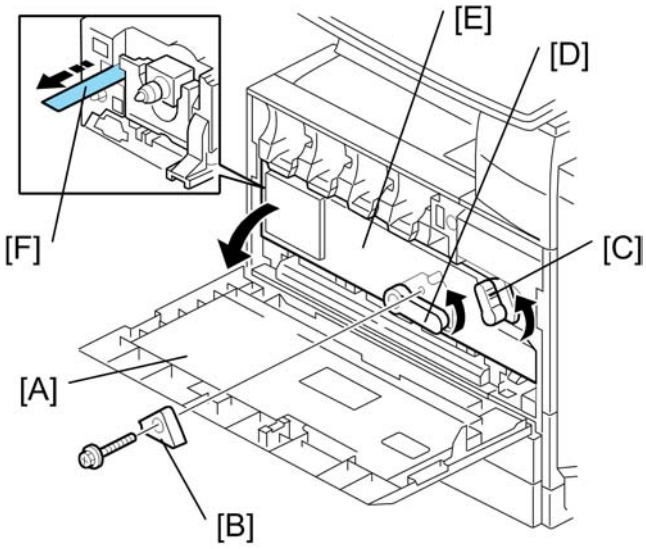


d027i106

1. Open the front door [A].
   - GSA model (-57) and EU models (-27) do not require steps from 2 to 7. Skip to step 8 if you install these models.
2. Remove the stopper [B] (🖉 x 1).

   Note

   - This stopper locks the drum positioning plate lever.
3. Release the image transfer unit lock lever [C], and turn the drum positioning plate lever [D] counterclockwise.
4. Open the drum positioning plate [E].
5. Remove all tapes [F] from the four development units.

   Note

   - When you remove the tape from the development unit, hold the development unit with your hand, and then pull the tape.
6. Close the drum positioning plate. Then lock the image transfer unit lock and turn the drum positioning plate lever clockwise.
7. Lock the drum positioning plate lever with the stopper [B] (🖉 x 1).
8. Shake each toner bottle five or six times.

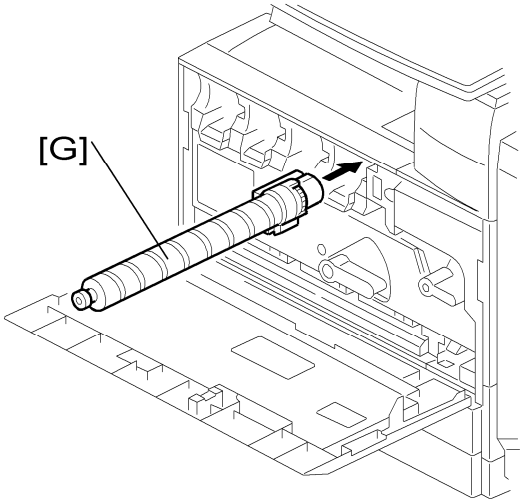


9. Install each toner bottle [G] in the machine.
10. Close the front door.

### *Paper Trays*

1. Pull each paper tray out. Then adjust the side guides and end guide to match the paper size.

Note

- To move the side guide, first pull out the tray fully. Then push down the green lock at the rear inside the tray.

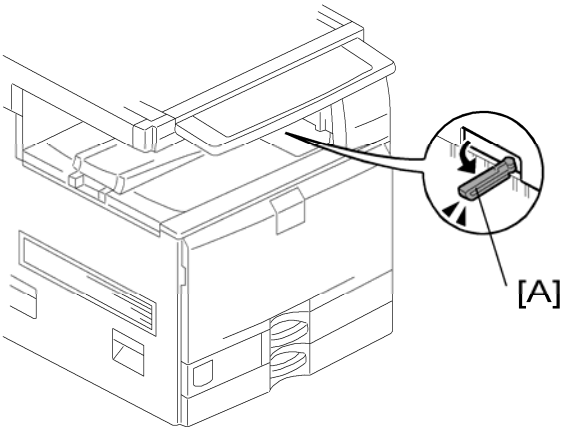


2. Pull out the feeler [A] for the output tray full detection mechanism.

## *Emblem and Decals*

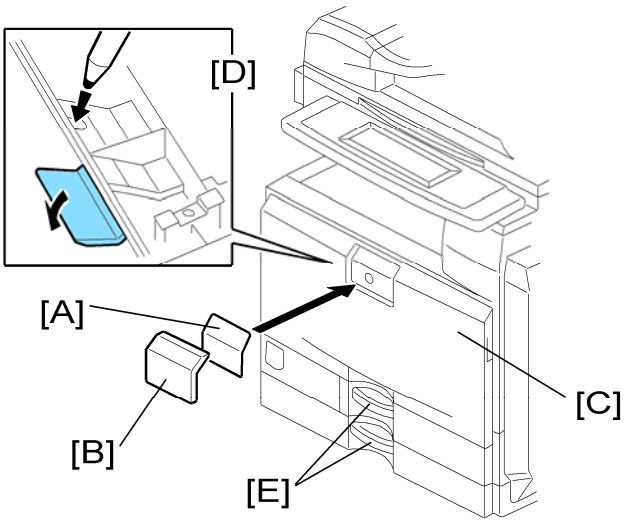


1. Attach the correct emblem [A] and the cover [B] to the front door [C] of the machine, if the emblem is not attached.

   Note

   - If you want to change the emblem that has been already attached, remove the panel with an object (not a sharp object) as shown [D], and then install the correct emblem.

2. Attach the correct paper tray number and size decals to the paper trays [E].

   Note

   - Paper tray number and size decals are also used for the optional paper tray or the optional LCT. Keep these decals for use with these optional units.

## *Manual Pocket Attachment*

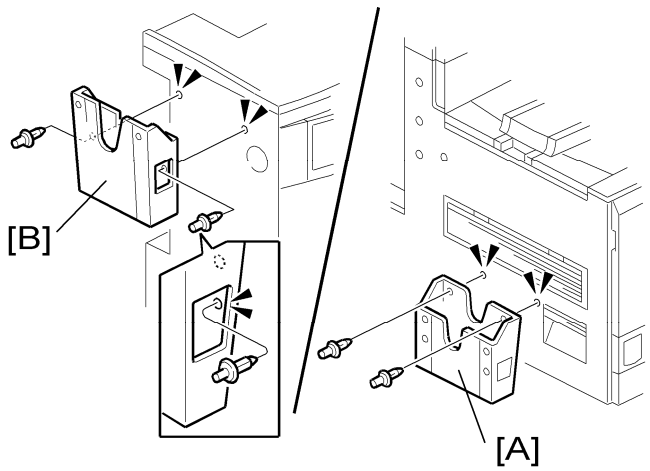

1. Attach the manual pocket [A] to the left side of the copier (snap rivet x 2).
2. If a finisher has been installed, attach the manual pocket [B] to the rear side of the finisher (snap rivet x 2).

### *Initialize the Developer*

1. Plug in the machine.
2. Make sure that the platen or ARDF is closed and the main power is turned off.
3. Turn the main power switch on. The machine automatically starts the initialization procedure. The Start button LED (⊛) turns green when this procedure has finished.
4. Make copies of image samples (text, photo, and text/photo modes).
5. Do the Automatic Color Calibration process (ACC) as follows:
   1). Print the ACC test pattern (User tools > Maintenance > ACC > Start).
   2). Put the printout on the exposure glass.
   3). Put 10 sheets of white paper on top of the test chart.
   4). Close the ARDF or the platen cover.
   5). Press “Start Scanning” on the LCD panel. The machine starts the ACC.
6. Check that the sample image has been copied normally.

### *Settings Relevant to the Service Contract*

Change the necessary settings for the following SP modes if the customer has made a service contract.

Note

- You must select one of the counter methods (developments/prints) in accordance with the contract (☛ SP5-045-001).

| Item | SP No. | Function | Default |
|---|---|---|---|
| Counting method | SP5-045-001 | Specifies if the counting method used in meter charge mode is based on developments or prints. NOTE: You can set this one time only. You cannot change the setting after you have set it for the first time. | “0”: Developments |
| A3/11" x 17" | SP5-104-001 | Specifies whether the counter is | “No”: Single |

| | | | |
|---|---|---|---|
| double counting | | doubled for A3/11" x 17" paper. When you have to change this setting, contact your supervisor. | counting |
| Service Tel. No. Setting | SP5-812-001 through 004 | 5812-002 programs the service station fax number. The number is printed on the counter list when the meter charge mode is selected. This lets the user fax the counter data to the service station. | |



## *Settings for @Remote Service*

Note

- Prepare and check the following check points before you visit the customer site. For details, ask the @Remote key person.

**Check points before making @Remote settings**

1. The setting of SP5816-201 in the mainframe must be "0".
2. Device ID2 (SP5811-003) must be correctly programmed.
   - 6 spaces must be put between the 3-digit prefix and the following 8-digit number (e.g. xxx_____xxxxxxxx).
   - ID2 (SP5811-003) and the serial number (SP5811-001) must be the same (e.g. ID2: A01_____23456789 = serial No. A0123456789)
3. The following settings must be correctly programmed.
   - Proxy server IP address (SP5816-063)
   - Proxy server Port number (SP5816-064)
   - Proxy User ID (SP5816-065)
   - Proxy Password (SP5816-066)
4. Get a Request Number

**Execute the @Remote Settings**

1. Enter the SP mode.
2. Input the Request number which you have obtained from @Remote Center GUI, and then enter [OK] with **SP5816-202**.
3. Confirm the Request number, and then click [EXECUTE] with **SP5816-203**.
4. Check the confirmation result with **SP5816-204**.

| Value | Meaning | Solution/ Workaround |
|---|---|---|
| 0 | Succeeded | - |
| 1 | Request number error | Check the request number again. |
| 3 | Communication error (proxy enabled) | Check the network condition. |
| 4 | Communication error (proxy disabled) | Check the network condition. |
| 5 | Proxy error (Illegal user name or password) | Check Proxy user name and password. |
| 6 | Communication error | Check the network condition. |
| 8 | Other error | See "SP5816-208 Error Codes" below this. |
| 9 | Request number confirmation executing | Processing… Please wait. |

5. Make sure that the screen displays the Location Information with **SP5816-205** only when it has been input at the Center GUI.
6. Click [EXECUTE] to execute the registration with **SP5816-206**.
7. Check the registration result with **SP5816-207**.

| Value | Meaning | Solution/ Workaround |
|---|---|---|
| 0 | Succeeded | - |
| 1 | Request number error | Check the request number again. |
| 2 | Already registered | Check the registration status. |
| 3 | Communication error (proxy enabled) | Check the network condition. |
| 4 | Communication error (proxy disabled) | Check the network condition. |

| Value | Meaning | Solution/ Workaround |
|---|---|---|
| 5 | Proxy error (Illegal user name or password) | Check Proxy user name and password. |
| 8 | Other error | See "SP5816-208 Error Codes" below this. |
| 9 | Request number confirmation executing | Processing… Please wait. |



8. Exit the SP mode.

**SP5816-208 Error Codes**

| Cause | Code | Meaning | Solution/ Workaround |
|---|---|---|---|
| Operation Error, Incorrect Setting | -12002 | Inquiry, registration attempted without acquiring Request No. | Obtain a Request Number before attempting the Inquiry or Registration. |
| | -12003 | Attempted registration without execution of a confirmation and no previous registration. | Perform Confirmation before attempting the Registration. |
| | -12004 | Attempted setting with illegal entries for certification and ID2. | Check ID2 of the mainframe. |
| | -12005 | @Remote communication is prohibited. The device has an Embedded RC gate-related problem. | Make sure that "Remote Service" in User Tools is set to "Do not prohibit". |
| | -12006 | A confirmation request was made after the confirmation had been already completed. | Execute registration. |
| | -12007 | The request number used at registration was different from the one used at confirmation. | Check Request No. |

| Cause | Code | Meaning | Solution/ Workaround |
|---|---|---|---|
| | -12008 | Update certification failed because mainframe was in use. | Check the mainframe condition. If the mainframe is in use, try again later. |
| Error Caused by Response from GW URL | -2385 | Other error | |
| | -2387 | Not supported at the Service Center | |
| | -2389 | Database out of service | |
| | -2390 | Program out of service | |
| | -2391 | Two registrations for the same mainframe | Check the registration condition of the mainframe |
| | -2392 | Parameter error | |
| | -2393 | External RCG not managed | |
| | -2394 | Mainframe not managed | |
| | -2395 | Box ID for external RCG is illegal. | |
| | -2396 | Mainframe ID for external RCG is illegal. | |
| | -2397 | Incorrect ID2 format | Check the ID2 of the mainframe. |
| | -2398 | Incorrect request number format | Check the Request No. |

## 2.3.4 MOVING THE MACHINE

This section shows you how to manually move the machine from one floor to another floor. See the section “Transporting the Machine” if you have to pack the machine and move it a longer distance.

1. Remove all trays from the optional paper feed unit or LCT.

## 2.3.5 TRANSPORTING THE MACHINE

**Main Frame**

1. Do SP 4806-001 to move the scanner carriage from the home position. This prevents dust from falling into the machine during transportation.
2. Remove the toner cartridges. This prevents toner flow into the toner supply tube, which is caused by vibration during transport. This can also cause the tube to be clogged with toner.
3. Make sure there is no paper left in the paper trays. Then fix down the bottom plates with a sheet of paper and tape.
4. Empty the toner collection bottle. Then attach securing tape to stop the toner bottle from coming out.
5. Do one of the following:
   - Attach shipping tape to the covers and doors.
   - Shrink-wrap the machine tightly.

Note

- After you move the machine, make sure you do the "Auto Color Registration" as follows. This optimizes color registration.
- 1. Do the "Forced Line Position Adj. Mode c" (SP2-111-3).
- 2. Then do the "Forced Line Position Adj. Mode a" (SP2-111-1).
  To check if SP 2-111-1 was successful, watch the screen during the process. A message is displayed at the end. Also, you can check the result with SP 2-194-10 to -12.
- Make sure that the side fences in the trays are correctly positioned to prevent color registration errors.

# 2.4 ONE-TRAY PAPER FEED UNIT (D387)

## 2.4.1 ACCESSORY CHECK

Check the quantity and condition of the accessories against the following list.

| No. | Description | Q'ty |
|---|---|---|
| 1 | Securing Bracket | 2 |
| 2 | Screw (M4x10) | 2 |
| 3 | Spring Washer Screw | 1 |
| 4 | Knob Screw | 3 |

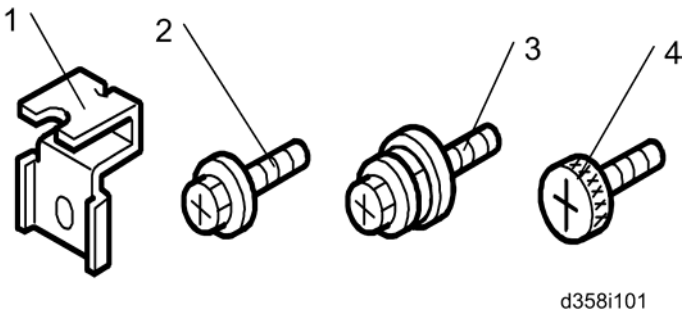

## 2.4.2 INSTALLATION PROCEDURE

**CAUTION**

- Turn off the main switch of the copier and unplug the power cord before you start the installation procedure.
- You need two or more persons to lift the copier. The copier is highly unstable when lifted by one person, and may cause human injury or property damage.
- Do not lift the copier with the paper feed unit installed. The handle and grips may be damaged.

**Note**

- The one-tray paper feed unit must be installed on the caster table (D446). Prepare the caster table first before installing this unit.

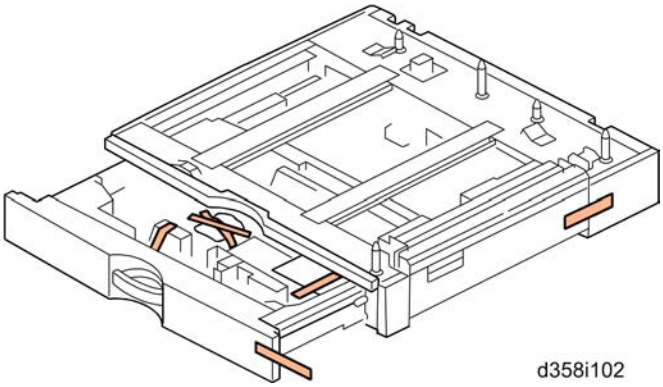


1. Remove all tape on the paper feed unit.
2. Remove the paper tray and remove all tapes and padding.

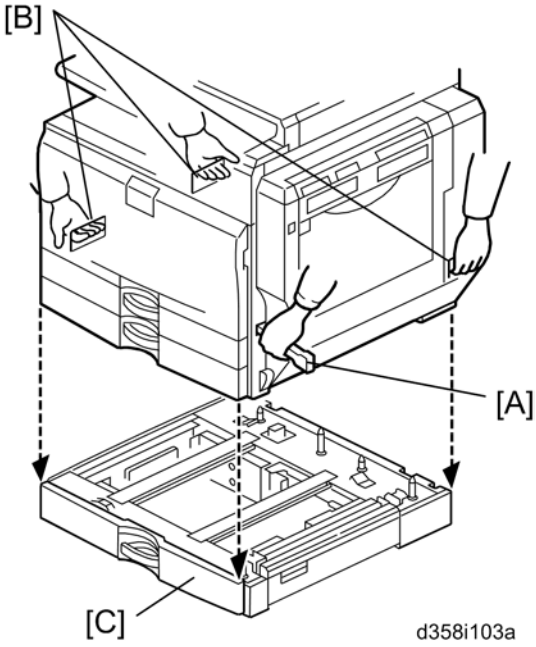

3. Grasp the handle [A] and grips [B] of the machine.
4. Lift the copier and install it on the paper feed unit [C].

Note

- Hold the handle and grips of the machine when you lift and move the machine.

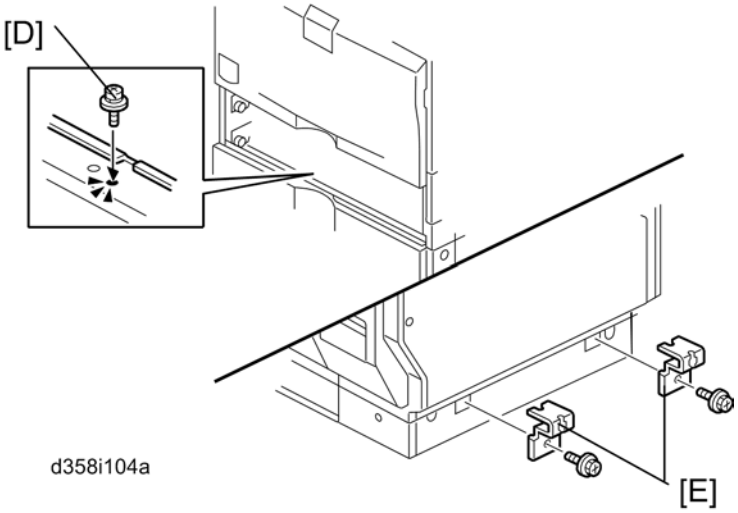


5. Remove tray 1 and 2 of the machine.
6. Fasten the spring washer screw [D].
7. Reinstall all trays.
8. Attach the securing brackets [E] (M4x10; x 1 each).

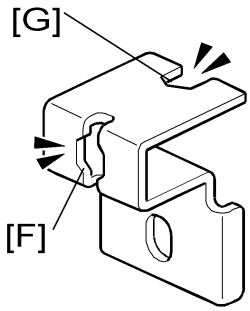


Note

- One of the securing brackets is used as a securing tool (the cutout [F] is used in step 6). But the cutout [G] is for attaching the tray heater. Therefore, attach the securing brackets [E] after installing the tray heater if you install the tray heater.

9. Load paper into the paper feed unit.
10. Turn on the main power switch of the machine.
11. Check the paper feed unit operation and copy quality.

# 2.5 CASTER TABLE (D446)

## 2.5.1 COMPONENT CHECK

| No. | Description | Q'ty |
|---|---|---|
| 1 | Caster Table | 1 |
| 2 | Stud Screw | 1 |

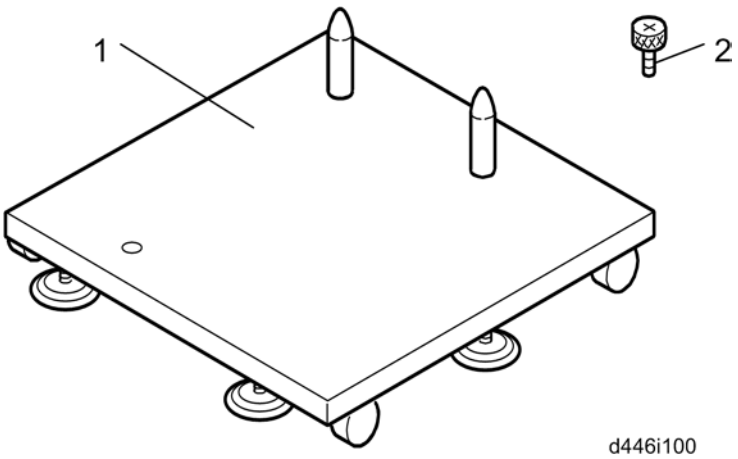


## 2.5.2 INSTALLATION PROCEDURE

1. Put the caster table on a flat place.

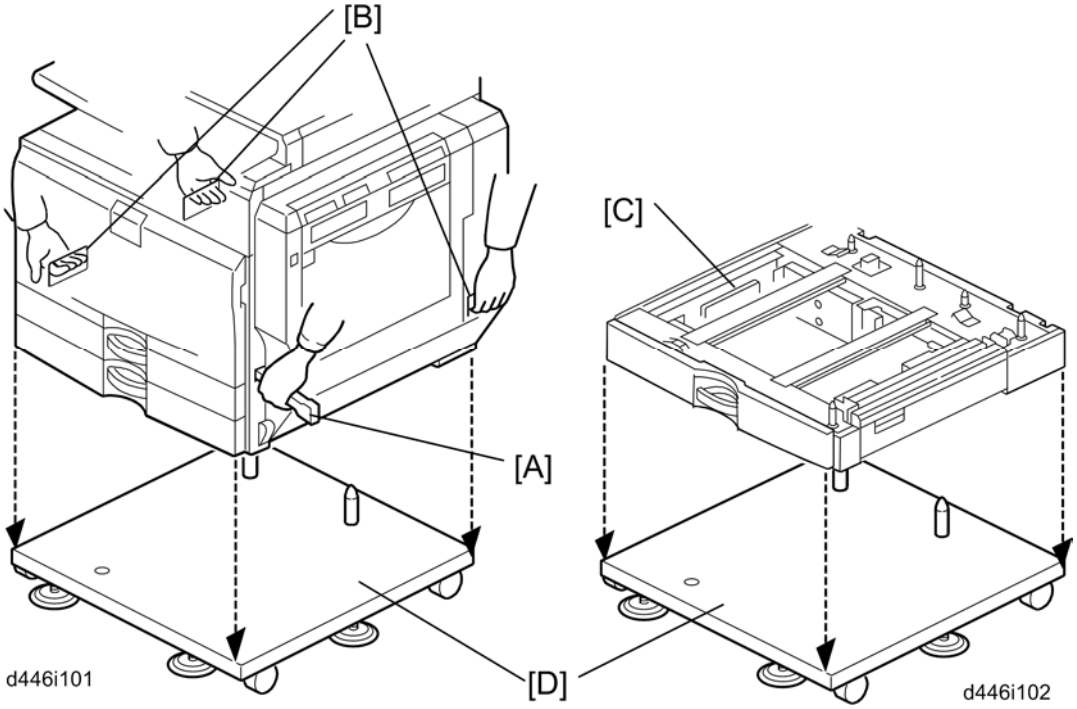


2. Grasp the handle [A] and grips [B] of the machine, if the copier is to be installed on the caster table.
3. Lift the copier or one-tray paper feed unit [C], and then install it on the caster table [D].

Note

- Hold the handle and grips of the machine when you lift and move the machine.

4. Pull out tray 2 of the mainframe or the tray of the one-tray paper feed unit.

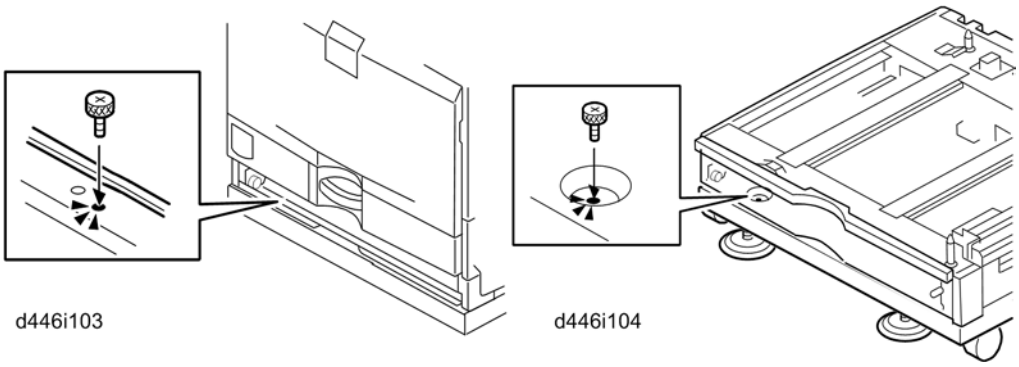


5. Secure the machine or one-tray paper feed unit to the caster table (stud screw x 1)
6. Reinstall the tray in the mainframe or one-tray paper feed unit.
7. Adjust the five leveling adjustors of the caster table.

# 2.6 PAPER FEED UNIT INSTALLATION (D351)

## 2.6.1 ACCESSORY CHECK

Check the quantity and condition of the accessories against the following list.

| No. | Description | Q'ty |
|---|---|---|
| 1 | Securing Bracket | 2 |
| 2 | Screw (M4x10) | 2 |
| 3 | Spring Washer Screw | 1 |
| 4 | Knob Screw | 3 |

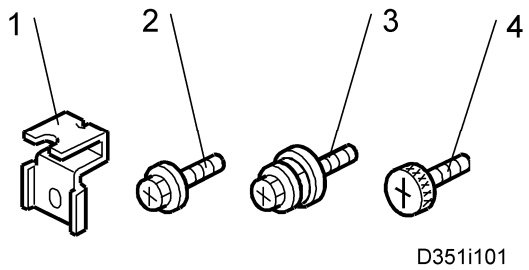

## 2.6.2 INSTALLATION PROCEDURE

**CAUTION**

- Turn off the main switch of the copier and unplug the power cord before you start the installation procedure.
- You need two or more persons to lift the copier. The copier is highly unstable when lifted by one person, and may cause injury or property damage.
- Do not lift the copier with the paper feed unit installed. The handle and grips may be damaged.

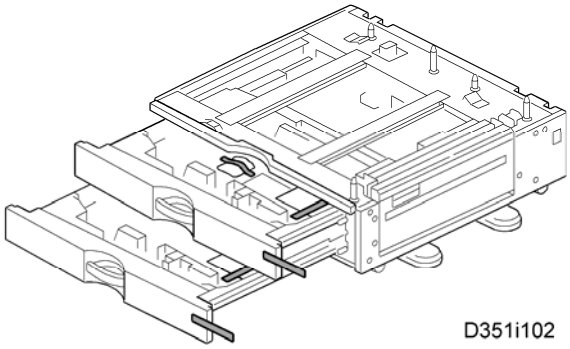


1. Remove all tape on the paper feed unit.
2. Remove the paper trays and remove all tape and padding.

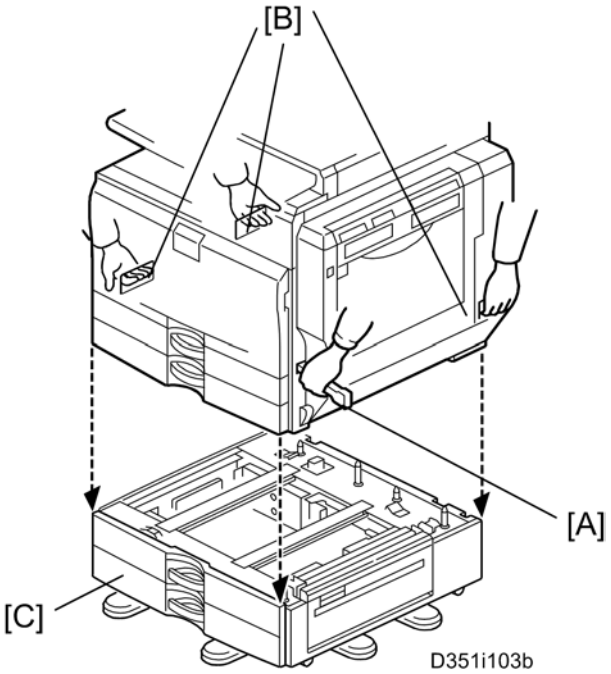


3. Grasp the handle [A] and grips [B] of the machine.

4. Lift the copier and install it on the paper feed unit [C].

Note

- Hold the handle and grips of the machine when you lift and move the machine.

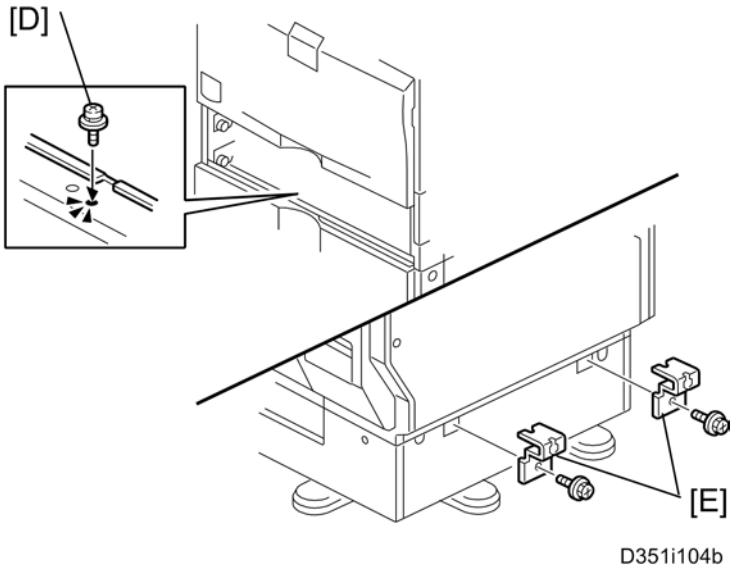


5. Remove trays 1 and 2 of the machine.
6. Fasten the spring washer screw [D].
7. Reinstall all trays.
8. Attach the securing brackets [E] (🔩 x 1 each; M4x10).

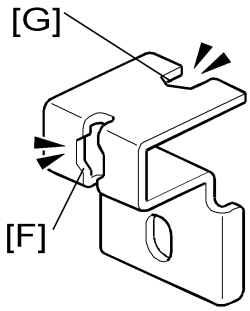


Note

- One of the securing brackets is used as a securing tool (the cutout [F] is used in step 6). But the cutout [G] is for attaching the tray heater. Therefore, attach the securing brackets [E] after installing the tray heater if you install the tray heater.

9. Load paper into the paper feed unit.
10. Turn on the main power switch of the machine.
11. Check the paper feed unit operation and copy quality.

# 2.7 2000-SHEET LCT

## 2.7.1 ACCESSORY CHECK

Check the quantity and condition of the accessories against the following list.

| No. | Description | Q'ty |
|---|---|---|
| 1 | Securing Bracket | 2 |
| 2 | Screw (M4x10) | 2 |
| 3 | Spring Washer Screw | 1 |
| 4 | Knob Screw | 3 |

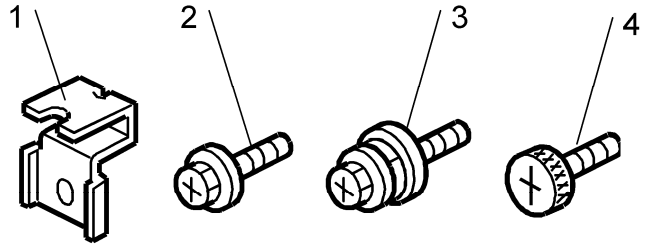


D352i101

## 2.7.2 INSTALLATION PROCEDURE

**CAUTION**

- Turn off the main switch of the copier and unplug the power cord before you start the installation procedure.
- You need two or more persons to lift the copier. The copier is highly unstable when lifted by one person, and may cause injury or property damage.
- Do not lift the copier with the paper feed unit installed. The handle and grips may be damaged.

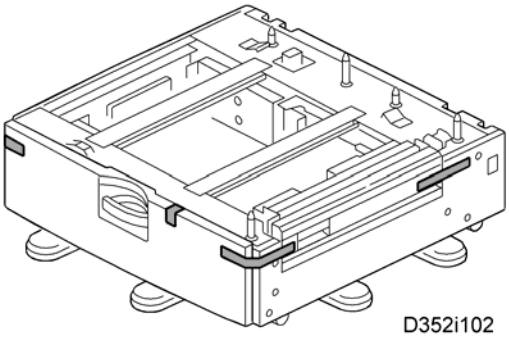


1. Remove all tapes and retainers in the LCT.

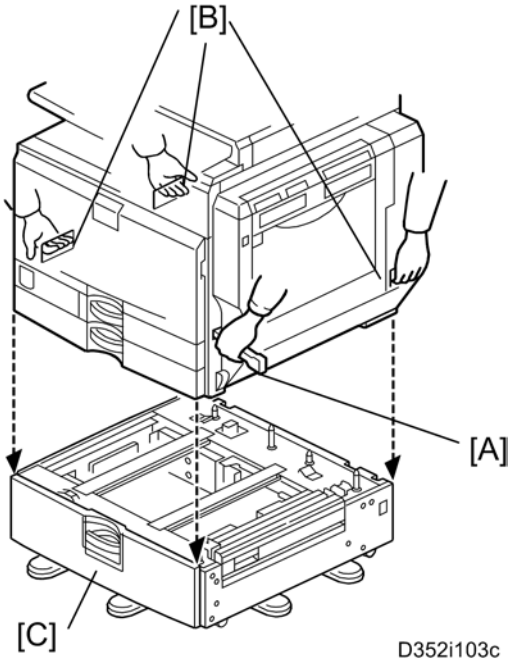


2. Grasp the handle [A] and grips [B] of the machine.
3. Lift the copier and install it on the LCT [C].

Note

- Hold the handle [A] and grips [B] of the machine when you lift and move the machine.

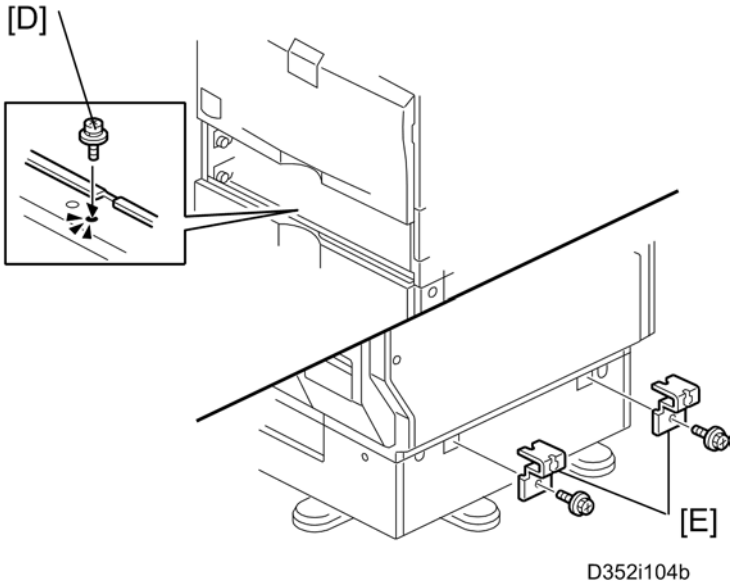


4. Remove trays 1 and 2 of the machine.
5. Fasten the spring washer screw [D].
6. Reinstall all trays.
7. Attach the securing brackets [E] (🔩 x 1 each; M4x10).

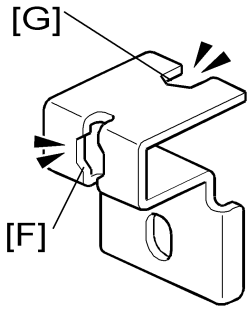


Note

- One of the securing brackets is used as a securing tool (the cutout [F] is used in step 5). But the cutout [G] is for attaching the tray heater. Therefore, attach the securing brackets [E] after installing the tray heater if you install the tray heater.

8. Load paper into the LCT.
9. Turn on the main power switch of the machine.
10. Check the LCT operation and copy quality.

# 2.8 1200-SHEET LCT (D353)

## 2.8.1 COMPONENT CHECK

Check the quantity and condition of the components against the following list.

| No. | Description | Q'ty |
|---|---|---|
| 1 | Front Bracket | 1 |
| 2 | Rear Bracket | 1 |
| 3 | Stud Screw | 4 |
| 4 | Joint Pin | 2 |
| 5 | LCT | 1 |

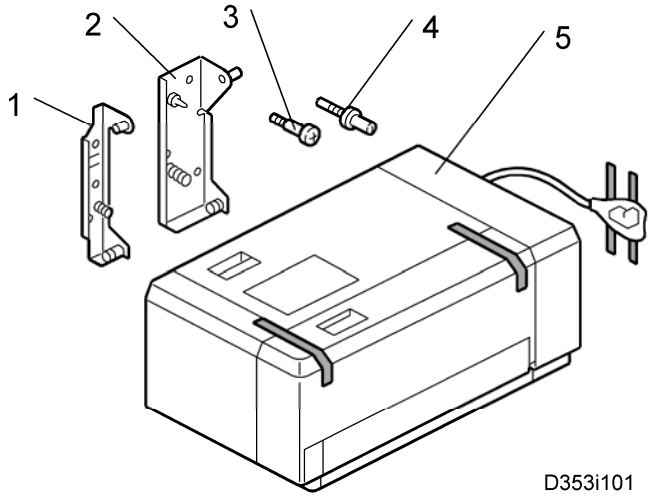

## 2.8.2 INSTALLATION PROCEDURE

**CAUTION**

- Unplug the main machine power cord before starting the following procedure.

Note

- The Paper Tray Unit (D351) or LCT 2000-sheet (D352) must be installed before installing this 1200-sheet LCT.

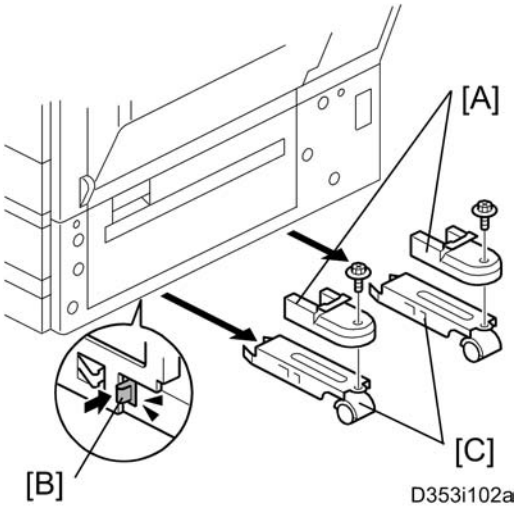


1. Unpack the LCT and remove the tapes.
2. Remove the stand covers [A].
3. Release the locks [B] of the front and rear caster stands.
4. Remove the caster stands [C].

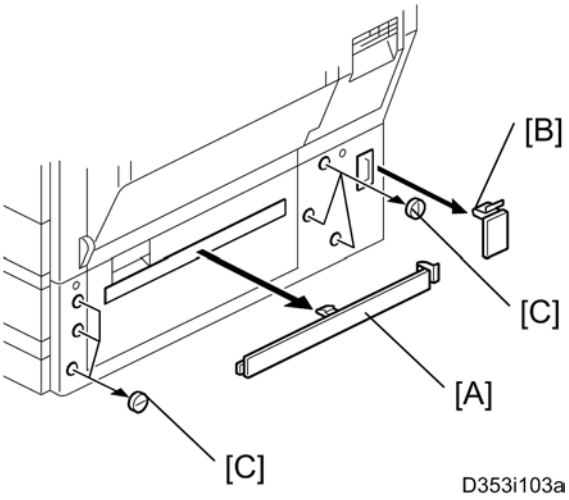


5. Remove the paper path cover [A], connector cover [B] and six hole covers [C].

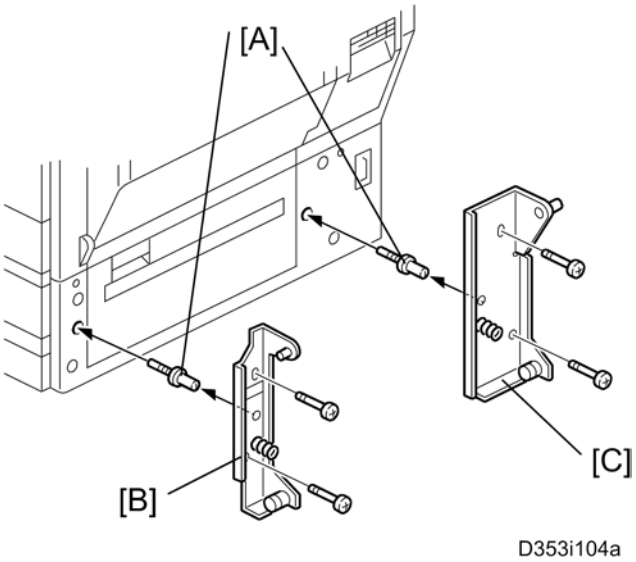


6. Insert the joint pins [A].
7. Attach the front [B] and rear brackets [C].

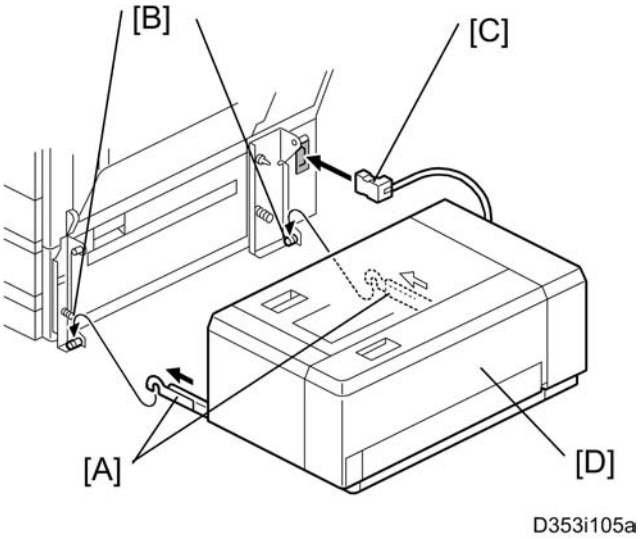


8. Pull out the front and rear rails [A], and then hang them on each bracket [B].
9. Connect the LCT cable [C] to the main machine.
10. Slide the LCT [D] into the main machine.
11. Make sure that the front and rear sides of the LCT are closely attached to the main machine.

## 2.8.3 SIDE FENCE POSITION CHANGE

1. Open the right door of the LCT.
2. Push the down switch to lower the tray bottom plate until it reaches its lowest position.

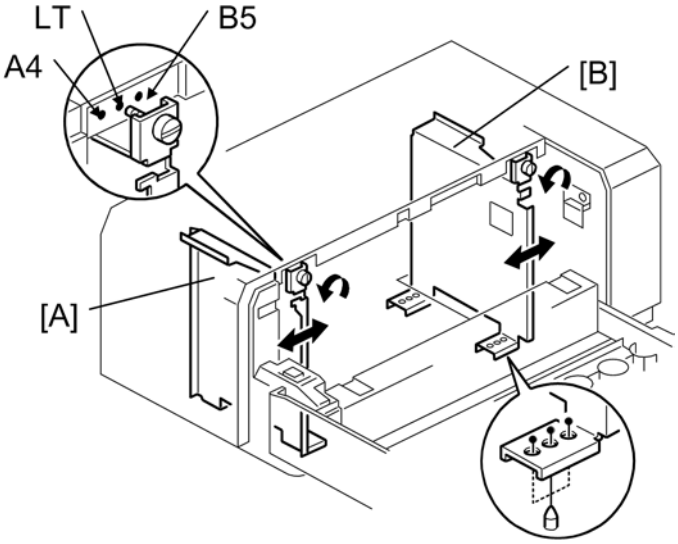


d353i106

3. Remove the front and rear side fences [A, B] (🔩 x 1 each).
4. Install the side fences in the correct position (A4 LEF/ LT LEF/ B5 LEF).

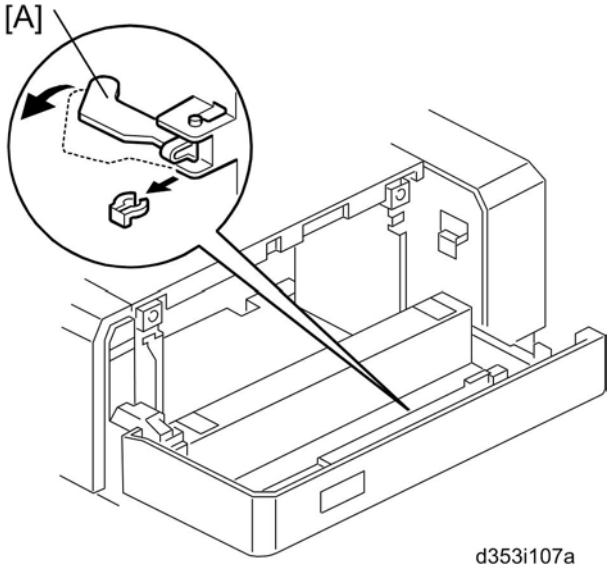


d353i107a

5. Pull the end fence [A] for B5 size paper as shown (🗜 x 1) if the side fences are adjusted for B5 size paper.
6. Close the right door.
7. Turn on the main power switch, and then go into the SP mode.
8. Input the correct paper size for the1200-sheet LCT with SP5181-018.

# 2.9 AUTO REVERSE DOCUMENT FEEDER (D366)

## 2.9.1 COMPONENT CHECK

Check the quantity and condition of the components against the following list.

| No. | Description | Q'ty |
|---|---|---|
| 1 | ARDF | 1 |
| 2 | Stamp Cartridge | 1 |
| 3 | Screwdriver Tool | 1 |
| 4 | Knob Screw | 2 |
| 5 | Stud Screw | 2 |
| 6 | Attention Decal – Top Cover | 1 |

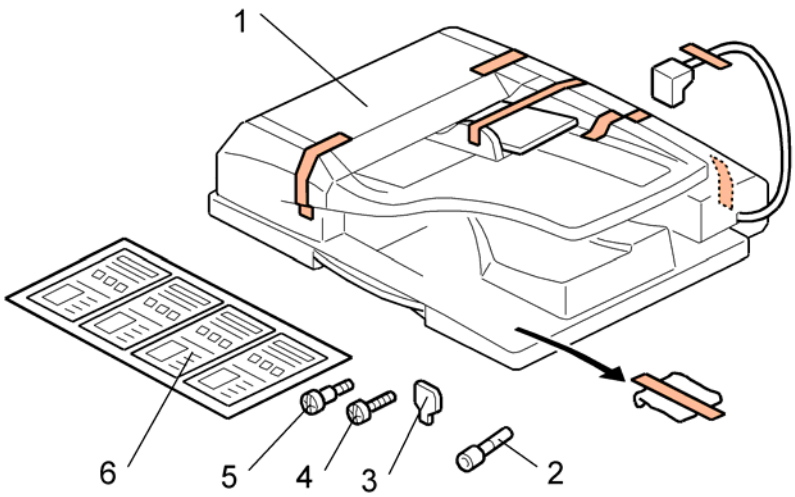

## 2.9.2 INSTALLATION PROCEDURE

**CAUTION**

- Unplug the copier power cord before starting the following procedure.

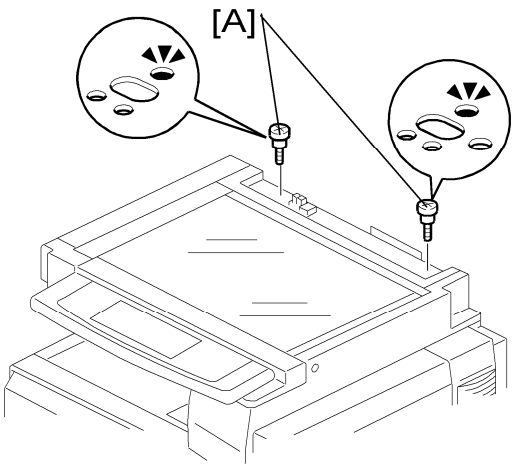


1. Remove all tapes and shipping retainers.
2. Remove the two screws already installed at the top rear of the machine.
3. Insert the two stud screws [A] on the top of the machine.

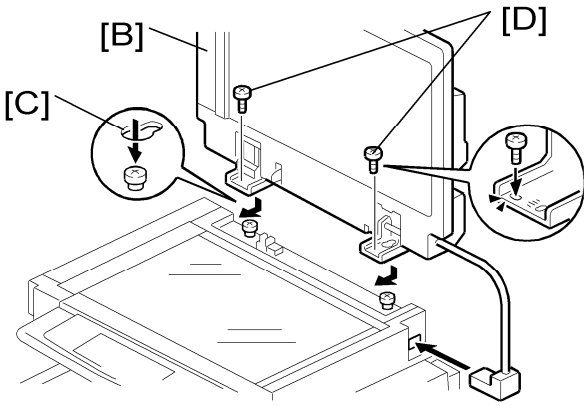


4. Mount the ARDF [B] by aligning the screw keyholes [C] in the ARDF support plate over the stud screws.
5. Slide the ARDF toward the front of the machine.
6. Secure the ARDF with the two knob screws [D].

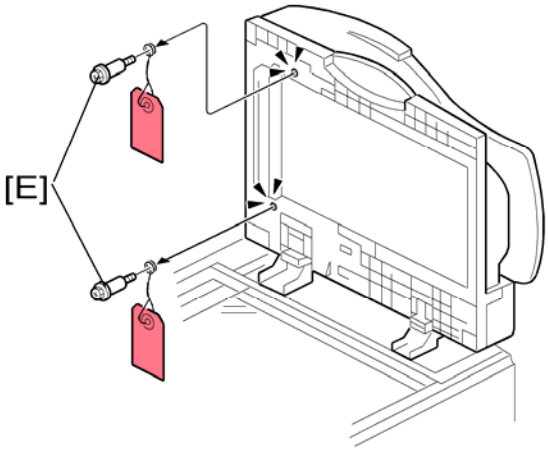


7. Remove two screws [E] from the bottom of the ARDF.

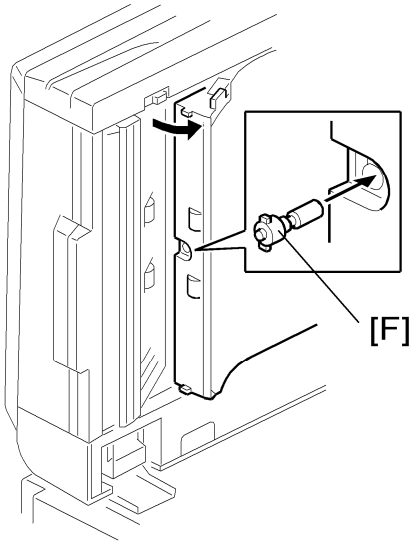


8. Install the stamp cartridge [F] in the ARDF.

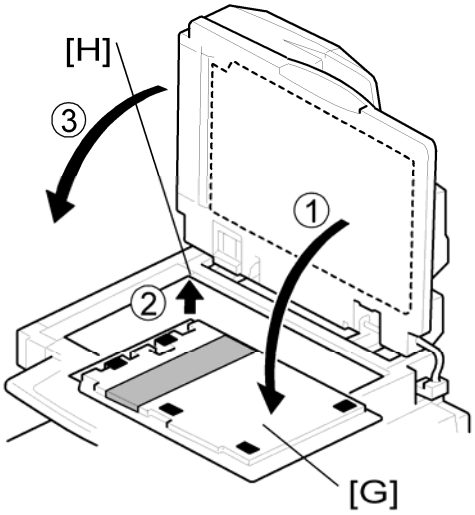


9. Peel off the platen sheet [G] and place it on the exposure glass.

10. Align the rear left corner of the platen sheet with the corner [H] on the exposure glass.
11. Close the ARDF.
12. Open the ARDF and check that the platen sheet is correctly attached.

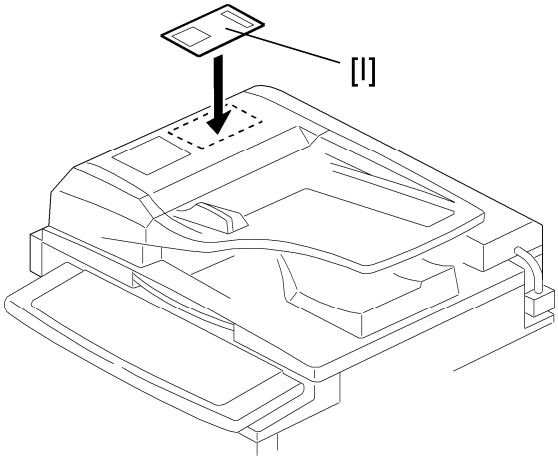


13. Attach the decal [I] to the top cover as shown. Choose the language you want.
14. Plug in and turn on the main power switch of the machine, and then check the ARDF operation.
15. Make a full size copy. Check that the registrations (side-to-side and leading edge) and image skew are correct. If they are not, adjust the registrations and image skew referring to "Copy Adjustments" in the "Replacements and Adjustments” section.

# 2.10 DOCUMENT FEEDER HANDLE TYPE 5

## 2.10.1 COMPONENT CHECK

Check the quantity and condition of the accessories against the following list.

| No. | Description | Q'ty |
|---|---|---|
| 1 | Handle Unit | 1 |
| 2 | Holder | 1 |
| 3 | Stud Bracket | 1 |
| 4 | Securing Bracket | 1 |
| 5 | Handle Bracket | 1 |
| 6 | Hinge Stopper - Right | 1 |
| 7 | Hinge Stopper - Left | 1 |
| 8 | Spacer | 1 |
| 9 | Bushing: M6 | 1 |
| 10 | Bushing: 6MM | 1 |
| 11 | Tapping Screw: M3 x 12 | 2 |
| 12 | Tapping Screw (Self Binding): M3 x 12 | 2 |
| 13 | Screw: M3 x 8 | 3 |
| 14 | Tapping Screw: M4 x 8 | 4 |
| 15 | Operation Decal | 1 |
| 16 | Stud Decal | 1 |

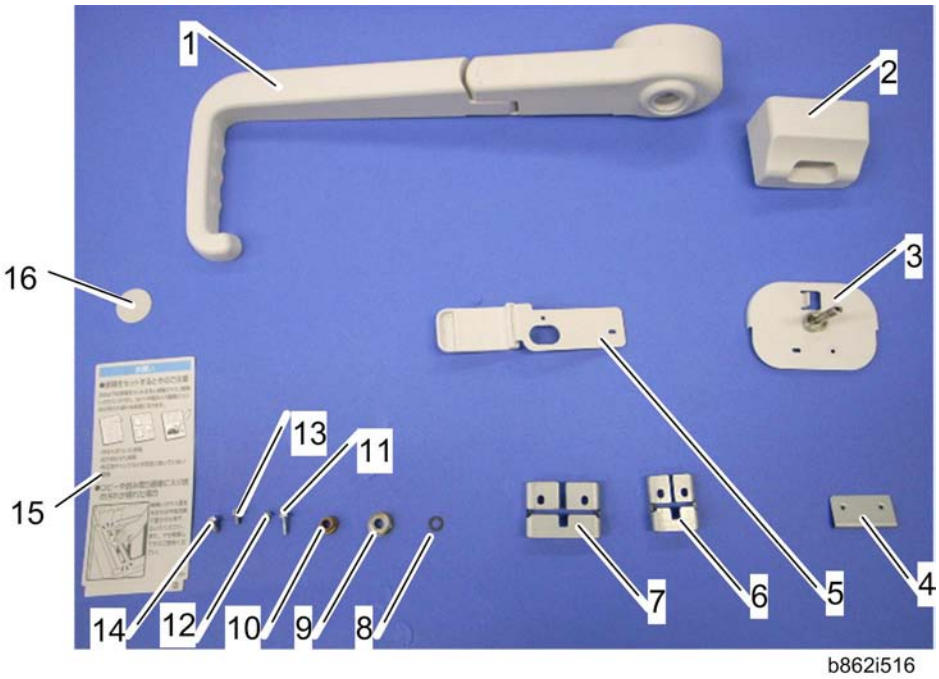


## 2.10.2 INSTALLATION PROCEDURE

**CAUTION**

- Turn off the main switch of the copier and unplug the power cord before you start the installation procedure.

### *Preparing before Installing the DF Handle*

1. Open the ADF unit.

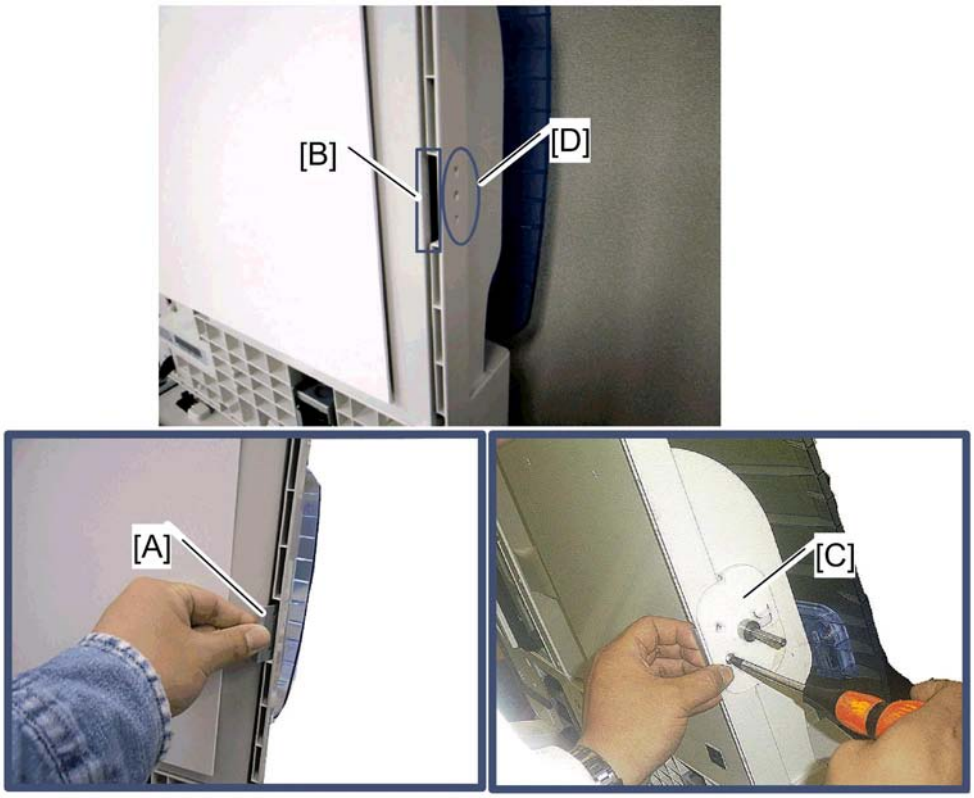


b862i501

2. Hold the securing bracket [A] at the location [B], inside the ADF cover.
3. Secure the stud bracket [C] to the outside of the ADF cover at location [D] with two screws (🔩 x 2: M3x8).

Note

- The two screws must go through the ADF cover and the securing bracket [A].

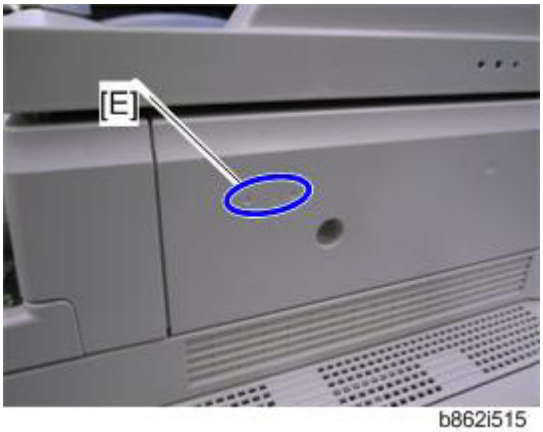


b862i515

4. Make two screw holes [E] in the scanner right cover with an M3x12 tapping screw from the accessories.

### *Installing the DF Handle*

1. Attach the holder [A] to the scanner right cover (Tapping Screw - M3x12: x 2).
   - At first, secure the screw at the rear side (away from the operation panel) temporarily and then at the front side temporarily. After that, secure them fully.

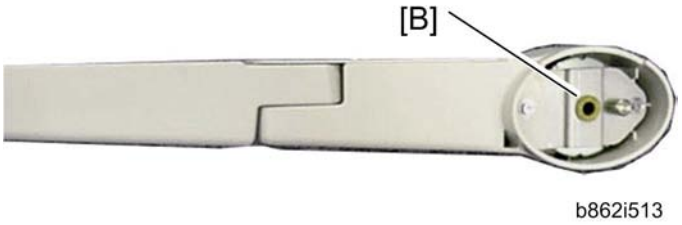


2. Install the bushing: 6MM [B] in the inside of the handle unit.
3. Attach the handle unit to the stud bracket on the left side of the ADF.

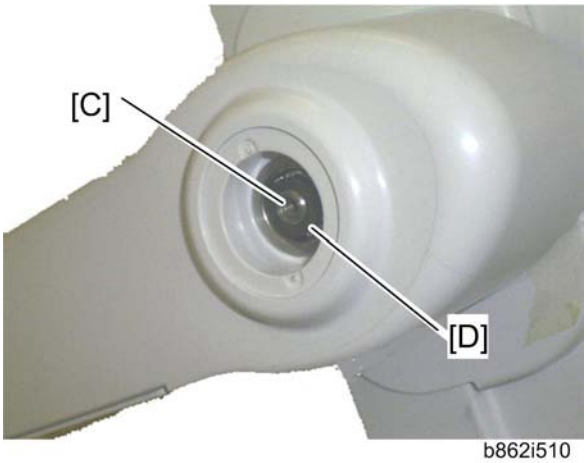


4. In the outside of the handle unit, install the bushing - M6 [C] first, and then the spacer [D].

b862i514

5. Secure the handle unit with a screw (🔩 x 1: M3x8).

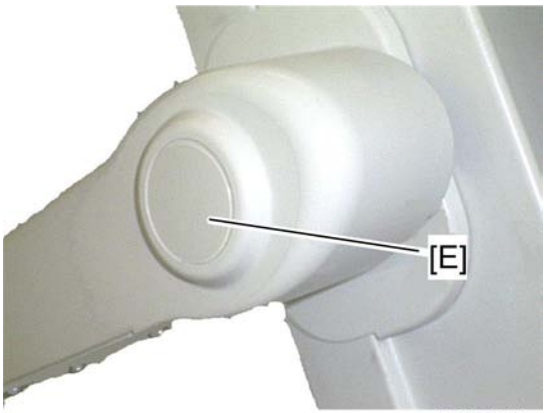


b862i511

6. Clean the handle unit with alcohol. Then attach the stud decal [E] at the location that was cleaned.

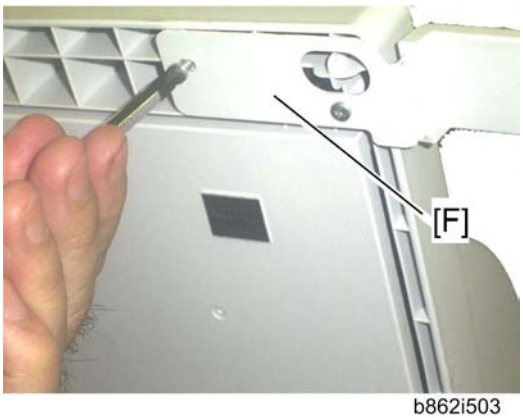


b862i503

7. Attach the handle bracket [F] at the front right side on the bottom of the ADF unit (Tapping Screw [Self Binding] x 2: M3x12).
8. Close the ADF unit.

b862i504

9. Attach the hinge stoppers (left [G] and right [H]) to the left and right hinges (Tapping screw x 2: M4x8 each).

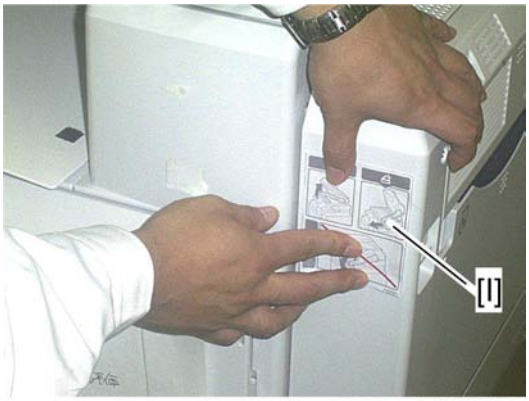

b862i505

10. Clean the front side of the duplex unit with alcohol. Then attach the operation decal [I] at the location that was cleaned.

b862i506

11. Check the operation of the handle unit [J].

# 2.11 1-BIN TRAY UNIT (D414)

## 2.11.1 COMPONENT CHECK

Check the quantity and condition of the components against the following list.

| No. | Description | Q'ty |
|---|---|---|
| 1 | 1-Bin Tray Unit | 1 |
| 2 | End-Fence | 1 |
| 3 | Tray Support Bar | 1 |
| 4 | Screws (M3 X 16) | 2 |
| 5 | Tray | 1 |

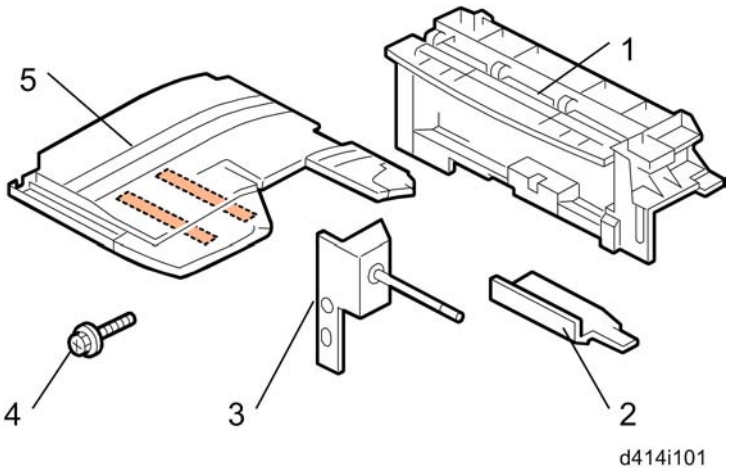


## 2.11.2 INSTALLATION PROCEDURE

**CAUTION**

- **Unplug the copier power cord before starting the following procedure.**

If the bridge unit (D386) has already been installed in the machine, remove it before installing 1-bin tray unit (D414). This will make it easier for you to do the following procedure.

1. Remove all tapes.
2. Open the right door of the machine.

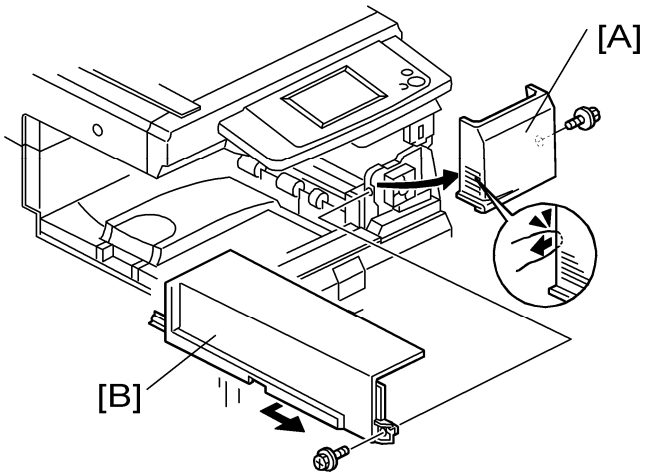


3. Remove the front right cover [A] (☞ x 1).
4. Remove the inner cover [B] (☞ x 1).

Note

- Keep this screw for step 5.

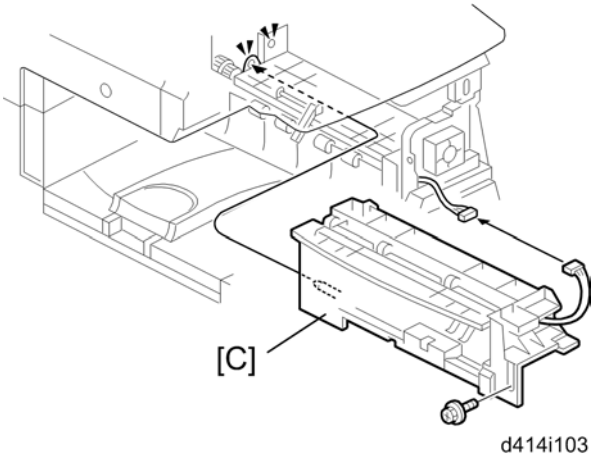


5. Install the 1-bin tray unit [C] (x 1, ☞ x 1, x 1 [This screw was removed in step 4]).

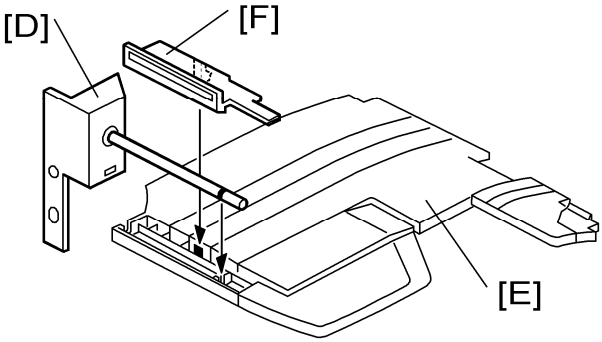


6. Attach the tray support bar [D] to the tray [E] as shown, and then attach the end-fence [F].

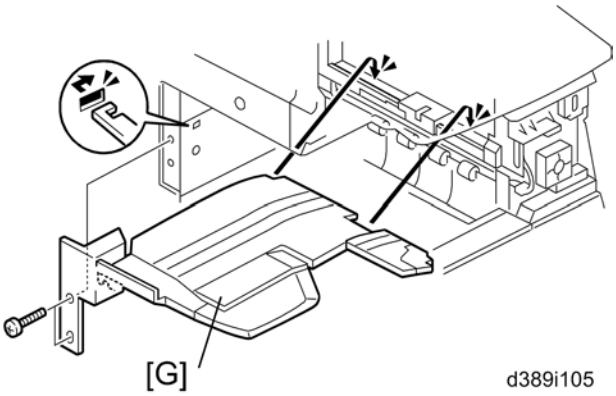


7. Install the tray [G] (with the tray support bar) in the machine (M3 x 16: x 2).
8. Reinstall the front right cover in the machine, and then close the right door of the machine.
9. Turn on the main power switch of the machine.
10. Check the 1-bin tray unit operation.

# 2.12 SHIFT TRAY UNIT (D388)

## 2.12.1 COMPONENT CHECK

Check the quantity and condition of the components against the following list.

| No. | Description | Q'ty |
|---|---|---|
| 1 | Shift Tray Unit | 1 |
| 2 | Paper Guide - Small | 2 |
| 3 | Connector Cover | 1 |

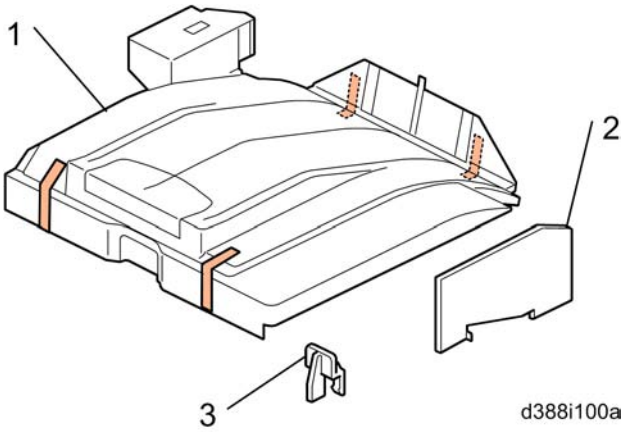


## 2.12.2 INSTALLATION PROCEDURE

**CAUTION**

- Unplug the copier power cord before starting the following procedure.

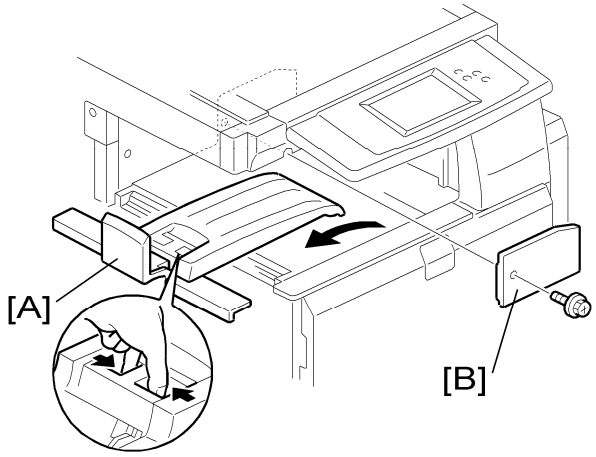

1. Remove all tapes.
2. Remove the standard tray [A].
3. Remove the inner cover [B] (🖉 x 1).

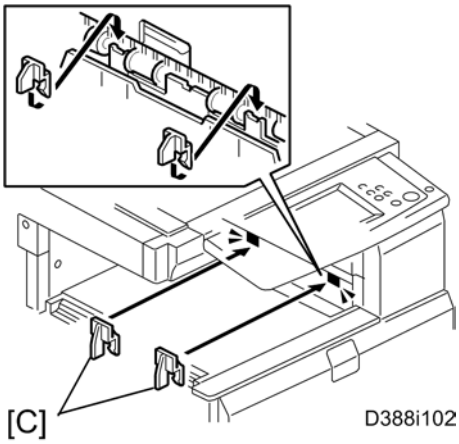


4. Install the small paper guides [C].

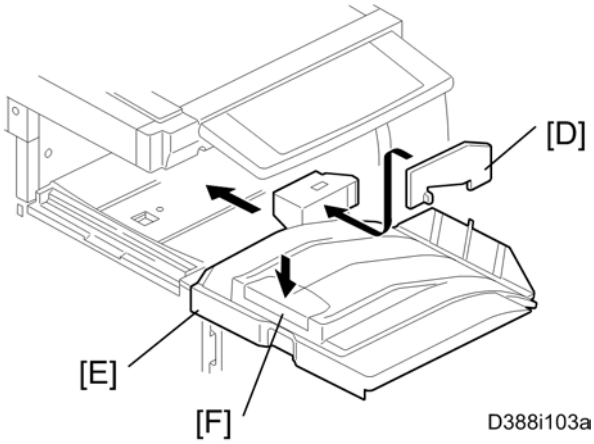


5. Attach the connector cover [D] to the shift tray unit [E].
6. Install the shift tray unit [E] to the machine.
7. Push down the left edge [F] of the shift tray.
8. Turn on the main power switch of the machine.
9. Check the shift tray unit operation.

# 2.13 BRIDGE UNIT (D386)

## 2.13.1 COMPONENT CHECK

Check the quantity and condition of the components against the following list.

| No. | Description | Q'ty |
|---|---|---|
| 1 | Bridge Unit | 1 |
| 2 | Frame Cover | 1 |
| 3 | Knob Screw | 1 |
| 4 | Long Knob Screw | 1 |
| 5 | Holder Bracket | 1 |
| 6 | Guide | 2 |

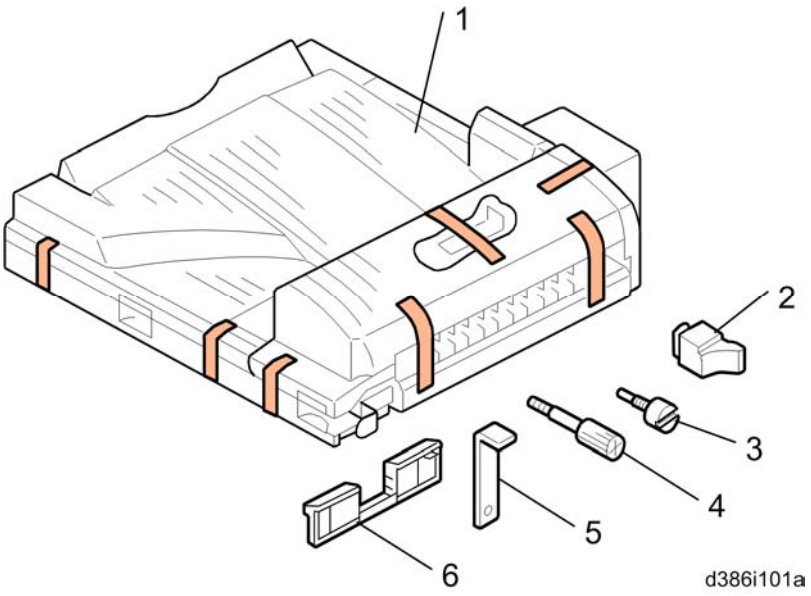

## 2.13.2 INSTALLATION PROCEDURE

**CAUTION**

- Unplug the copier power cord before starting the following procedure.

Note

- 1. If you will install the 1-bin tray (D414) in the machine, install the 1-bin tray before you install the bridge unit (D386). This will make it easier for you to do the following procedure.
- 2. If you will install a finisher (B408 or B793) in the machine, install the finisher after you install the bridge unit (D386).

1. Remove all tapes.

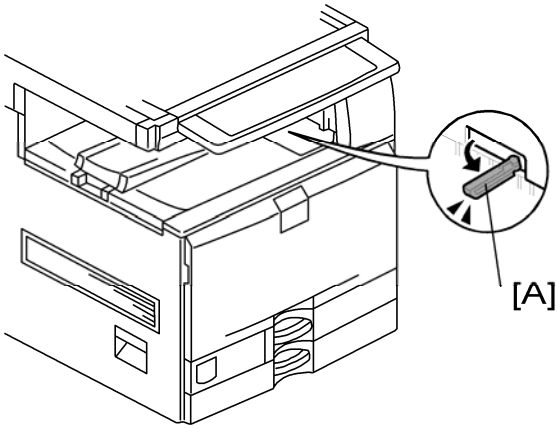


2. If the sensor feeler [A] is out, fold it into the machine.
3. Open the right door of the machine.

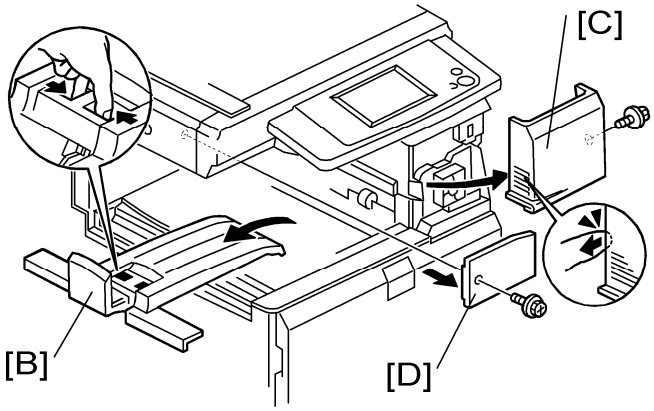


4. Remove the inner tray [B].
5. Remove the front right cover [C] (☞ x 1).
6. Remove the connector cover [D] (☞ x 1).

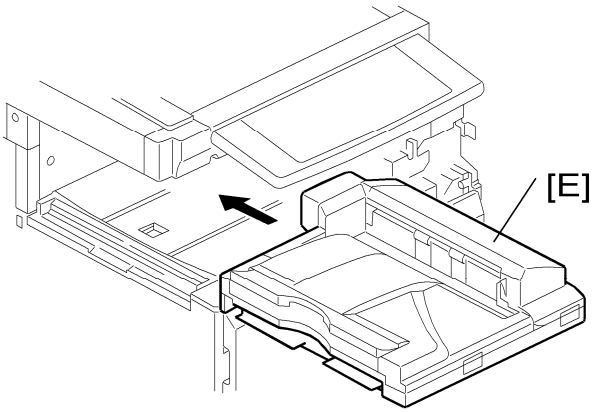


7. Install the bridge unit [E] in the machine.

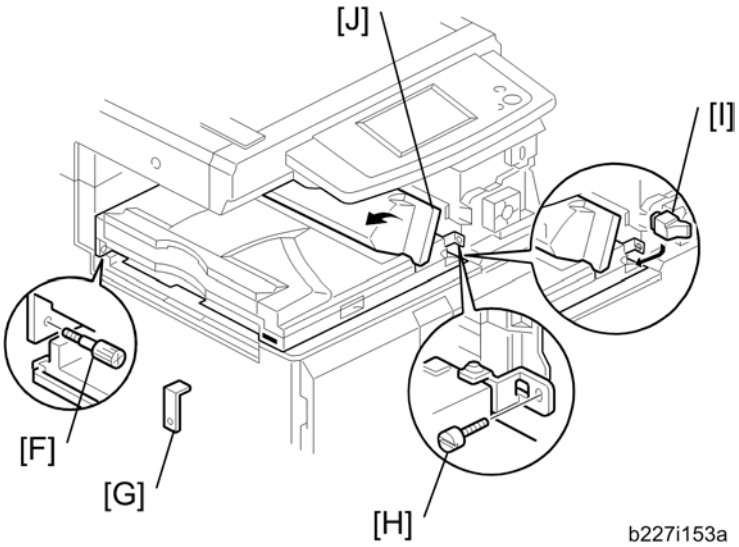


8. Secure the bridge unit with the knob screw [F] and screw [H].
9. Attach the frame cover [I].
10. Reinstall the front right cover in the machine. Then close the right door of the machine.

Note

- Open the bridge unit cover [J] when installing the front right cover. Otherwise, the bridge unit cover is an obstacle for attaching the front right cover.

11. Install the optional finisher (refer to the finisher installation procedure).

Note

- If you will not install the finisher at this time, install the holder bracket [G]. Otherwise, the customer will damage the bridge unit if they pull up the bridge unit tray. When you install the finisher, you will need this bracket during the installation procedure.

12. Turn on the main power switch of the machine.

13. Check the bridge unit operation.

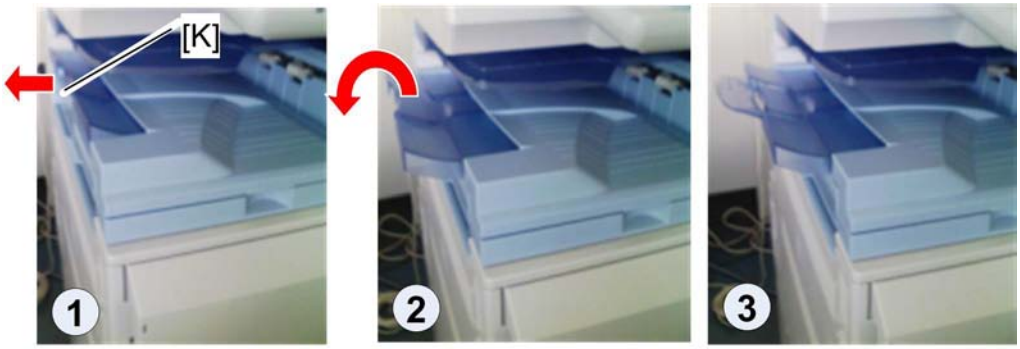


d386i509b

14. Pull the extension tray [K] only if the 1000-sheet finisher (B408) or the 500-sheet finisher (D372) is to be installed in the main machine.

# 2.14 500-SHEET FINISHER (D372)

## 2.14.1 ACCESSORY CHECK

Check the quantity and condition of the accessories against the following list.

| No | Description | Q'ty |
|---|---|---|
| 1 | Unit Holder | 1 |
| 2 | Shift Tray | 1 |
| 3 | Holder Bracket | 1 |
| 4 | Screw: M3 x 8 | 4 |
| 5 | Screw: M3 x 6 | 1 |
| 6 | Screw: M4 x 14 | 4 |
| 7 | Screw: M4 x 20 | 4 |
| 8 | Support Bracket | 2 |
| 9 | Support Bracket Cover | 2 |

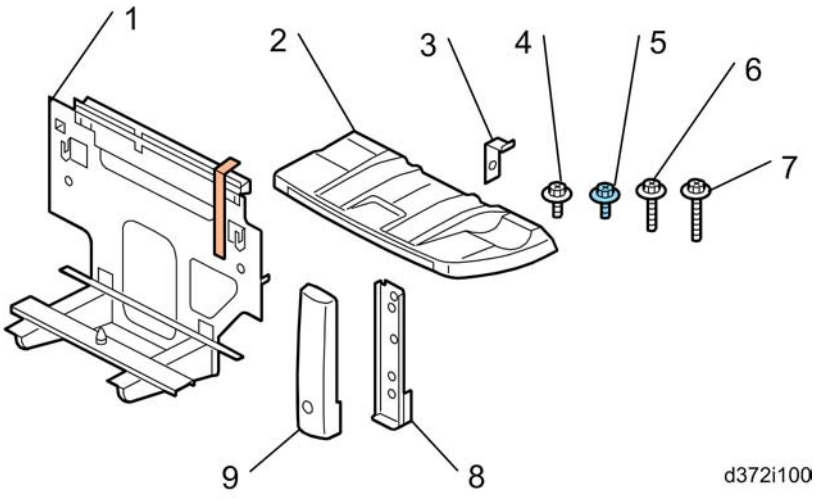

## 2.14.2 INSTALLATION PROCEDURE

**CAUTION**

- Unplug the main machine power cord before starting the following procedure.

Note

- Before you install the 500-sheet finisher, the optional bridge unit (D386) must be installed.

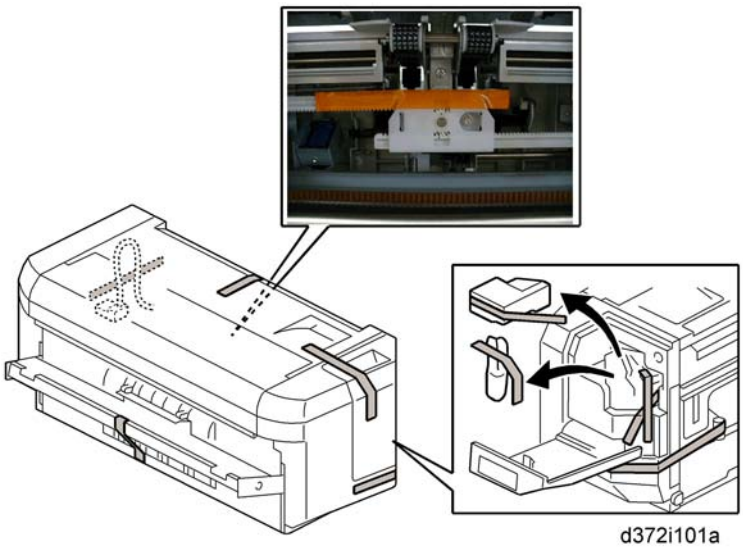


1. Unpack the finisher and remove the tapes.

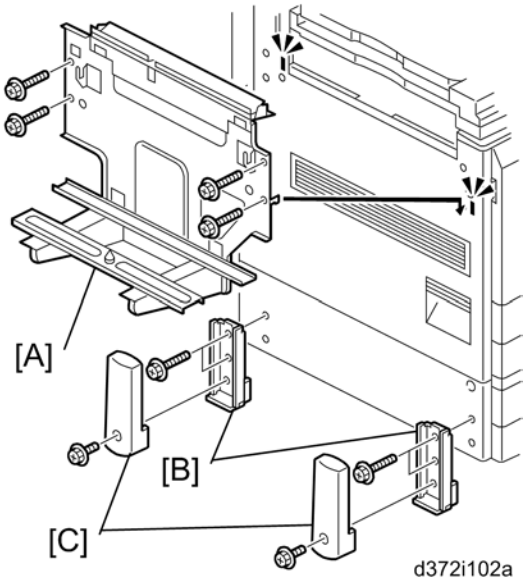


2. Install the unit holder [A] (🔩 x 3 - M4 x 14).
3. Install the support brackets [B] (🔩 x 2 each: M4 x 20)
4. Install the support bracket covers [C] (🔩 x 1 each: M3 x 8)

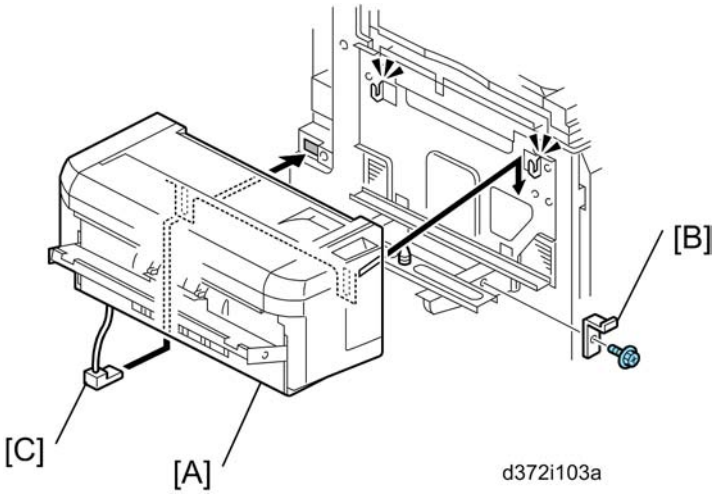


5. Install the 500-sheet finisher [A].
6. Install the holder bracket [B] (🖉 x 1; M3 x 6).
7. Connect the finisher cable [C].

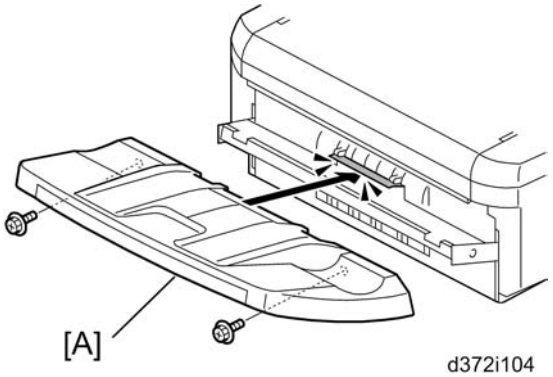


8. Install the shift tray [A] (🖉 x 2 - M3 x 8).
9. Turn on the main power switch and check the finisher operation.

# 2.15 1000-SHEET FINISHER (B408)

## 2.15.1 ACCESSORY CHECK

Check the quantity and condition of the accessories against the following list.

| No. | Description | Q'ty | D023/D025 |
|---|---|---|---|
| 1 | Front Joint Bracket | 1 | O |
| 2 | Rear Joint Bracket | 1 | --- |
| 3 | Rear Joint Bracket | 1 | O |
| 4 | Grounding Plate | 1 | O |
| 5 | Copy Tray | 1 | O |
| 6 | Staple Position Decal | 1 | O |
| 7 | Screw - M4 x 14 | 4 | O |
| 8 | Knob Screw - M4 x 10 | 1 | O |
| 9 | Screw - M3 x 8 | 1 | O |
| 10 | Knob Screw - M3 x 8 | 1 | O |

O = Necessary, --- = Not necessary

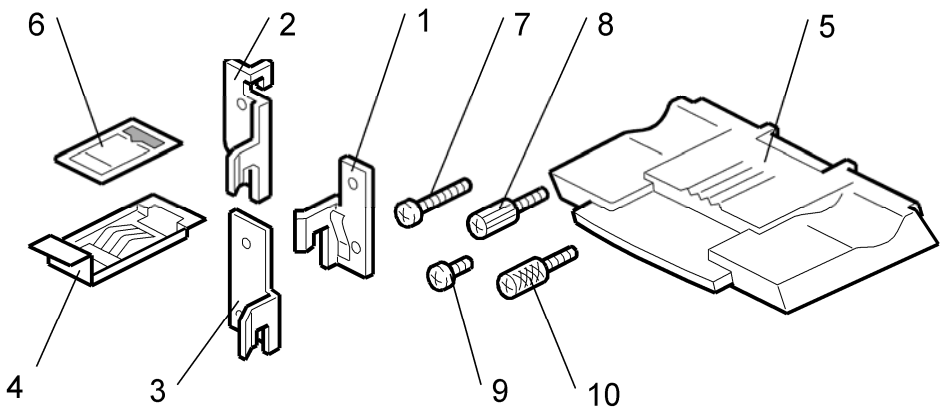

## 2.15.2 INSTALLATION PROCEDURE

**CAUTION**

- Unplug the main machine power cord before starting the following procedure.

If this finisher will be installed on the D023 or D025 copier, the following options must be installed before installing this finisher.

- Bridge Unit (D386)
- Paper Feed Unit (D351) or LCT (D352)

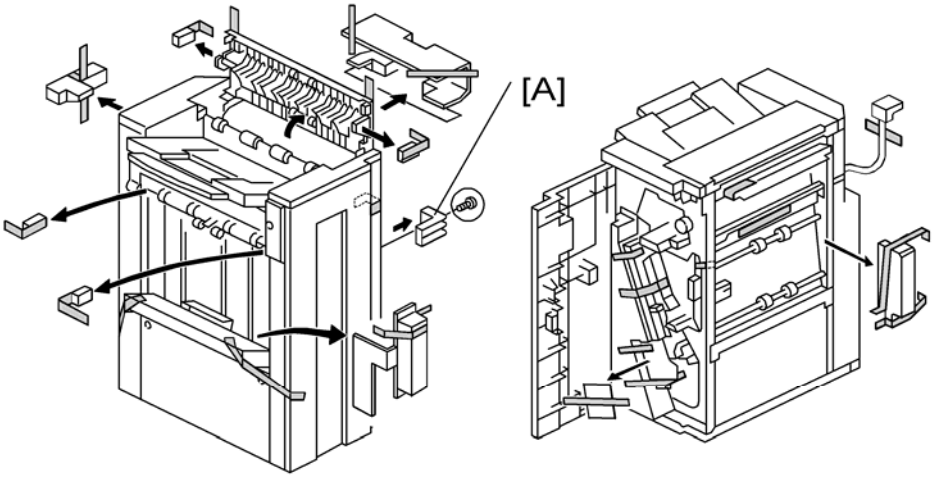


1. Unpack the finisher, and then remove the stopper [A] and tapes (☞ x 1).

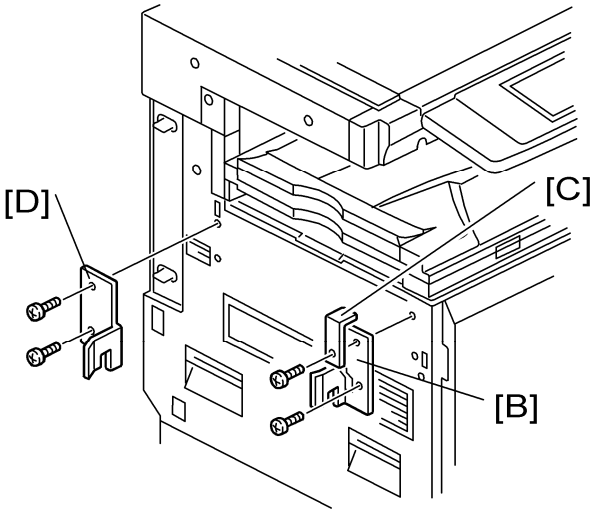


2. Install the front joint bracket [B], holder bracket [C] (☞ x 2 - M4 x 14), and rear joint bracket [D] (☞ x 2 - M4 x 14).

Note

- The holder bracket [C] must be placed outside the front joint bracket [B]. The holder bracket is provided with the bridge unit (D386).

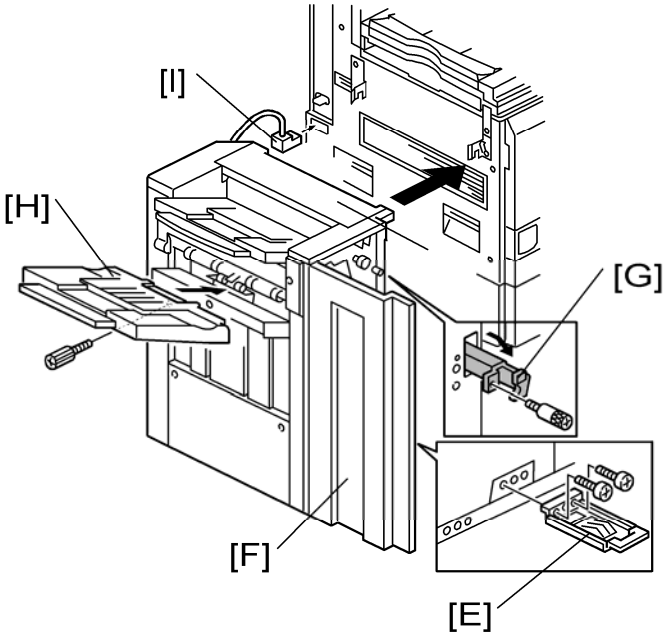


3. Install the grounding plate [E] on the finisher (🔩 x 2 - M3 x 8).

Note

- Use the screw removed in step 1 and the screw from the accessory box.

4. Open the front door [F] of the finisher, and then pull the locking lever [G] (1 knob screw - M3 x 8).
5. Align the finisher on the joint brackets, and lock it in place by pushing the locking lever.
6. Secure the locking lever (1 knob screw - M3 x 8).
7. Close the front door.
8. Install the copy tray [H] (1 knob screw - M4 x 10).
9. Connect the finisher cable [I] to the main machine below the right rear handle.

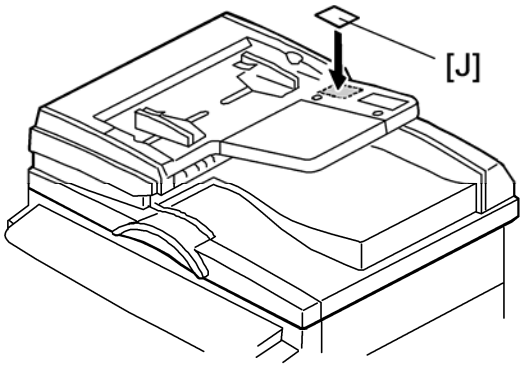


10. Attach the staple position decal [J] to the ARDF as shown.
11. Turn on the main power switch and check the finisher operation.

# 2.16 1000-SHEET BOOKLET FINISHER (B793)

## 2.16.1 ACCESSORY CHECK

Check the quantity and condition of the accessories against the following list.

| No. | Description | Q'ty |
|---|---|---|
| 1 | Rear Joint Bracket | 1 |
| 2 | Front Joint Bracket | 1 |
| 3 | Grounding Plate | 1 |
| 4 | Upper Output Tray | 1 |
| 5 | Cushion | 2 |
| 6 | Lower Output Tray | 1 |
| 7 | Short Knob Screw | 1 |
| 8 | Long Knob Screw | 1 |
| 9 | Screw (M3 x 8) | 2 |
| 10 | Screw (M4 x 14) | 4 |

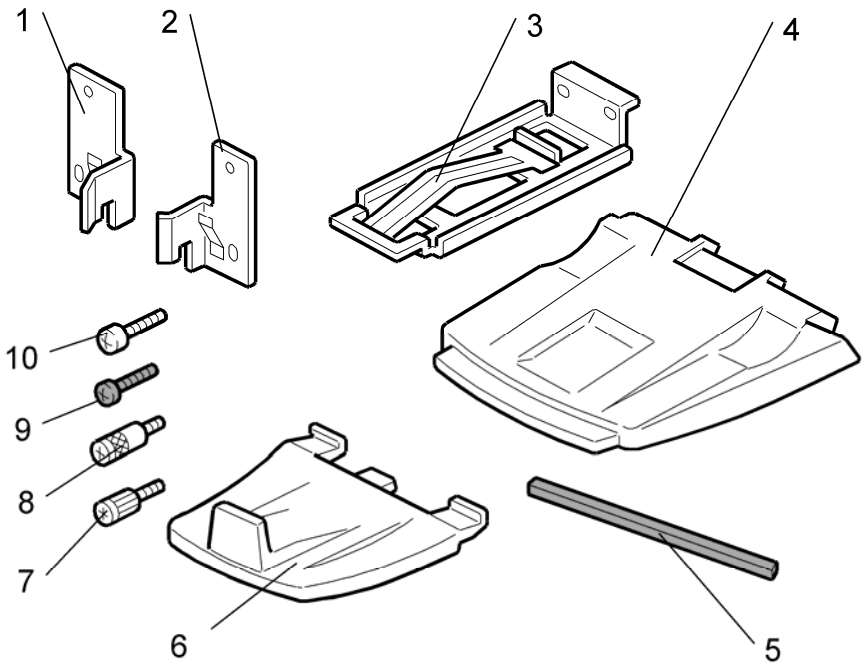


## 2.16.2 INSTALLATION PROCEDURE

**CAUTION**

- Unplug the main machine power cord before starting the following procedure.

The bridge unit (D386) and optional paper feed unit (D387 or D351) must be installed before installing this finisher (B793).

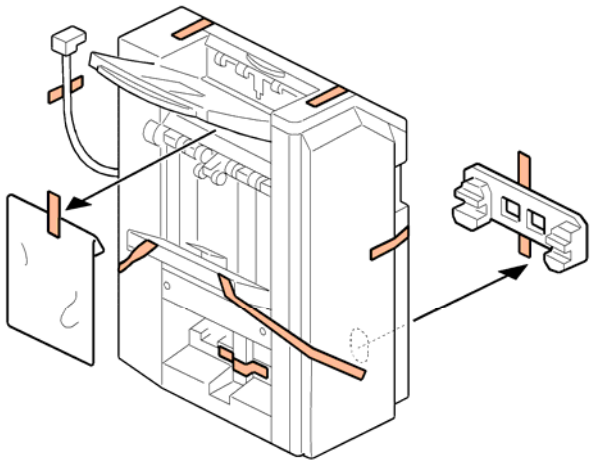

1. Unpack the finisher and remove all tapes and packing materials from the finisher.

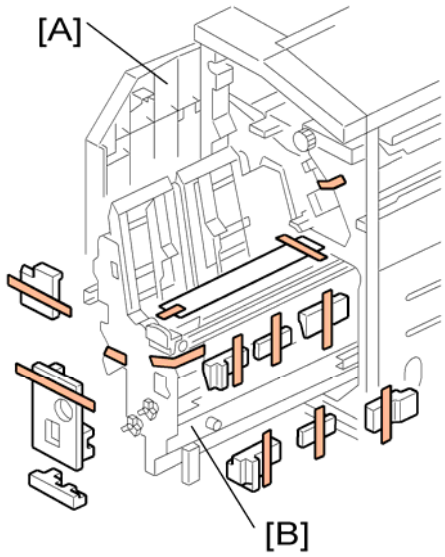


2. Open the front door [A] of the 1000-sheet booklet finisher, and then pull out the jogger unit [B].
3. Remove all tapes and packing materials from the inside of the finisher.

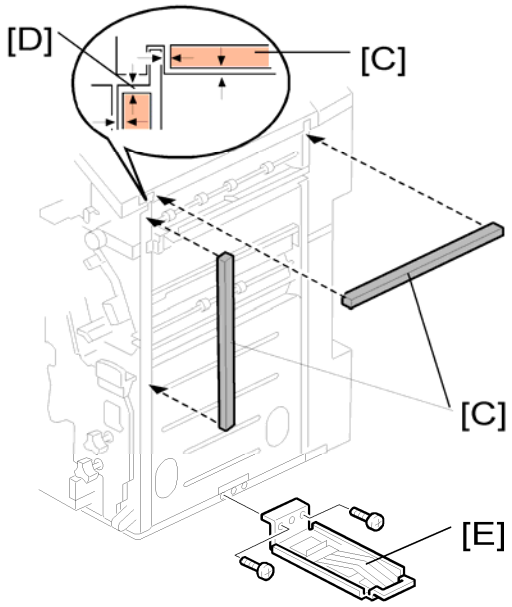


4. Attach the cushions [C] to the finisher.

Note

- Make sure that the cushions are placed within 0 to 1 mm [D] from the edge of the cover or frame.

5. Install the ground plate [E] on the finisher (🔩 x 2; M3 x 8).

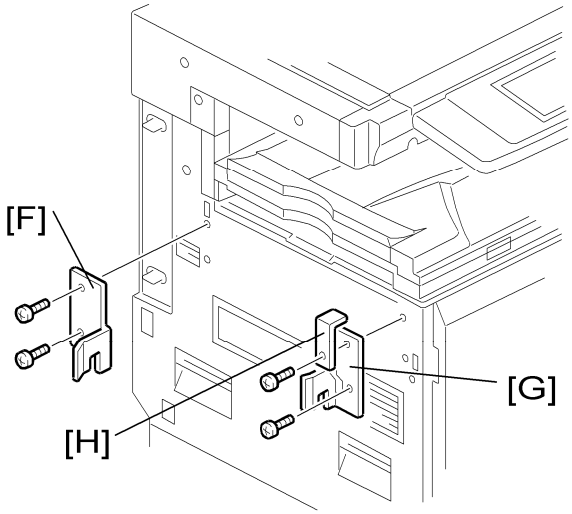


6. Attach the rear joint bracket [F] (🖉 x 2, M4 x 14).
7. Attach the front joint bracket [G] and the holder bracket [H] (🖉 x 2; M4 x 14).

Note

- The holder bracket [H] must be placed outside the front joint bracket [G]. The holder bracket is provided with the bridge unit (D386).

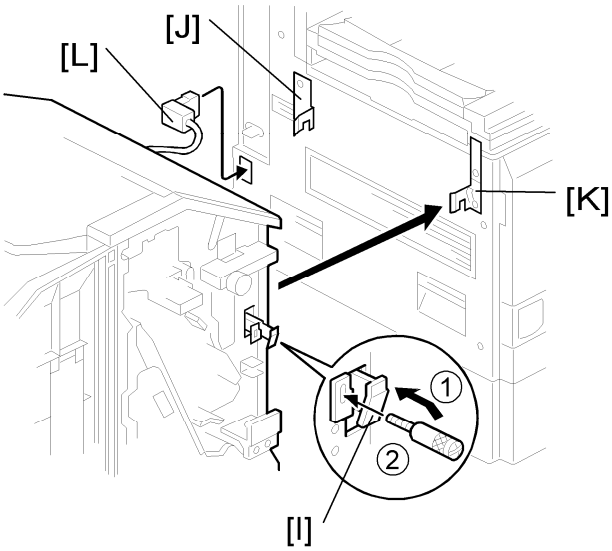


8. Pull the lock lever [I] (Long knob screw x 1).
9. Slowly push the finisher to the left side of the machine, keeping its front door open until the brackets [J] [K] go into their slots.
10. Push the lock lever [I], and then secure it (Long knob screw x 1).
11. Close the front door of the finisher.
12. Connect the finisher connector [L] to the machine.

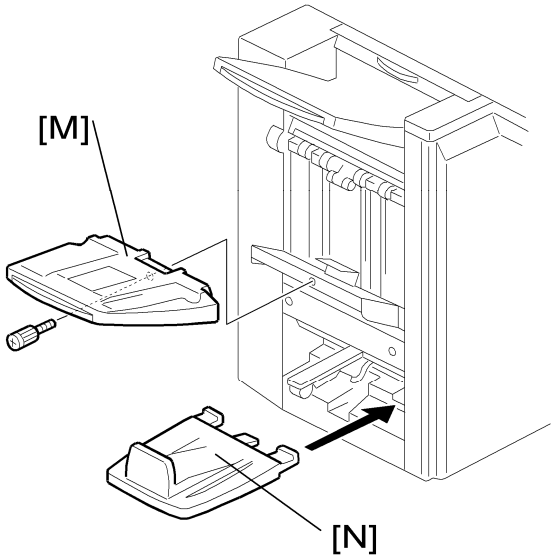


13. Install the upper output tray [M] (Short knob screw x 1).
14. Install the lower output tray [N].
15. Turn on the main power switch of the machine.
16. Check the 1000-sheet booklet finisher operation.

# 2.17 PUNCH UNIT

## 2.17.1 COMPONENT CHECK

Check the quantity and condition of the components against the following list.

| No. | Description | Q'ty |
|---|---|---|
| 1 | Punch Unit | 1 |
| 2 | Punch Drive Motor | 1 |
| 3 | Hopper Full Sensor Arm | 1 |
| 4 | Sub-scan Registration Sensor Unit | 1 |
| 5 | Punch Unit Stay | 1 |
| 6 | Sub-Scan Registration Sensor Guide | 1 |
| 7 | Hopper | 1 |
| 8 | Screw | 1 |
| 9 | Step Screw | 1 |
| 10 | Spring | 1 |

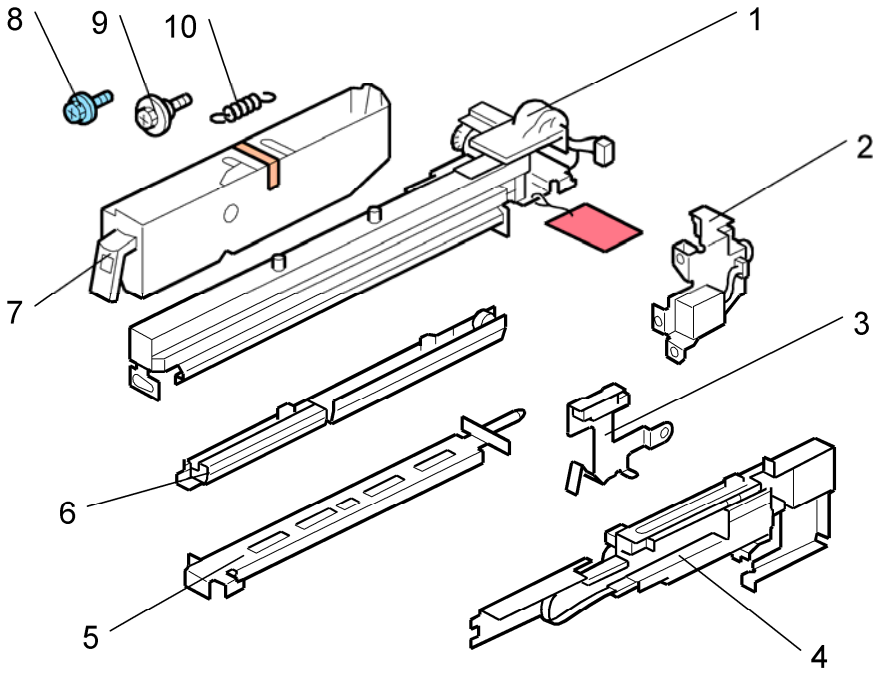
8
9
10
1
2
7
3
6
5
4

## 2.17.2 INSTALLATION

**CAUTION**

- Unplug the main machine power cord before starting the following procedure. If the 1000-sheet booklet finisher has been installed, disconnect it and pull it away from the machine.

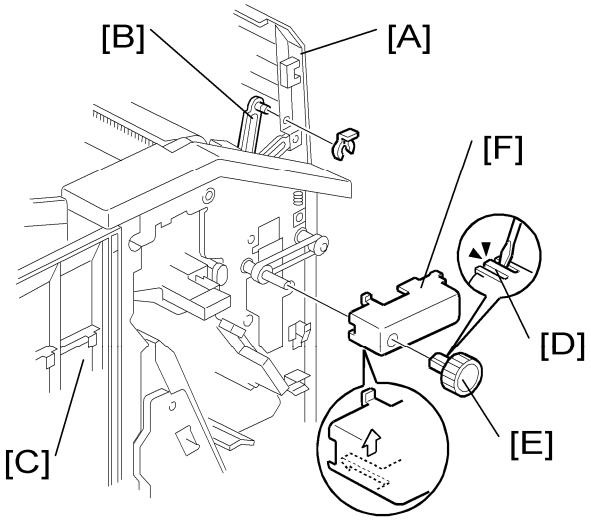


1. If the finisher is connected to the machine, disconnect it.
2. Open the top cover [A] and then release the guide arm [B] (x 1).
3. Open the front door [C].
4. Pull the hook [D] up then remove the knob [E].
5. Timing belt cover [F].

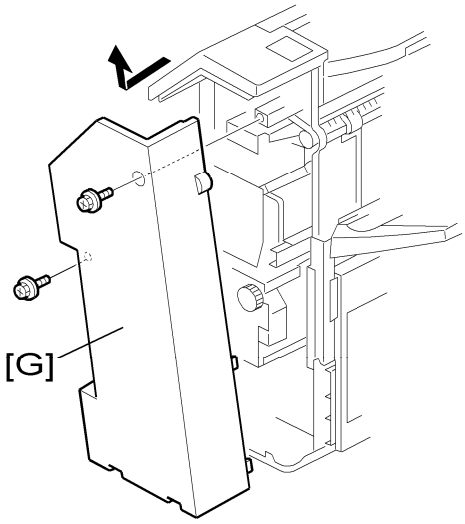


6. Rear cover of the 1000-sheet booklet finisher [G] (x 2).

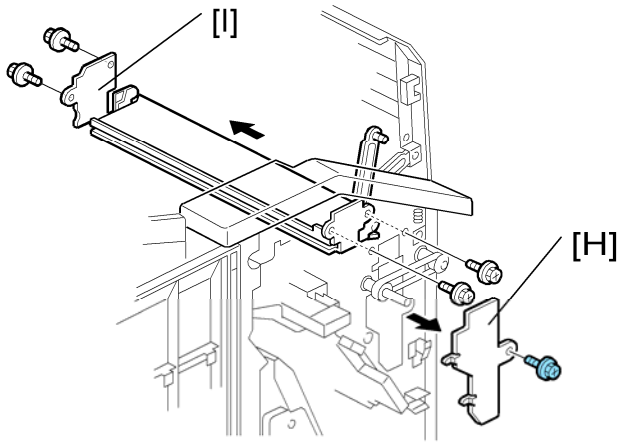


7. Cover bracket [H] (☞ x 1)
8. Remove the paper guide plate [I] from the rear side (☞ x 4).

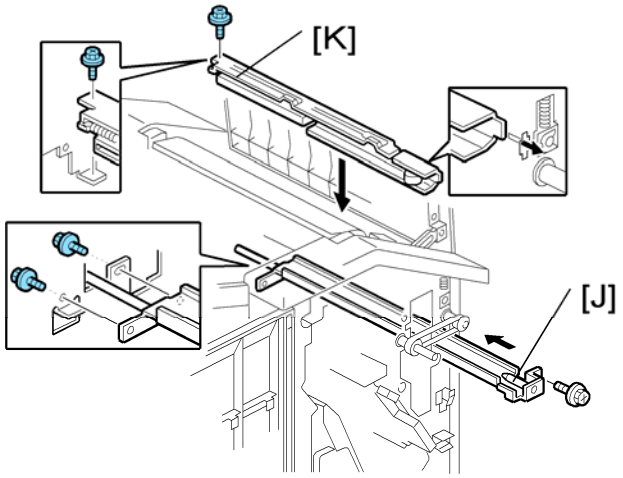


9. Install the punch unit stay [J] from the front side (☞ x 3).
10. Install the sub-scan registration sensor guide [K] from the top (☞ x 1).

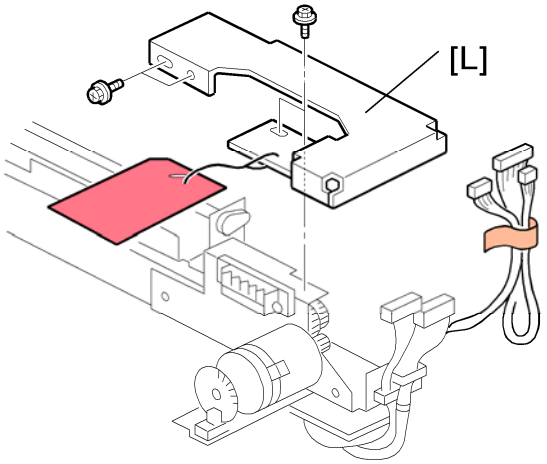

11. Remove the bracket [L] from the punch unit (☞ x 1).

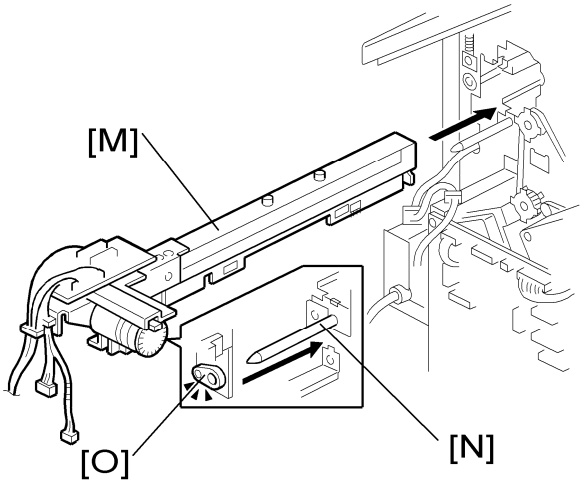


12. Install the punch unit [M] along the punch unit stay from the rear side.
13. Make sure to put the punch unit stay pin [N] through the hole [O].

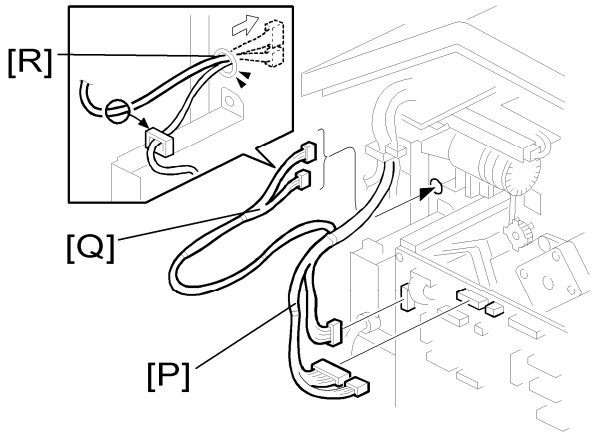


14. Connect the harnesses [P] to the main PCB.
15. Put the harnesses [Q] through the hole [R] in the rear frame (☞ x 1).

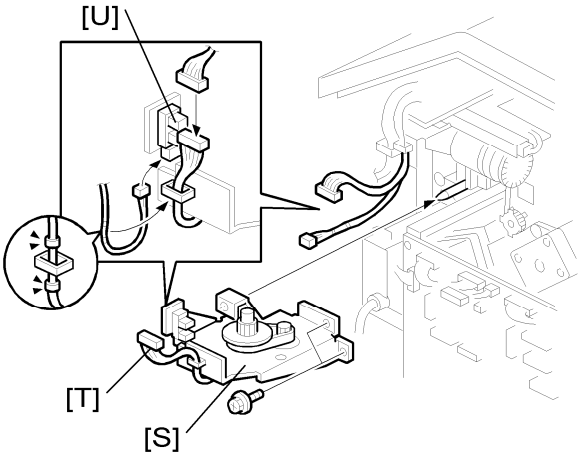


16. Install the punch drive motor [S] on the rear frame (🔩 x 2).
17. Connect the drive motor harness [T] to the harness from the punch unit (🔌 x 1).
18. Connect the home position sensor harness from the punch unit to the home position sensor [U].

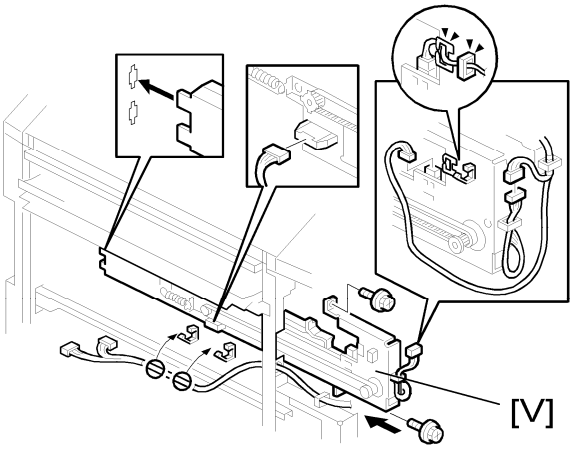


19. Install the sub-scan registration sensor unit [V] from the rear side (🔩 x 2).
20. Route and connect the harnesses as shown (🔌 x 2).

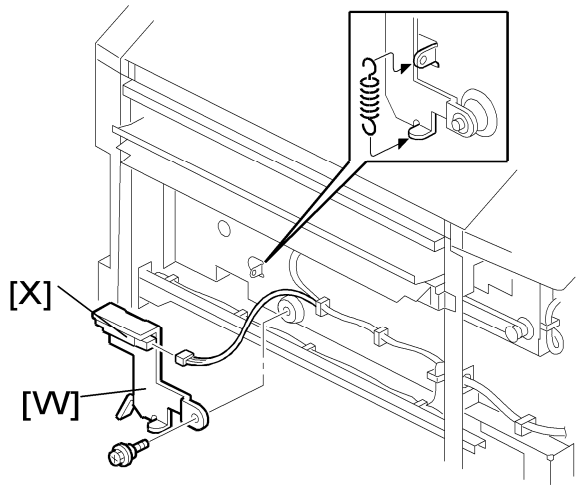


21. Install the hopper full sensor arm [W] (☞ x 1, spring x 1).
22. Connect the harness from the sub-scan registration sensor unit to the hopper full sensor [X].

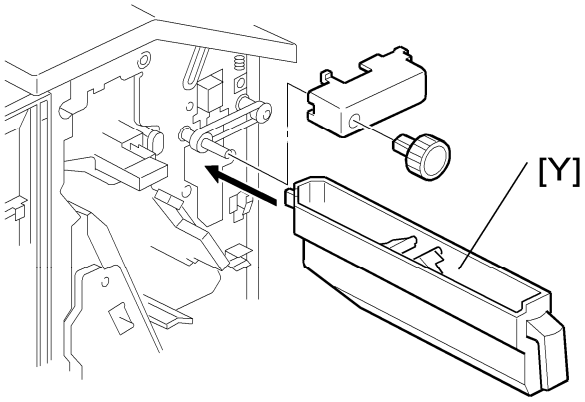


23. Install the hopper [Y] from the front side.
24. Reinstall the timing belt cover and knob.
25. Reinstall the rear cover (☞ x 2).
26. Close the front door and top cover.
27. Install the 1000-sheet booklet finisher on the copier.
28. Plug in and turn on the main power switch.
29. Check the 1000-sheet booklet finisher operation.

# 2.18 MECHANICAL COUNTER (NA ONLY)

## 2.18.1 INSTALLATION PROCEDURE

1. Rear cover (see "Rear Cover" in the "Replacement and Adjustment" section)
2. Right rear cover (see "Right Rear Cover" in the "Replacement and Adjustment" section)

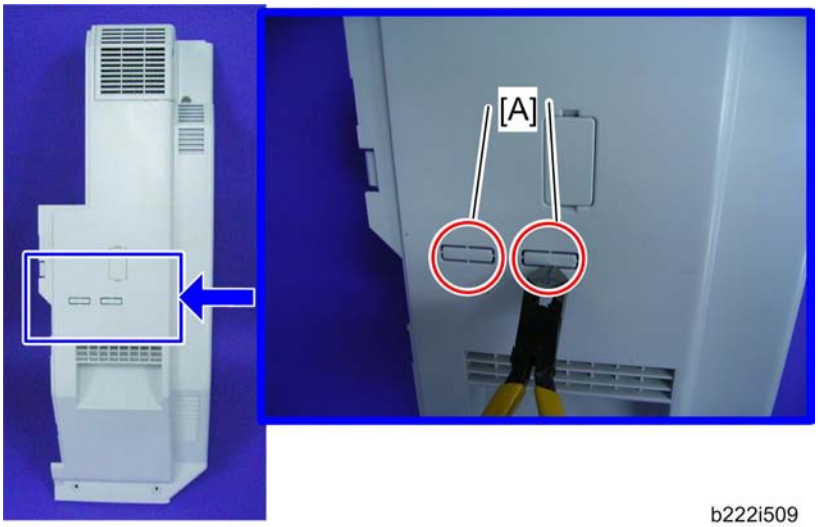


b222i509

3. Remove the cutouts [A] in the right rear cover with nippers.

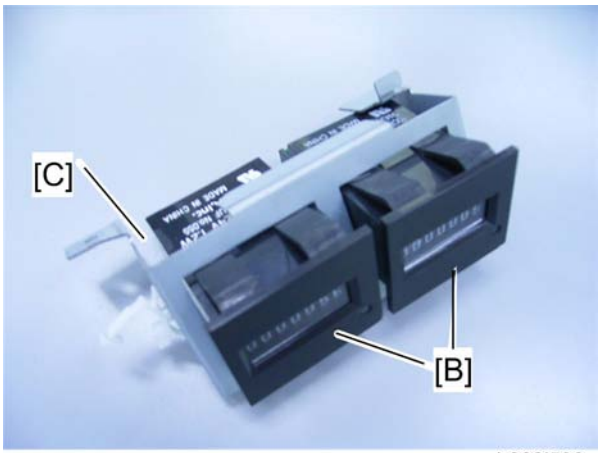


b222i508

4. Attach the mechanical counters [B] to the bracket [C] and connect the harness to each mechanical counter.

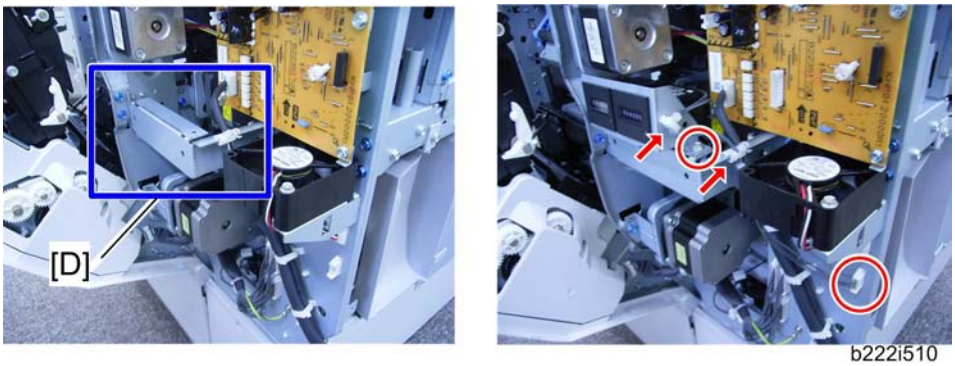


5. Attach the mechanical counter bracket to the frame [D] (x 1, x 2, x 1).
6. Reassemble the machine.
7. Plug in the machine and turn on the main power switch.
8. Enter the SP mode.
9. Set SP5987-001 to "1: ON".
10. Exit the SP mode, and then turn the machine off and on.

# 2.19 KEY COUNTER BRACKET

## 2.19.1 INSTALLATION PROCEDURE

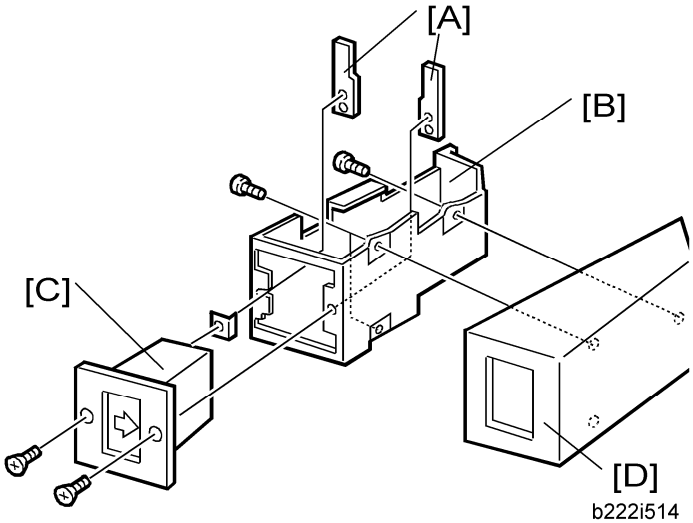


1. Hold the key counter plate nuts [A] on the inside of the key counter bracket [B] and insert the key counter holder [C].
2. Secure the key counter holder to the bracket (🔩 x 2).
3. Install the key counter cover [D] (🔩 x 2).
4. Rear cover (☛"Rear Cover" in the Replacement and Adjustment section)

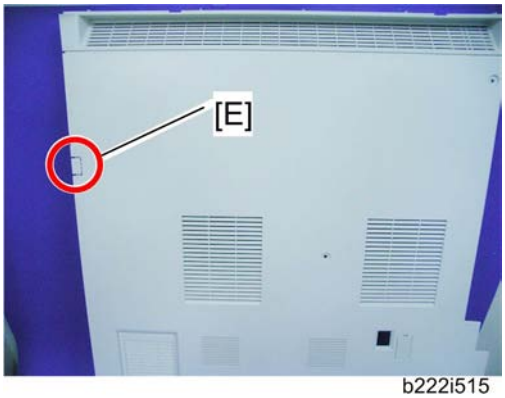


5. Cut off part [E] of the rear cover as shown above.

b222i516

6. Connect the harness to the connector [F] inside the machine.

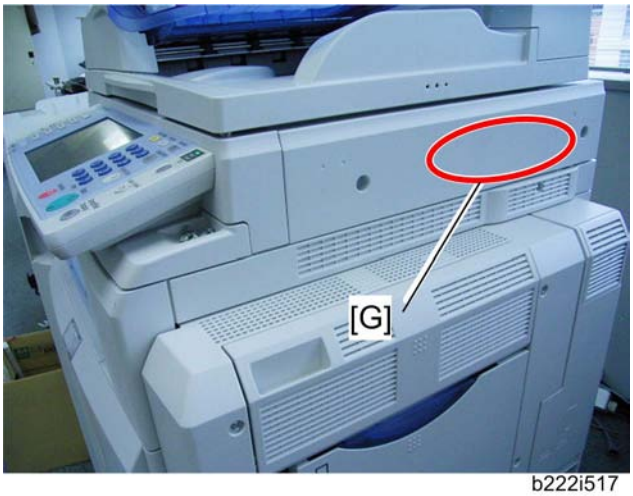

b222i517

7. Peel off double sided tape on the key counter bracket and attach the key counter to the scanner right cover [G].
8. Reassemble the machine.

# 2.20 KEY COUNTER INTERFACE UNIT

## 2.20.1 INSTALLATION PROCEDURE

1. Rear cover (see "Rear Cover" in the "Replacement and Adjustment" section)
2. IOB bracket (see "Controller Box" in the "Replacement and Adjustment" section)

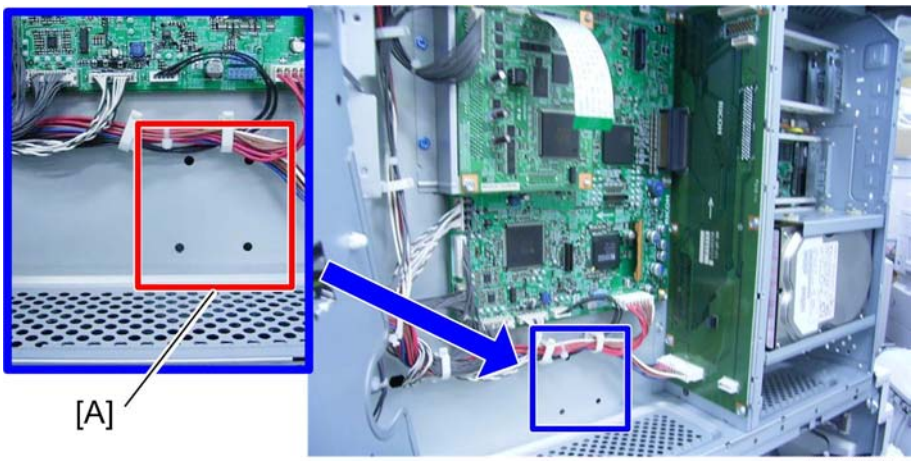


b222i511

3. Install the four stud stays in the location [A] in the controller box.
4. Install the key counter interface board on the four stud stays in the controller box.
5. Connect the harness to CN3 on the key counter interface board.

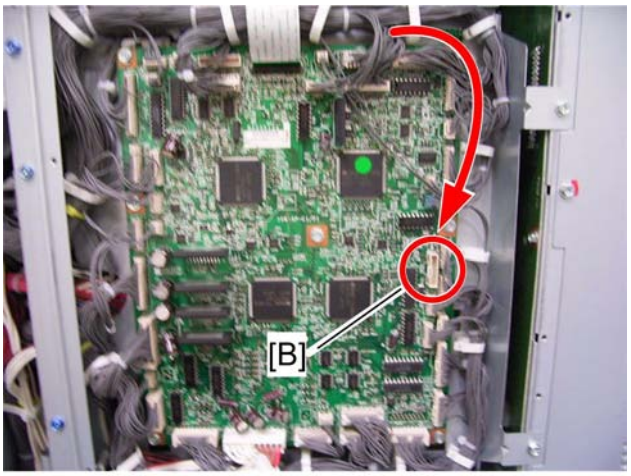


b222i676

6. Close the IOB bracket and connect the other terminal to CN215 [B] on the IOB.

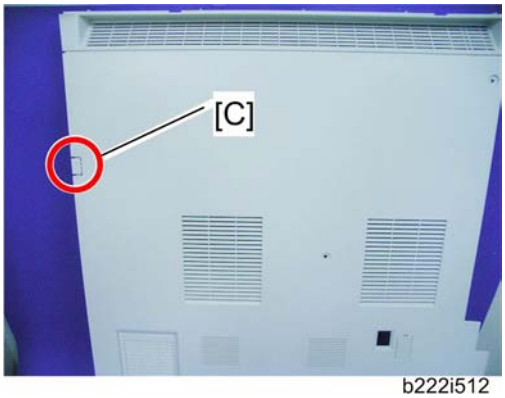


b222i512

7. Cut off the part [C] of the rear cover.

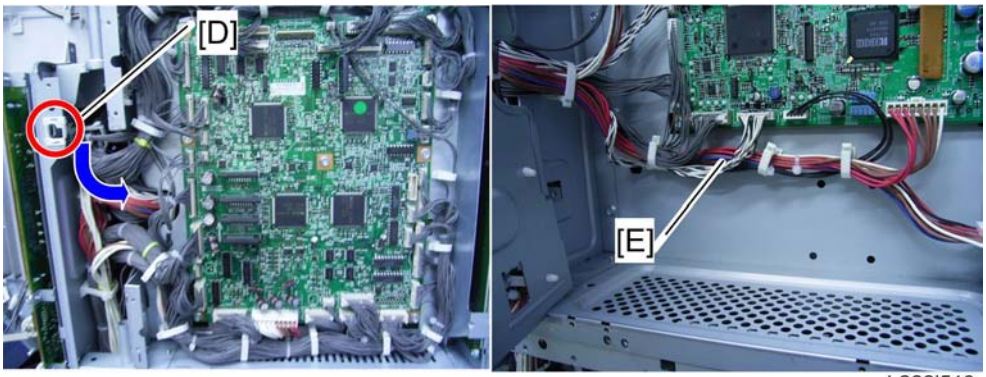


b222i513

8. Clamp the harness from the counter device with the clamp [D] and put it as shown by the blue arrow (🖷 x 1).
9. Route the harness from the counter device in the same way as the other harnesses [E] (🖷 x 3).
10. Connect the harness from the counter device to CN4 on the key counter interface board.
11. Reattach the IOB bracket (see "Controller Box" in the "Replacement and Adjustment" section)
12. Reassemble the machine.

# 2.21 COPY DATA SECURITY UNIT TYPE F (B829)

## 2.21.1 INSTALLATION

**CAUTION**

- Unplug the main machine power cord before you do the following procedure.

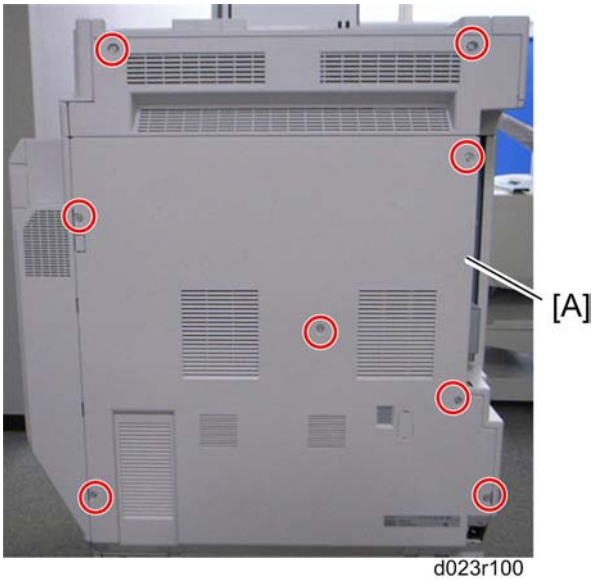


1. Remove the rear cover [A] of the machine (🔩 x 8).

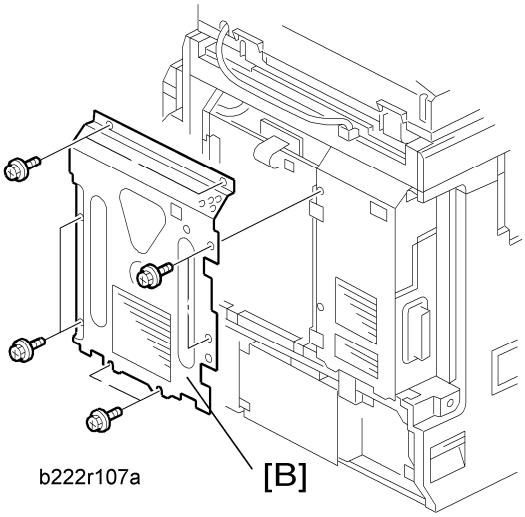


2. Remove the controller box right cover [B] (🔩 x 8).

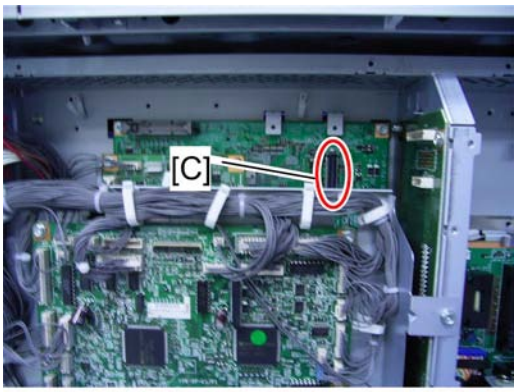


b222i507

3. Attach the ICIB-3 (copy data security board) to CN 508 [C] on the BICU (☞ x 2).
4. Reassemble the machine.

### *User Tool Setting*

1. Plug in and turn on the main power switch.
2. Go into the User Tools mode, and select System Settings > Administrator Tools > Copy Data Security Option > “On”.
3. Exit User Tools.
4. Check the operation.

Note

- The machine will issue an SC165 error if the machine is powered on with the ICIB-3 removed and the “Data Security for Copying “feature set to “ON”.
- When you remove this option from the machine, first set the setting to “OFF” with the user tool before removing this board. If you forget to do this, “Data Security for Copying“ feature cannot appear in the user tool setting. And then SC165 will appear every time the machine is switched on, and the machine cannot be used.

Make sure that the machine can recognize the option (see ‘Check All Connections’ at the end of this section).

# 2.22 USB2.0/SD SLOT TYPE A

## 2.22.1 ACCESSORY CHECK

Check the quantity and condition of the accessories against the following list.

| No. | Description | Q'ty |
|---|---|---|
| 1 | USB2.0/SD Slot | 1 |
| 2 | Ground Plate | 1 |
| 3 | USB Cable | 1 |
| 4 | Screw: M3 x 6 blue | 1 |
| 5 | Screw: M3 x 8 | 4 |
| 6 | Screw: M3 x 6 | 1 |
| 7 | Bracket | 1 |

## 2.22.2 INSTALLATION PROCEDURE

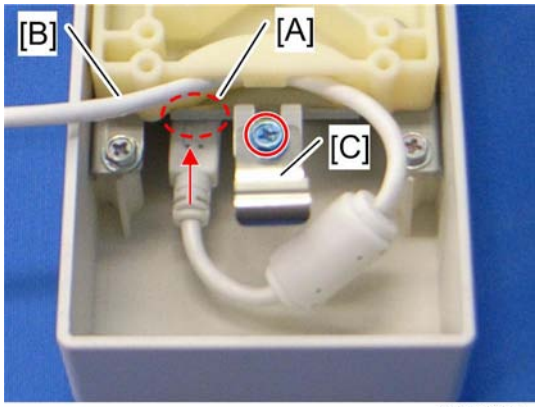


d027i111

1. Connect the USB cable [B] to the USB slot [A] in the USB2.0/SD Slot as shown above.
2. Attach the ground plate [C] to the bracket of the USB2.0/SD Slot (🖉 x 1: M3x6 blue).

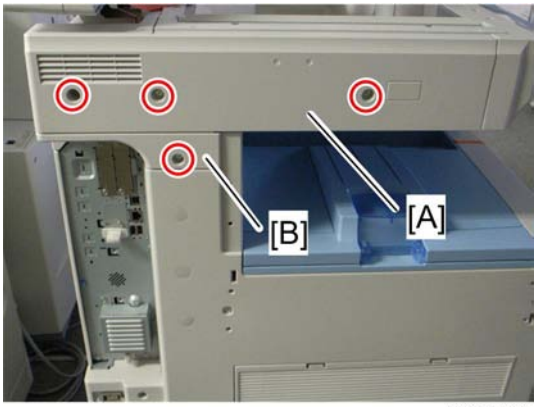


d023i110

3. Rear cover of the machine (🖉 x 8)
4. Remove the scanner left cover [A] (🖉 x 2).
5. Remove the left frame cover [B] (🖉 x 1).

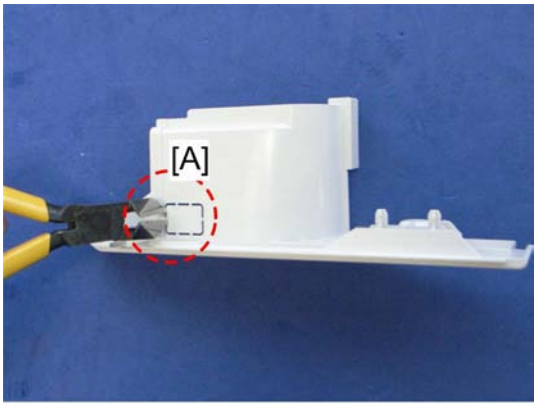


d027i112

6. Remove part [A] of the left frame cover with pliers or a similar tool.
7. Reinstall the left frame cover (🖉 x 1).

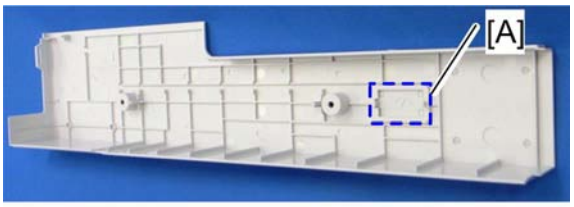


d023i113

8. Remove the part [A] on the scanner left cover.

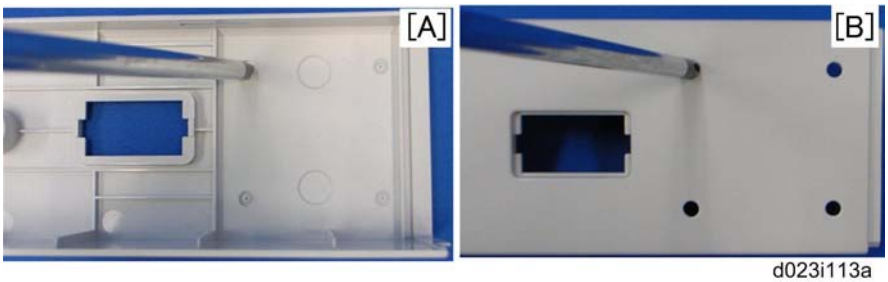


d023i113a

9. Make four holes in the scanner left cover with a screwdriver as shown [A].

Note

- Smooth the four holes in the scanner left cover as shown [B].

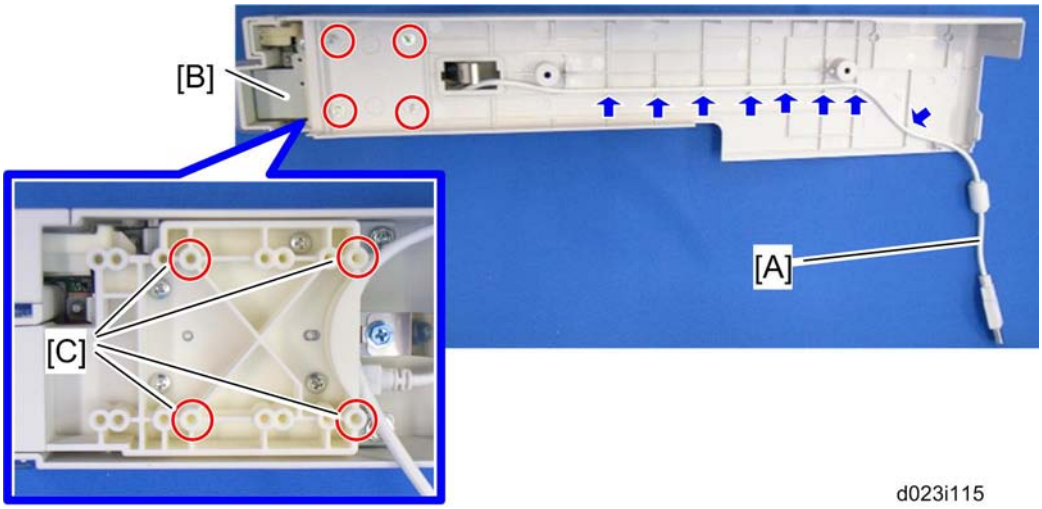


d023i115

10. Route the USB cable [A] through the gaps in the left scanner cover.
11. Secure the USB2.0/SD Slot [B] with the left scanner cover as shown above (🔩 x 4: M3x8).

Note

- Use the screw holes [C] as shown above.

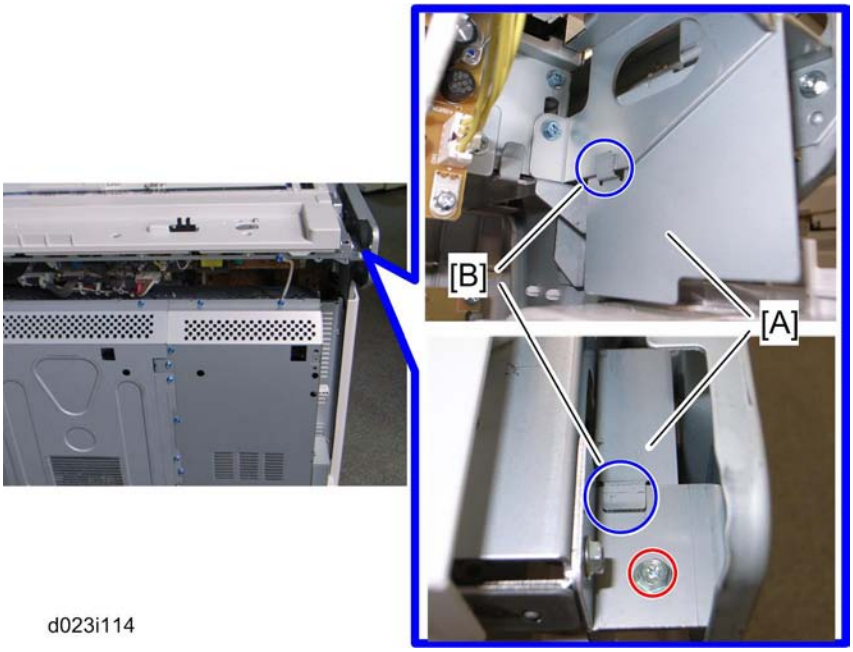


12. Attach the bracket [A] with its two hooks [B] as shown above (🔩 x 1: M3x6).

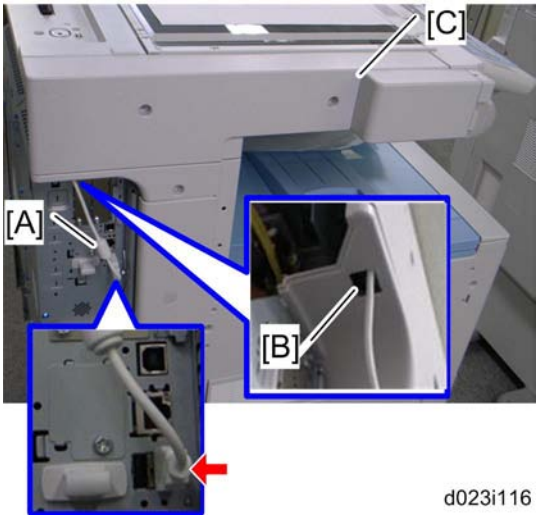


13. Put the USB cable [A] through the cutout [B] of the left frame cover.
14. Attach the scanner left cover [C] to the mainframe, and then connect the USB cable [A] to USB-A (front side) as shown above.

Note

- Make sure that the USB cable is inserted in USB-A (front side).

15. Reinstall the rear cover (🔩 x 8).
16. Plug in and turn on the mainframe.
17. Enter the SP mode, and then change the setting of SP1013-001 from “0” to “1”.

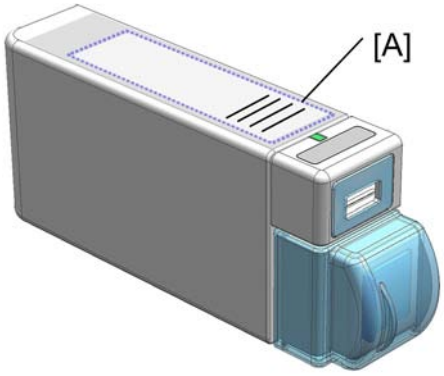

d027i118

18. Attach the decal [A] to the USB2.0/SD Slot as shown above.

## 2.22.3 TESTING THE SD CARD/USB SLOT

1. Insert an SD card or USB memory device in the slot.
   You can connect only one removable memory device at a time.
2. Close the media slot cover.
   If you leave the cover open, static electricity conducted through an inserted SD card could cause the machine to malfunction.
3. Make sure that no previous settings remain.
   If a previous setting remains, press the [Clear Modes] key.
4. Place an original on the exposure glass.
5. Press [Store File].
6. Press [Store to Memory Device].
7. Press [OK].
8. Press the [Start] key.
   When writing is complete, a confirmation message appears.
9. Press [Exit].
10. Remove the memory device from the media slot.
    Do not remove the memory device while writing is in process.

# 2.23 ANTI-CONDENSATION HEATER (SCANNER)

## 2.23.1 INSTALLATION PROCEDURE

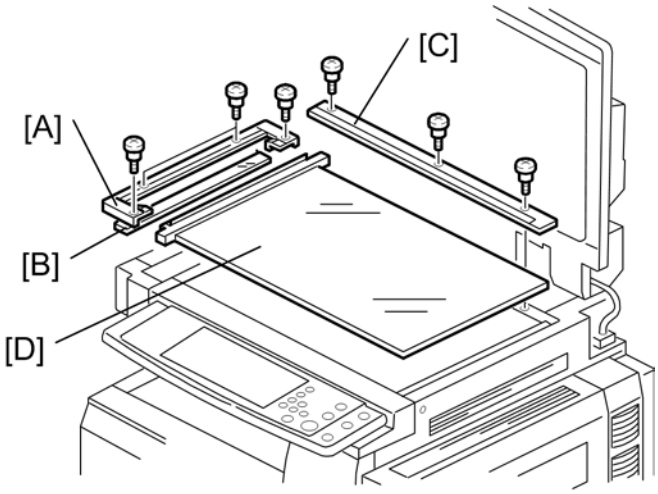


b230i207a

1. Rear cover (see "Rear Cover" in the "Replacement and Adjustment" section)
2. Open the ARDF or platen cover.
3. Glass cover [A] (🖉 x 4)
4. ARDF exposure glass [B]
5. Rear scale [C] (🖉 x 3)
6. Exposure glass with left scale [D]

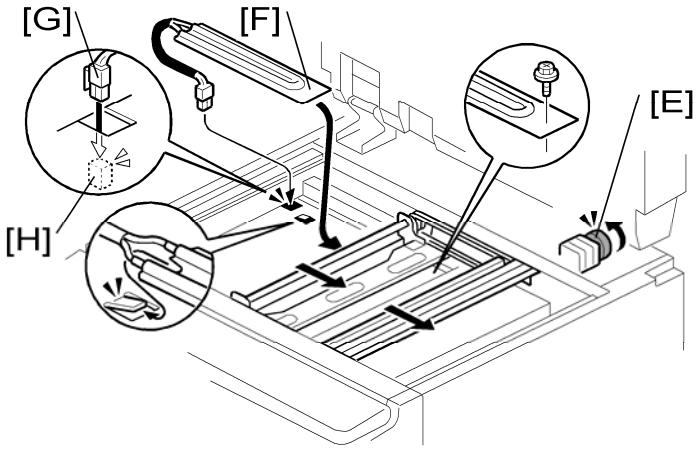


7. Move the scanner carriage to the right side by rotating the scanner motor [E].
8. Install the heater [F] in the scanner unit (🖉 x 1, hook)
9. Put the connector [G] through the cutout.
10. Connect it to the connector [H] (blue and red cords) in the frame of the machine.
11. Reassemble the machine.

# 2.24 TRAY HEATER

## 2.24.1 INSTALLATION PROCEDURE

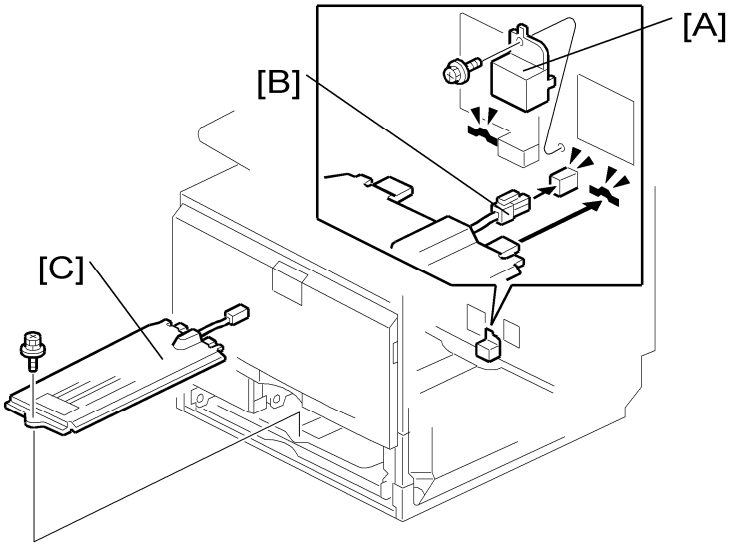


1. Remove trays 1 and 2 from the machine.
2. Remove the connector cover [A] (🖉 x 1).
3. Connect the connector [B] of the heater to the connector of the main machine.
4. Install the heater [C] inside the machine (🖉 x 1)
5. Reassemble the machine.

# 2.25 ANTI-CONDENSATION HEATER TYPE A

## 2.25.1 COMPONENT CHECK

| No. | Description | Q'ty |
|---|---|---|
| 1 | Tray Heater | 1 |
| 2 | On-Standby Decal | 1 (-90) or 2 (-91) |
| 3 | Harness 2 (For D387) | 1 |
| 4 | Harness 1 (For D351/D352) | 1 |
| 5 | Screw M4 X 10 | 2 |
| - | Installation Procedure | 1 |

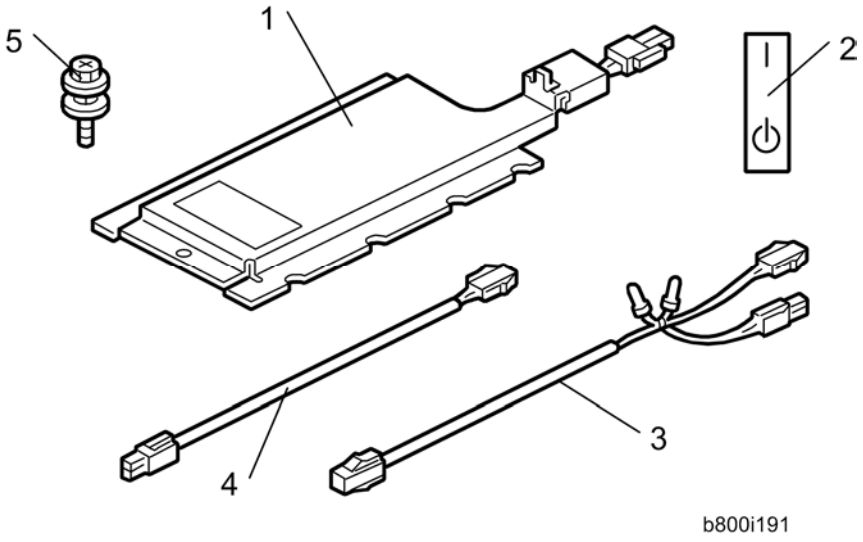

## 2.25.2 INSTALLATION PROCEDURE

**CAUTION**

- Unplug the machine power cord before starting the following procedure.
- Do the following procedure not to damage any harnesses.
- Check that all harnesses are not damaged nor pinched after installation.

### *For installing the tray heater in D351*

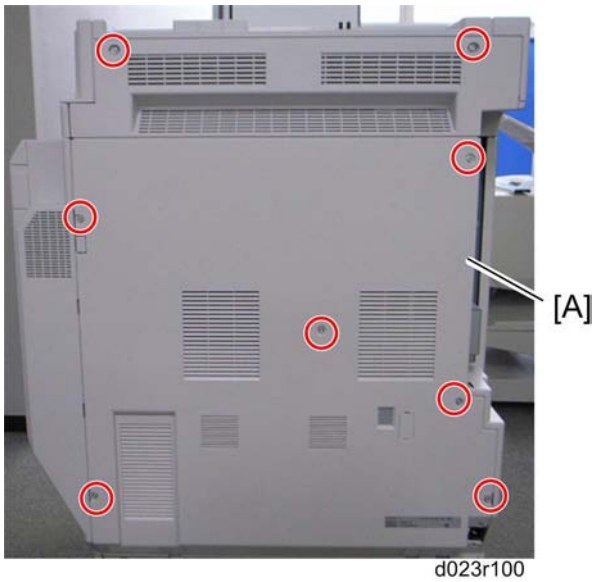


1. Rear cover [A] (☞ x 8)
2. Pull out the two trays in the optional paper feed unit.

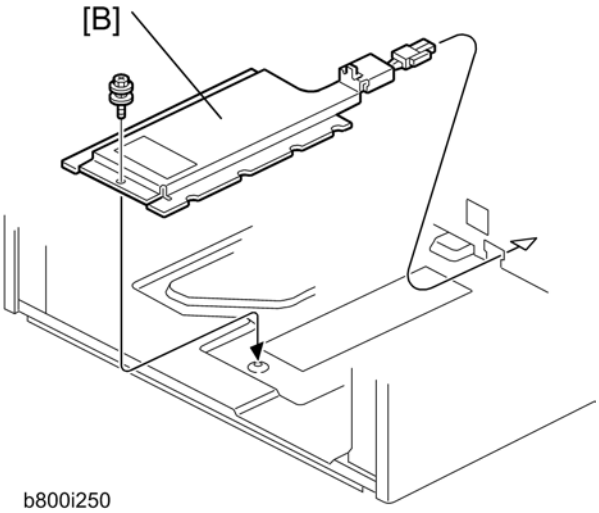


3. Install the tray heater [B] in the optional paper feed unit (☞ x 1).

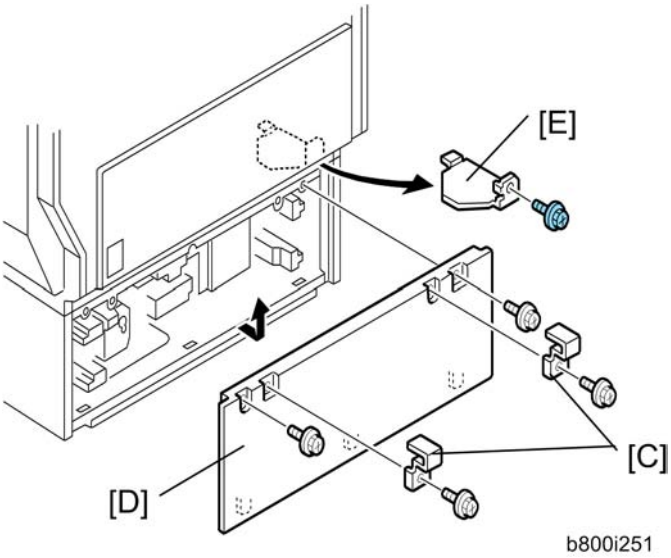


4. Remove the two securing brackets [C] (🖉 x 1 each), and then the rear cover [D] of the optional paper feed unit (🖉 x 2).
5. Remove the harness cover bracket [E] (🖉 x 1).

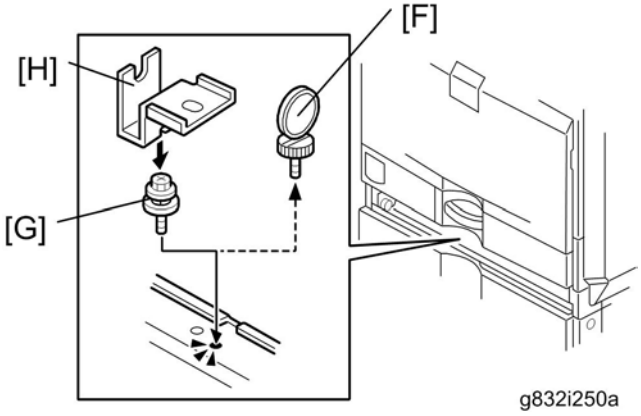


6. Pull out tray 2 from the mainframe.
7. Replace the shoulder screw [F] with the washer screw [G], using securing bracket [H] (🖉 x 1).

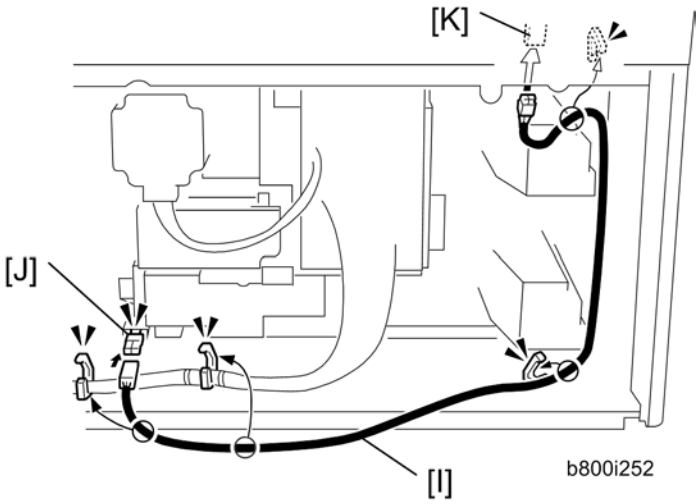


8. Connect the harness [I] to the connector [J] of the tray heater.
9. Route the harness [I] as shown and clamp it with four clamps.
10. Connect the harness [I] to the connector [K] of the mainframe.
11. Reassemble the mainframe and optional paper feed unit.

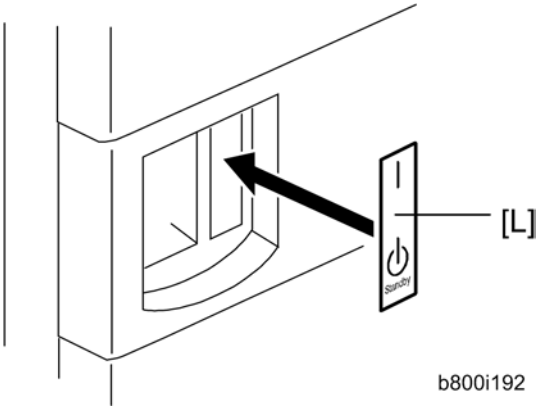


12. Attach the on/standby decal [L] to the right-hand side of the main power switch.

### *Installing the Tray Heater in D352*

1. Remove the rear cover of the mainframe (☛ step 1 in For Installing the Tray Heater in D321).
2. Pull out the LCT drawer.

Note

- If the right tray comes out with the left tray, push the right tray into the LCT.

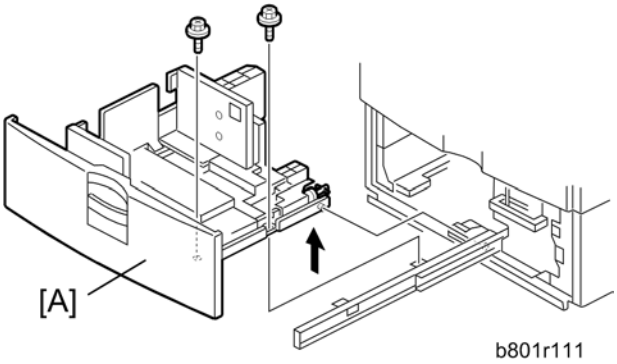


3. Left tray [A] (🖉 x 2)

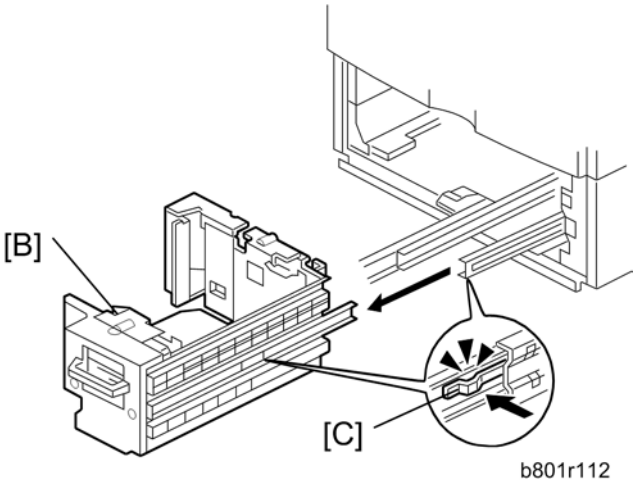


4. Remove the right tray [B] while pressing down the stopper [C].

Note

- When reinstalling the right tray, set the right tray on the guide rail and carefully push the tray in, making sure to keep the tray level.

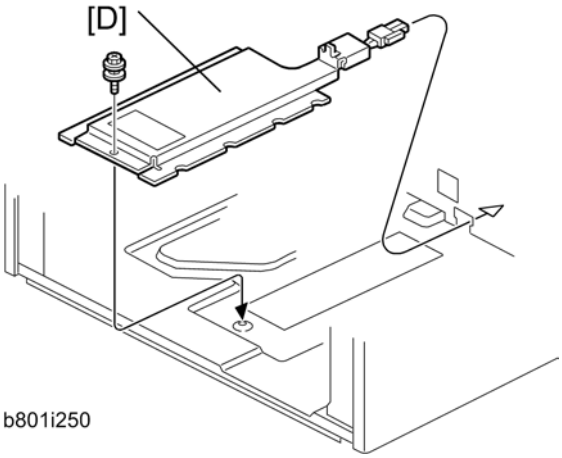


5. Install the tray heater [D] in the optional LCT (🖉 x 1).

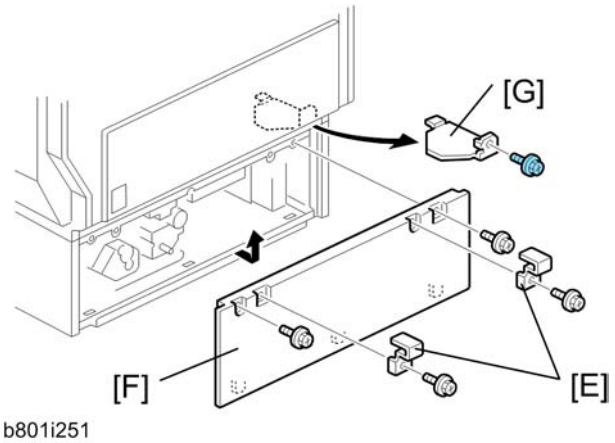


6. Remove the two securing brackets [E] (🖉 x 1 each), and the then rear cover [F] of the optional LCT (🖉 x 2).
7. Remove the harness cover bracket [G] (🖉 x 1).

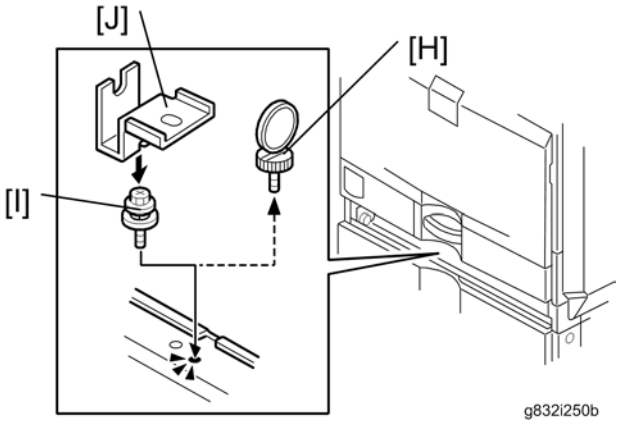


8. Pull out tray 2 from the mainframe.
9. Replace the shoulder screw [H] with the washer screw [I], using the securing bracket [J] (🖉 x 1).

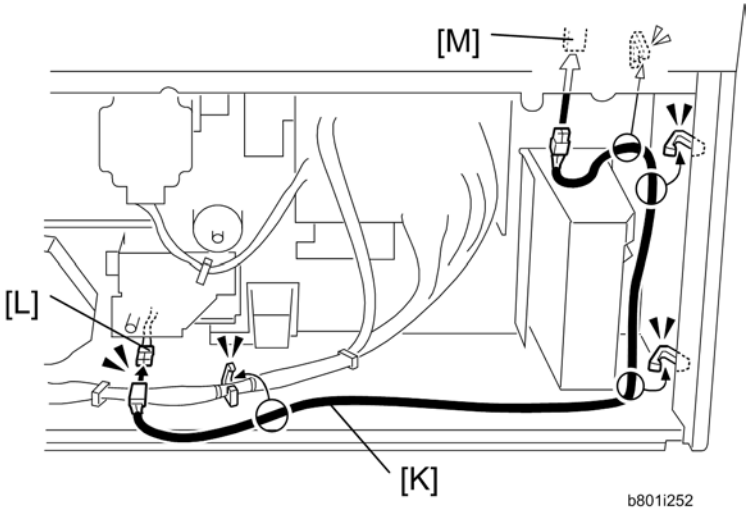

10. Connect the harness [K] to the connector [L] of the tray heater.
11. Route the harness [K] as shown and clamp it with four clamps (x 4).
12. Connect the harness [K] to the connector [M] of the mainframe.
13. Reassemble the mainframe and optional LCT.

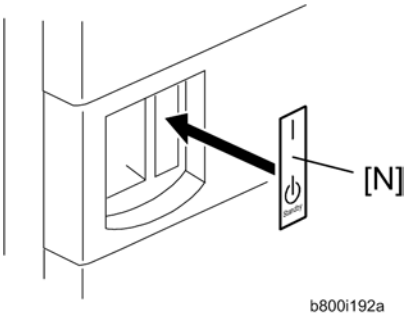


14. Reassemble the mainframe and optional paper feed unit.
15. Attach the on/standby decal [N] to the right-hand side of the main power switch.

### *For Installing the Tray Heater in D387*

1. Remove the rear cover of the mainframe (☛ step 1 in For Installing the Tray Heater in D321).
2. Pull out the tray in the optional paper tray.

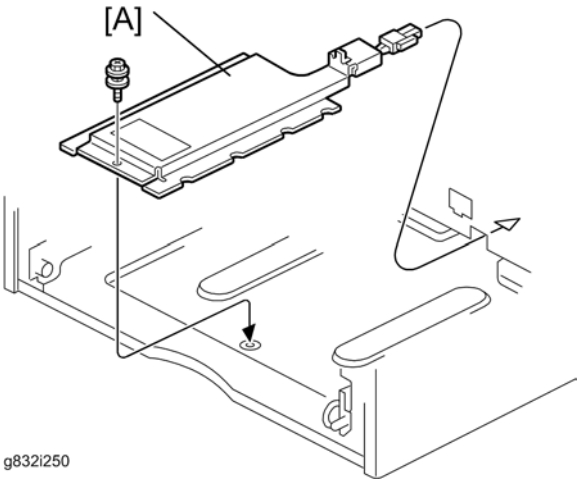


3. Install the tray heater [A] in the optional paper tray (x 1).

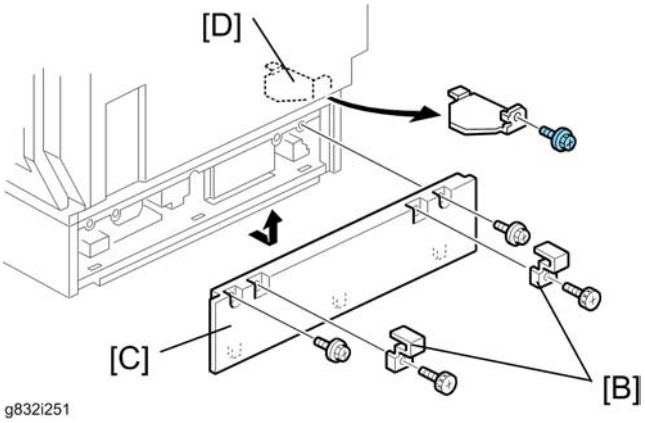


4. Remove the two securing brackets [B] (☞ x 1 each), and then the rear cover [C] of the optional paper tray (☞ x 2).
5. Remove the harness cover bracket [D] (☞ x 1).

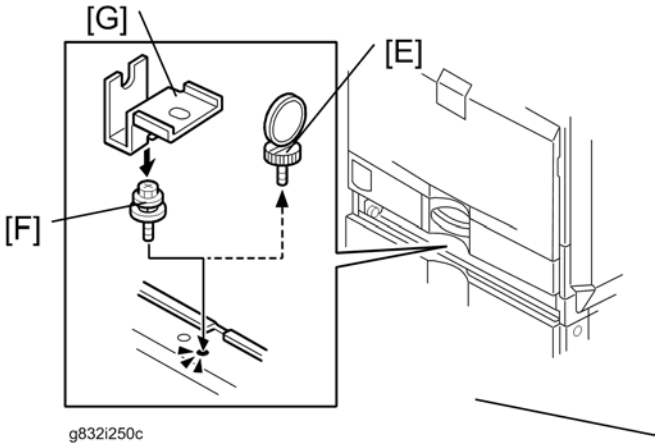


6. Pull out tray 2 from the mainframe.
7. Replace the shoulder screw [E] with the washer screw [F], using securing bracket [G] (☞ x 1).

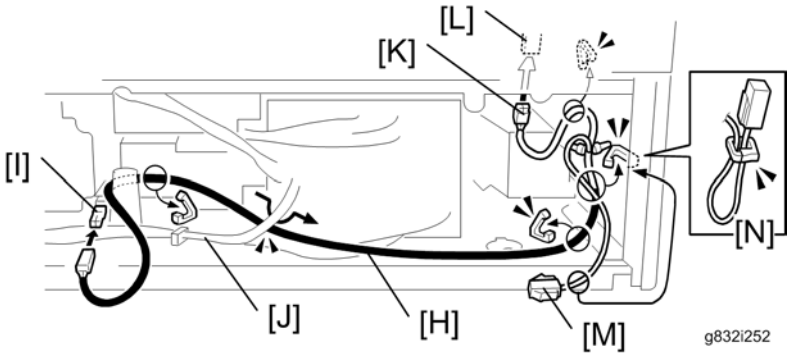


1. Connect the harness [H] to the connector [I] of the tray heater.
2. Route the harness [H] as shown and clamp it with four clamps (☞ x 4).

Note

- Make sure that the harness [H] is placed below the harness [J].

3. Connect one harness [K] of the two-way harness to the connector [L] of the mainframe.

Note

- The harness [K] of the two-way harness, which has two binds, is for the connector of the mainframe. The harness [M], which has one bind, is for another optional paper feed unit.

4. Clamp the other harness [M] of the two-way harness as shown [N] if you do not install another optional paper feed unit.
5. Reassemble the mainframe and optional paper tray.

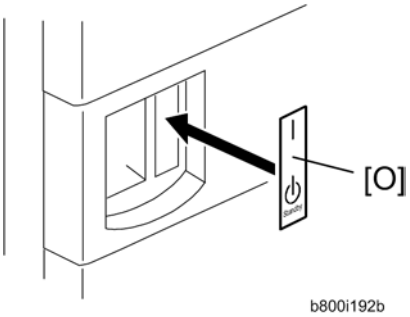


6. Attach the on/standby decal [O] to the right-hand side of the main power switch.

# 2.26 CONTROLLER OPTIONS

## 2.26.1 OVERVIEW

This machine has I/F card slots for optional I/F connections and SD card slots applications. After you install an option, check that the machine can recognize it (see “Check All Connections” at the end of this section).

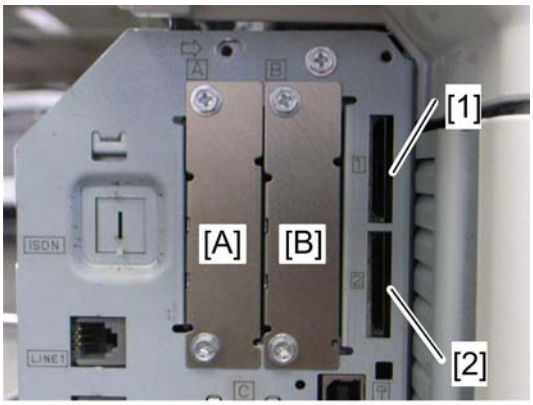


d027i400

### *I/F Card Slots*

- Slot A is used for one of the optional I/F connections (only one can be installed): IEEE1284, IEEE802.11a/g, g (Wireless LAN), Bluetooth, or Remote Communication Gate.
- Slot B is used for the File Format Converter or Remote Communication Gate.

### *SD Card Slots*

- Slot 1 is used for one of the optional applications: PostScript 3, Data Overwrite Security Unit, PictBridge
- Slot 2 is used for installing the Browser Unit, HDD Encryption unit, VM card or for service only (for example, updating the firmware).

## 2.26.2 SD CARD APPLI MOVE

### *Overview*

The service program “SD Card Appli Move” (SP5-873) lets you copy application programs from one SD card to another SD card.

Slot 1 is used to store application programs. But there are 3 possible applications (PostScript 3, DOS unit, PictBridge). You cannot run application programs from Slot 2. However you can move application programs from Slot 2 to Slot 1 with the following procedure.

For this model, the printer/scanner card in slot 1 has enough space for the PictBridge and the DOS applications. Use the card that is already in slot 1 (printer/scanner card). Do not remove the printer/scanner card from slot 1.

Make sure that the target SD card has enough space.

1. Enter SP5873 “SD Card Appli Move”.
2. Then move the application from the SD Card in Slot 2 to the SD Card in Slot 1.

   Note

   - Do steps 1-2 again if you want to move another application program.
3. Exit the SP mode.

**Be very careful when you do the SD Card Appli Move procedure:**

- The data necessary for authentication is transferred with the application program from an SD card to another SD card. Authentication fails if you try to use the SD card after you copy the application program from one card to another card.
- Do not use the SD card if it has been used before for other purposes. Normal operation is not guaranteed when such an SD card is used.

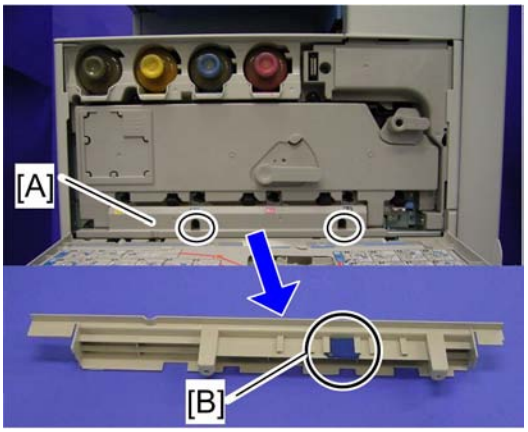


- Remove the cover [A] (🔩 x 2), and then keep the SD card in the place [B] after you copy the application program from one card to another card. This is done for the following reasons:

    - The SD card can be the only proof that the user is licensed to use the application program.
    - You may need to check the SD card and its data to solve a problem in the future.
- You cannot copy PostScript application and VM card to another SD card. You have to copy the other application (PictBridge, DOS Unit) to the SD card that stores the PostScript application or VM card.

### *Move Exec*

The menu “Move Exec” (SP5-873-001) lets you copy application programs from the original SD card to another SD card.

Important

- Do not turn ON the write protect switch of the system SD card or application SD card on the machine. If the write protect switch is ON, a download error (e.g. Error Code 44) occurs during a firmware upgrade or application merge.

1. Turn the main switch off.
2. Make sure that an SD card is in SD Card Slot 1. The application program is copied to this SD card.
3. Insert the SD card with the application program in SD Card Slot 2.The application program is copied from this SD card.
4. Turn the main switch on.
5. Start the SP mode.
6. Select SP5-873-001 “Move Exec.”
7. Follow the messages shown on the operation panel.
8. Turn the main switch off.
9. Remove the SD card from SD Card Slot 2.
10. Turn the main switch on.
11. Check that the application programs run normally.

### *Undo Exec*

“Undo Exec” (SP5-873-002) lets you copy back application programs from an SD card to the original SD card. You can use this program when, for example, you have mistakenly copied some programs by using Move Exec (SP5-873-001).

Important

- Do not turn ON the write protect switch of the system SD card or application SD card on the machine. If the write protect switch is ON, a download error (e.g. Error Code 44) occurs during a firmware upgrade or application merge.

1. Turn the main switch off.
2. Insert the original SD card in SD Card Slot 2. The application program is copied back into this card.
3. Insert the SD card with the application program in SD Card Slot 1.The application program is copied back from this SD card.
4. Turn the main switch on.
5. Start the SP mode.
6. Select SP5-873-002 “Undo Exec.”
7. Follow the messages shown on the operation panel.
8. Turn the main switch off.
9. Remove the SD card from SD Card Slot 2.

   Note

   - This step assumes that the application programs in the SD card are used by the machine.
10. Turn the main switch on.
11. Check that the application programs run normally.
12. Make sure that the machine can recognize the option (see ‘Check All Connections’ at the end of this section).

## 2.26.3 POSTSCRIPT 3

**CAUTION**

- Unplug the main machine power cord before you do the following procedure.

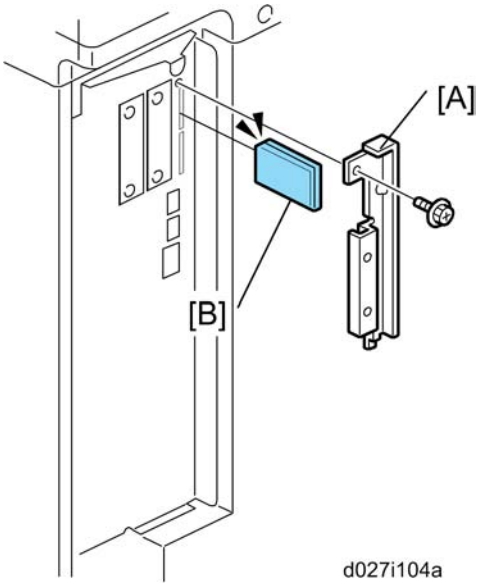


1. Remove the SD-card slot cover [A] from SD card slots (🔩 x 1).
2. Turn the SD-card label face [B] to the rear of the machine. Then push it slowly into slot 1 until you hear a click.
   - Only one SD card slot is available for applications provided on SD cards.
   - If the customer wants to use two or more applications from SD cards, the applications must be moved to a single SD card.
   - The PostScript3 application and fonts cannot be moved to another SD card. However, other applications can be moved onto the PostScript3 SD card.
3. Attach the slot cover [A] (🔩 x 1).

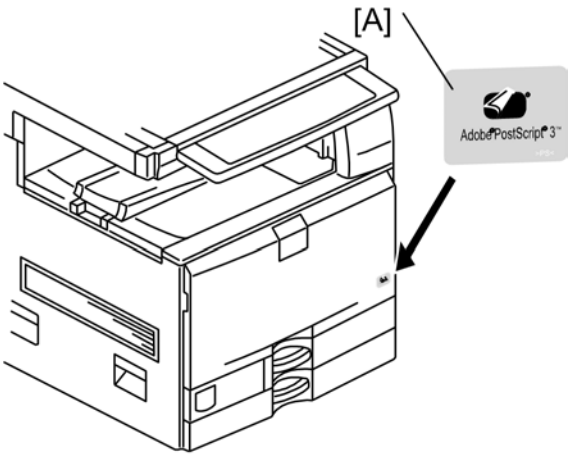


d027i504

4. Attach the “Adobe PostScript 3” decal [A] to the front door.
5. Make sure that the machine can recognize the option (see ‘Check All Connections’ at the end of this section).

## 2.26.4 FILE FORMAT CONVERTER

**CAUTION**

- Unplug the main machine power cord before you do the following procedure.

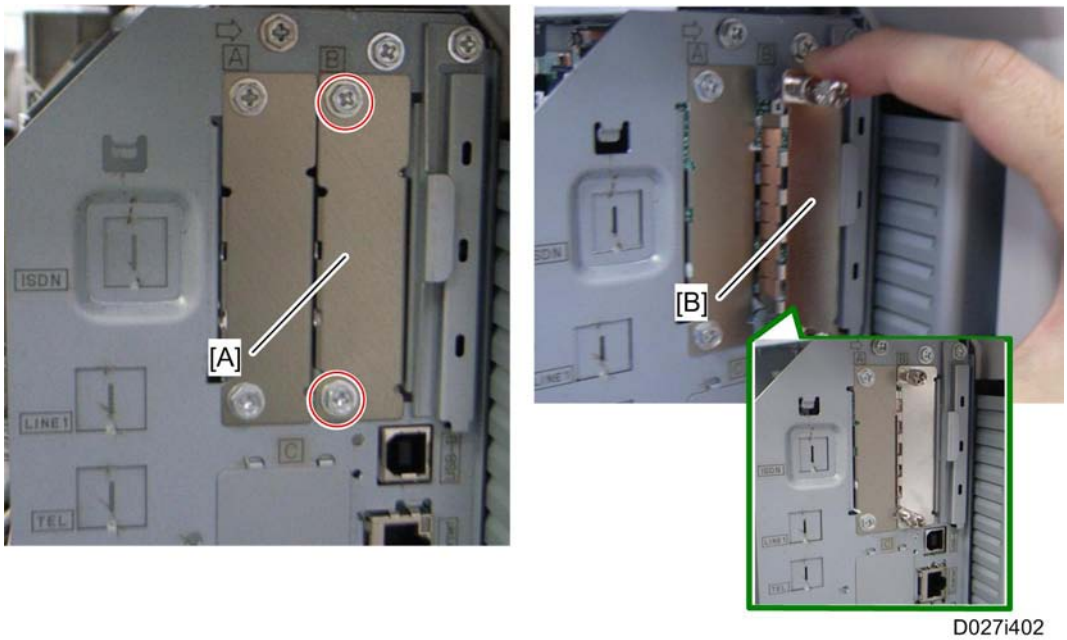


D027i402

1. Remove the slot cover [A] (🔩 x 2).
2. Install the file format converter [B] into slot B and then fasten it with screws.
3. Plug in the machine and turn on the main power switch.
4. Check or set the following SP codes with the values shown below.

| SP No. | Title | Setting |
|---|---|---|
| SP5-836-001 | Capture Function (0:Off 1:On) | "1" |
| SP5-836-002 | Panel Setting | "0" |

5. Check the operation.
6. Make sure that the machine can recognize the option (see ‘Check All Connections’ at the end of this section).

## 2.26.5 IEEE1284

### *Installation Procedure*

**⚠CAUTION**

- Unplug the main machine power cord before you do the following procedure.

You can only install one of the following network interfaces at a time: (IEEE 802.11 a/g, g (Wireless LAN), IEEE1284, Bluetooth).

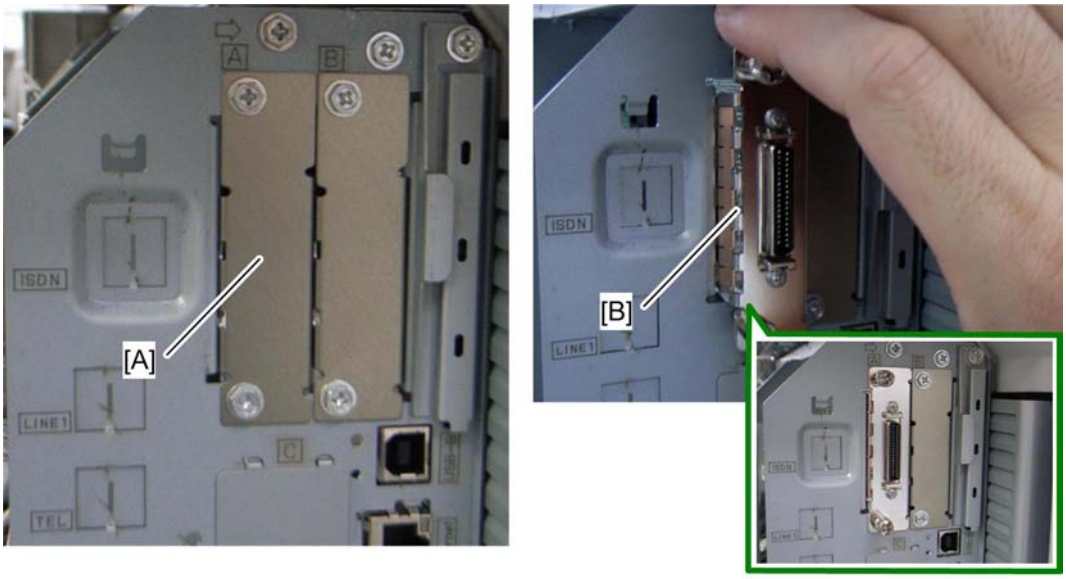


D027i404

1. Remove the slot cover [A] (🔩 x 2).
2. Install the interface board [B] (Knob-screw x 2) into the slot A.
3. Make sure that the machine can recognize the option (see ‘Check All Connections’ at the end of this section).

## 2.26.6 IEEE 802.11 A/G, G (WIRELESS LAN)

### *Installation Procedure*

**CAUTION**

- Unplug the main machine power cord before you do the following procedure.

You can only install one of the following network interfaces at one time: (IEEE 802.11 a/g, g (Wireless LAN), IEEE1284, Bluetooth).

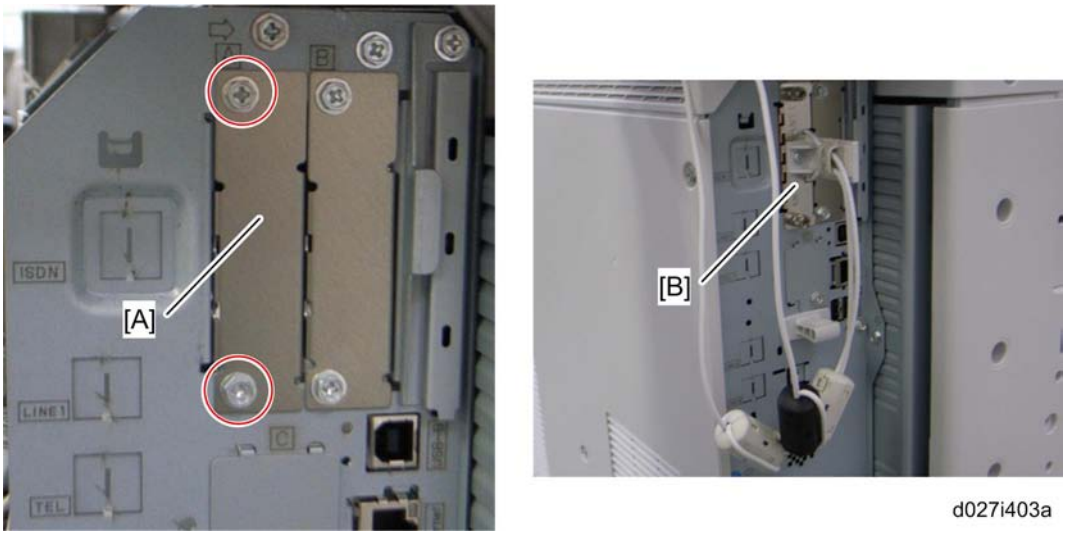


1. Remove the slot cover [A] from the board slot (🔩 x 2).
2. Install the wireless LAN board [B] (Knob-screw x 2) into the board slot.
3. Make sure that the machine can recognize the option (see 'Check All Connections' at the end of this section).

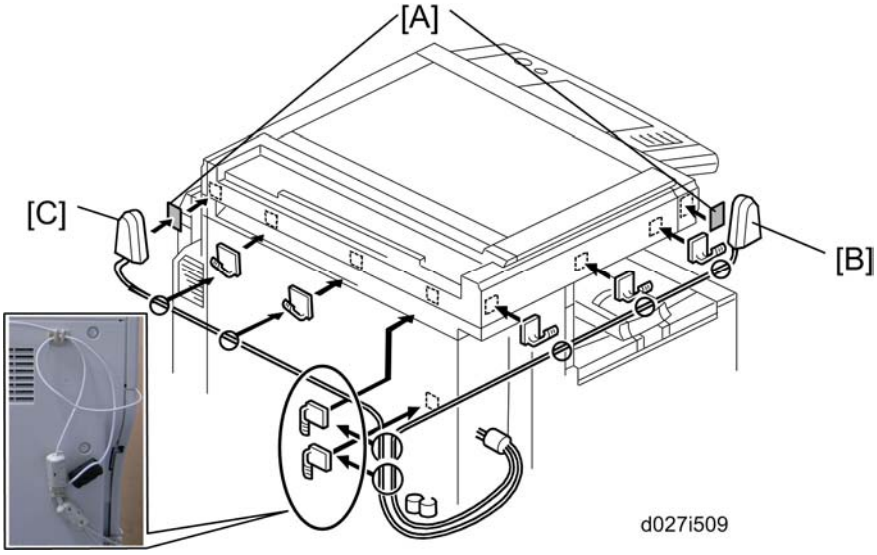


4. Peel off the double-sided tapes on the Velcro fasteners [A], and then attach them [A] at the front left and rear left of the machine.

5. Attach "ANT1" (having a black ferrite core) [B] to the front left of the machine.
6. Attach "ANT2" (having a white ferrite core) [C] to the rear right of the machine.

Note

- "ANT1" is a transmission/reception antenna and "ANT2" is a reception antenna. Do not attach them at the wrong places.

7. Attach the clamps as shown above.
8. Wire the cables and clamp them (x 7).

Note

- Make sure that the cables are not slack. Keep them wired tightly along the covers.

You may have to move the machine if the reception is not clear.

- Make sure that the machine is not located near an appliance or any type of equipment that generates strong magnetic fields.
- Put the machine as close as possible to the access point.

**Installing Hardware Combinations**

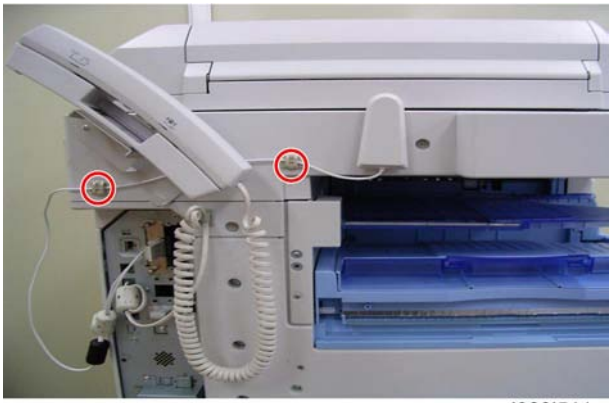

d023i511

- Refer to the above picture when installing the handset and the USB2.0/SD.

## *UP Mode Settings for Wireless LAN*

Enter the UP mode. Then do the procedure below to perform the initial interface settings for IEEE 802.11 a/g, g. These settings take effect every time the machine is powered on.

Note

- You cannot use the wireless LAN if you use Ethernet.

1. Press the “User Tools/Counter” key.
2. On the touch panel, press “System Settings”.

Note

- The Network I/F (default: Ethernet) must be set for either Ethernet or wireless LAN.

3. Select “Interface Settings”.
4. Press “Wireless LAN”. Only the wireless LAN options show.
5. Communication Mode. Select either “802.11 Ad hoc”, “Ad hoc” or “Infrastructure”.
6. SSID Setting. Enter the SSID setting. (The setting is case sensitive.)
7. Channel. You need this setting when Ad Hoc Mode is selected.

   Range: 1 to 14 (default: 11)

   Note

   - The allowed range for the channel settings may vary for different countries.
8. WEP (Encryption) Setting. The WEP (Wired Equivalent Privacy) setting is designed to protect wireless data transmission. The same WEP key is required on the receiving side in order to unlock encoded data. There are 64 bit and 128 bit WEP keys.

   **WEP:**

   Selects “Active” or “Inactive” (“Inactive” is default.).

   Range of Allowed Settings:

   64 bit: 10 characters

   128 bit: 26 characters
9. Transmission Speed. Press the Next button to show more settings. Then select the transmission speed for the mode: Auto, 11 Mbps, 5.5 Mbps, 2 Mbps, 1 Mbps (default: Auto). This setting should match the distance between the closest machine or access point. This depends on which mode is selected.

   Note

   - For the Ad Hoc Mode, this is the distance between the machine and the closest PC in the network. For the Infrastructure Mode, this is the distance between the machine and the closest access point.

   11 Mbps: 140 m (153 yd.)

   5.5 Mbps: 200 m (219 yd.)

   2 Mbps: 270 m (295 yd.)

   1 Mbps: 400 m (437 yd.)
10. Press “Return to Default” to initialize the wireless LAN settings.

    Press “Yes” to initialize the following settings:

    - Transmission mode
    - Channel
    - Transmission Speed
    - WEP
    - SSID
    - WEP Key

### *SP Mode and UP Mode Settings for IEEE 802.11 a/g, g Wireless LAN*

The following SP commands and UP modes can be set for IEEE 802.11 a/g, g.

| SP No. | Name | Function |
|---|---|---|
| 5840-006 | Channel MAX | Sets the maximum range of the channel settings for your country. |
| 5840-007 | Channel MIN | Sets the minimum range of the channels settings allowed for your country. |
| 5840-011 | WEP Key Select | Used to select the WEP key (Default: 00). |
| UP mode | Name | Function |
| | SSID | Used to confirm the current SSID setting. |
| WEP Key | Used to confirm the current WEP key setting. | |
| WEP Mode | Used to show the maximum length of the string that can be used for the WEP Key entry. | |

## 2.26.7 BLUETOOTH

**CAUTION**

- Unplug the main machine power cord before you do the following procedure.

You can only install one of the following network interfaces at a time: (IEEE 802.11 a/g, g (Wireless LAN), IEEE1284, Bluetooth).

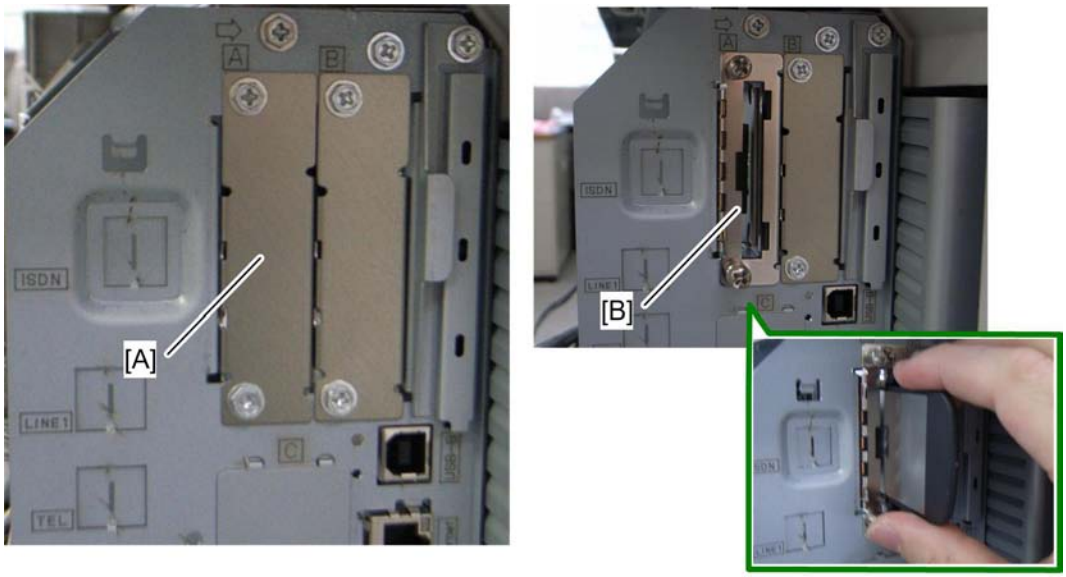


D027i405

1. Remove the slot cover [A] (🖉 x 2).
2. Install the Bluetooth board [B] (Knob-screw x 2) into the slot A.
3. Insert the Bluetooth card into the Bluetooth card adaptor.
4. Install the Bluetooth card adaptor on the Bluetooth board.
5. Attach the antenna cap to the Bluetooth board.
6. Make sure that the machine can recognize the option (see ‘Check All Connections’ at the end of this section).

## 2.26.8 DATA OVERWRITE SECURITY UNIT TYPE H (D377)

### *Before You Begin the Procedure*

1. Confirm that the Data Overwrite Security unit SD card is the correct type for the machine. The correct type for this machine is "**Type H"**.

   Important

   - If you install any version other than "**Type H**", you will have to replace the NVRAM and do this installation procedure again.
2. Make sure that the following settings are not at their factory default values:
   - Supervisor login password
   - Administrator login name
   - Administrator login password

   If any of these settings is at a factory default value, tell the customer these settings must be changed before you do the installation procedure.
3. Make sure that “Admin. Authentication” is ON.

   [System Settings] – [Administrator Tools] – [Administrator Authentication Management] - [Admin. Authentication]

   If this setting is OFF, tell the customer this setting must be ON before you do the installation procedure.
4. Make sure that “Administrator Tools” is enabled (selected).

   [System Settings] – [Administrator Tools] – [Administrator Authentication Management] - [Available Settings]

   If this setting is disabled (not selected), tell the customer this setting must be enabled (selected) before you do the installation procedure.

### *Seal Check and Removal*

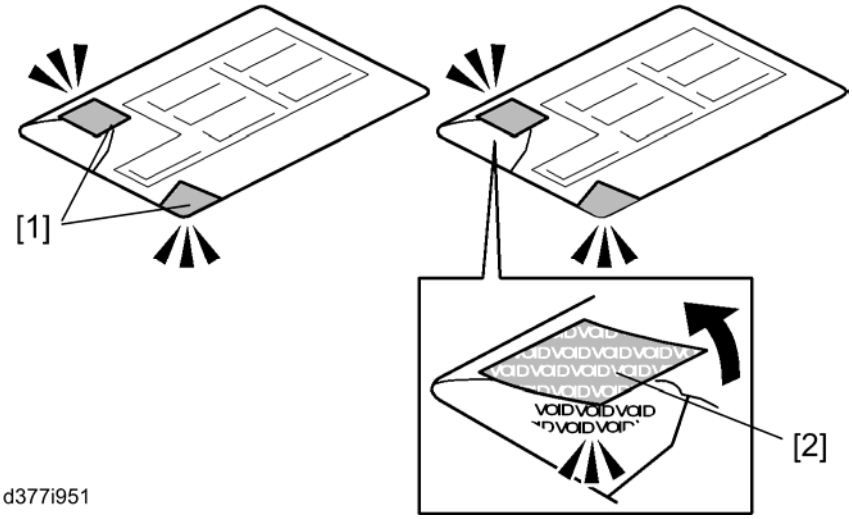


d377i951

**CAUTION**

- You must check the box seals to make sure that they were not removed after the items were sealed in the box at the factory before you do the installation.

1. Check the box seals [1] on each corner of the box.
   - Make sure that a tape is attached to each corner.
   - The surfaces of the tapes must be blank. If you see “VOID” on the tapes, do not install the components in the box.
2. If the surfaces of the tapes do not show “VOID”, remove them from the corners of the box.
3. You can see the “VOID” marks [2] when you remove each seal. In this condition, they cannot be attached to the box again.

### *Installation Procedure*

**CAUTION**

- Unplug the main machine power cord before you do the following procedure.

Note

- You must install the Data Overwrite Security unit in SD Card slot 1. However, the Postscript option and others are also installed in SD Card slot 1. You must do the "SD Card Appli Move" procedure first if you want to install the Data Overwrite Security unit.

1. Turn off the main power switch if the machine is turned on.
2. Disconnect the network cable if it is connected.

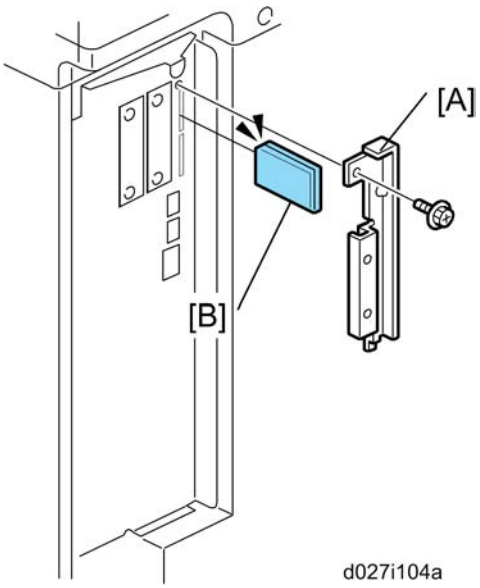


3. Remove the slot cover [A] for SD cards (☞ x 1).
4. Turn the SD-card label face [B] to the rear of the machine. Then push it slowly into slot 1 until you hear a click.
5. Connect the network cable if it needs to be connected.
6. Turn on the main power switch.
7. Go into the SP mode and push “EXECUTE” with SP5-878-001.
8. Exit the SP mode and turn off the operation switch. Then turn off the main power switch.
9. Turn on the machine power.
10. Do SP5990-005 (SP print mode Diagnostic Report).
11. Make sure the ROM number and firmware version in area [a] of the diagnostic report are the same as those in area [b].
    - [a]: “ROM Number/Firmware Version” – “HDD Format Option”
    - [b]: “Loading Program” – “GW5a_zoffym”

| Diagnostic Report: | “ROM No. / Firmware Version” [a] | “Loading Program” [b] |
|---|---|---|
| Data Overwrite Security Unit | HDD Format Option: D3775912 / 1.00m | GW5a_zoffym: D3775912 / 1.00m |

Important

- The ROM number and firmware version number change when the firmware is

upgraded. However, the important thing is to make sure the numbers in [a] are the same as the numbers in [b].

- If the ROM numbers are not the same, or the version numbers are not the same, this means the unit was not installed correctly.

If this happens:

Make sure of the unit type (must be Type H).

12. Go into the User Tools mode, and select System Settings> Administrator Tools> Auto Erase Memory Setting> On.
13. Exit the User Tools mode.

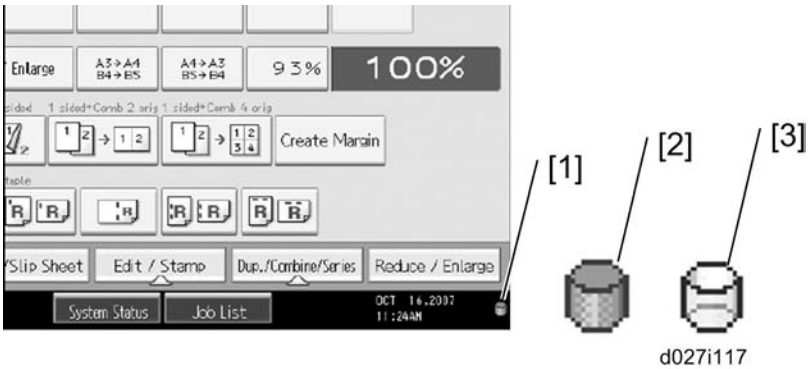


14. Check the display and make sure that the overwrite erase icon [1] shows.
15. Check the overwrite erase icon.
    - The icon [2]: This icon is lit when there is temporary data to be overwritten, and blinks during overwriting.
    - The icon [3]: This icon is lit when there is no temporary data to be overwritten.

## 2.26.9 HDD ENCRYPTION UNIT

### *Before You Begin the Procedure*

1. Make sure that the following settings are not at the factory default settings:
    - Supervisor login password
    - Administrator login name
    - Administrator login password

    **Important**

    - These settings must be set up by the customer before the HDD Encryption unit can be installed.
2. Confirm that "Admin. Authentication" is on:

    [User Tools] > "System Settings"> "Administrator Tools"> "Administrator Authentication Management"> "Admin. Authentication"> "On"

    If this setting is "Off", tell the customer that this setting must be "On" before you can do

the installation procedure.

3. Confirm that "Administrator Tools" is selected and enabled:
   [User Tools]> "System Settings"> "Administrator Tools"> "Administrator Authentication Management"> "Available Settings"

   Note

   - "Available Settings" is not displayed until Step 2 is done.

   If this setting is not selected, tell the customer that this setting must be selected before you can do the installation procedure.

### *Seal Check and Removal*

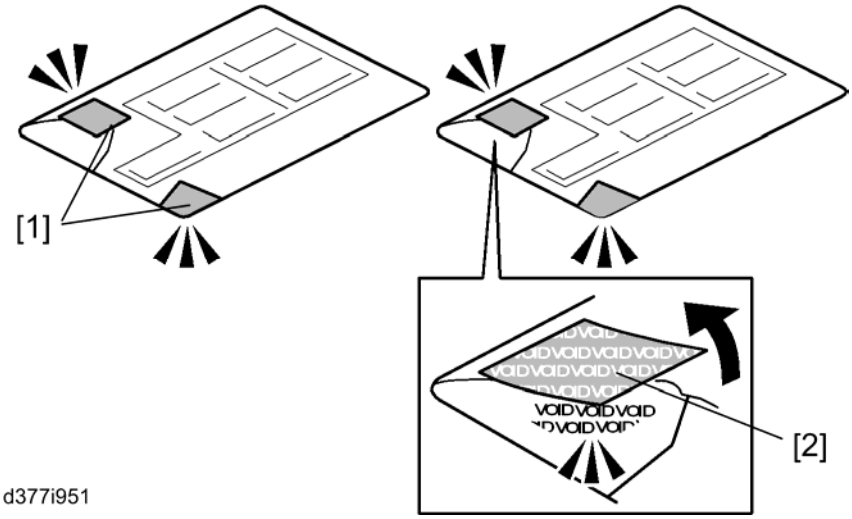


d377i951

**CAUTION**

- You must check the box seals to make sure that they were not removed after the items were sealed in the box at the factory before you do the installation.

1. Check the box seals [1] on each corner of the box.
   - Make sure that a tape is attached to each corner.
   - The surfaces of the tapes must be blank. If you see “VOID” on the tapes, do not install the components in the box.
2. If the surfaces of the tapes do not show “VOID”, remove them from the corners of the box.
3. You can see the “VOID” marks [2] when you remove each seal. In this condition, they cannot be attached to the box again.

### *Installation Procedure*

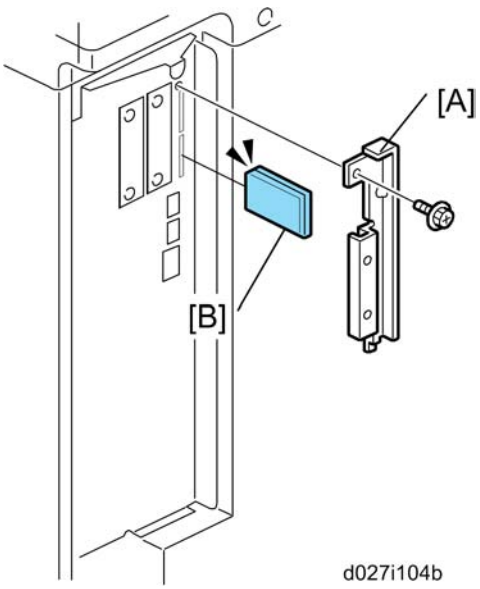


1. Remove the SD card slot cover [A] (🖉 x 1).
2. Turn the SD-card label [B] to face the rear of the machine. Then push it slowly into slot 2 until you hear a click.
3. Turn on the main power switch, and then enter the SP mode.
4. Select SP5878-002, and then press "Execute" on the LCD.
5. Exit the SP mode after "Completed" is displayed on the LCD.
6. Turn off the main power switch.
7. Remove the SD card from slot 2.
8. Attach the SD card slot cover [A] (🖉 x 1).

### *Recovery from a Device Problem*

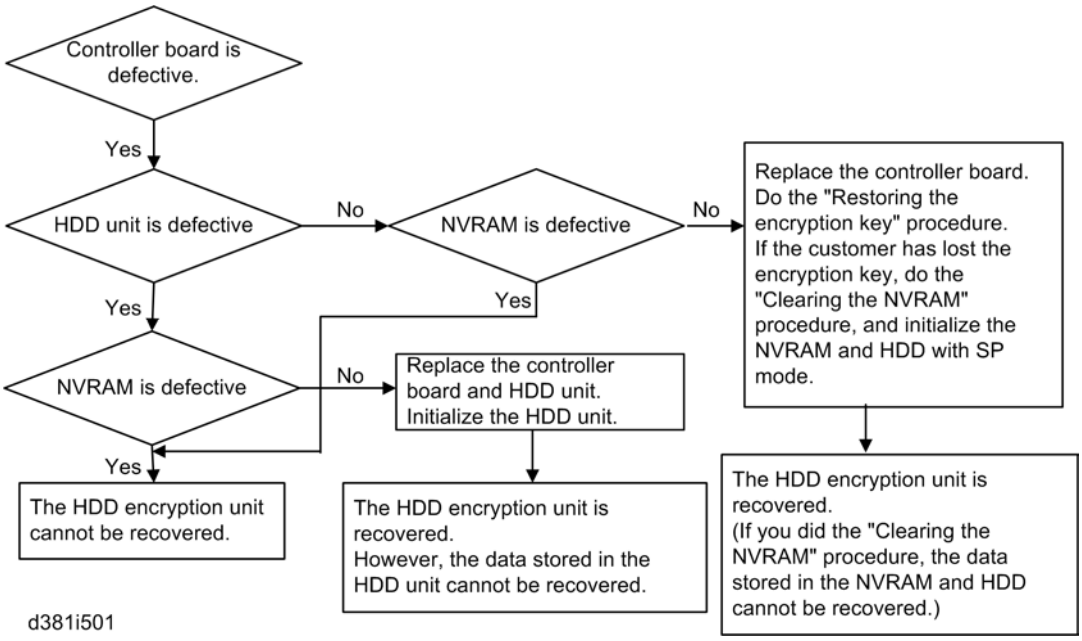


### *Restoring the encryption key*

When replacing the controller board for a model in which the HDD encryption unit has been installed, updating the encryption key is required.

1. Prepare an SD card which is initialized.
2. Make the "restore_key" folder in the SD card.
3. Make an "nvram_key.txt" file in the "restore_key" folder in the SD card.
4. Ask an administrator to input the encryption key (this has been printed out earlier by the user) into the "nvram_key.txt" file.
5. Remove only the HDD unit (☛ p.4-196 "

HDD").

6. Turn on the main power switch.
7. Confirm that the prompt on the LCD tells you to install the SD card (storing the encryption key) in the machine.
8. Turn off the main power switch.
9. Insert the SD card that contains the encryption key into slot 2.
10. Turn on the main power switch, and the machine automatically restores the encryption key in the flash memory on the controller board.
11. Turn off the main power switch after the machine has returned to normal status.
12. Remove the SD card from slot 2.
13. Reinstall the HDD unit.



### *Clearing the NVRAM*

When replacing the controller board for a model in which the HDD encryption unit has been installed and a customer has lost the encryption key, clearing the NVRAM is required to recover the HDD encryption unit.

1. Prepare an SD card which is initialized.
2. Make the "restore_key" folder in the SD card.
3. Make an "nvram_key.txt" file in the "restore_key" folder in the SD card.
4. Input "nvclear" into the "nvram_key.txt" file.
5. Turn on the main power switch.
6. Confirm that the prompt on the LCD tells you to install the SD card (storing the encryption key) in the machine.
7. Turn off the main power switch.
8. Insert the SD card that contains “nvclear” into slot 2.
9. Turn on the main power switch, and the machine automatically restores the encryption key in the flash memory on the controller board.
10. Turn off the main power switch after the machine has returned to normal status.
11. Remove the SD card from slot 2.
12. Turn on the main power switch.
13. Initialize the NVRAM (SP5801-001) and HDD unit (SP5832-001) with SP mode.
14. The user must enable the HDD encryption unit with a user tool.

## 2.26.10 PICTBRIDGE

**CAUTION**

- Unplug the main machine power cord before you do the following procedure.

Note

- You must install the PictBridge option in SD Card slot 1. However, the Postscript option and the data overwrite security unit option are also installed in SD Card slot 1. You must do the SD Card Appli move procedure first if you have the postscript or data overwrite security unit option installed and you want to install the PictBridge unit.

You must install the USB Host Interface when using the PictBridge unit.

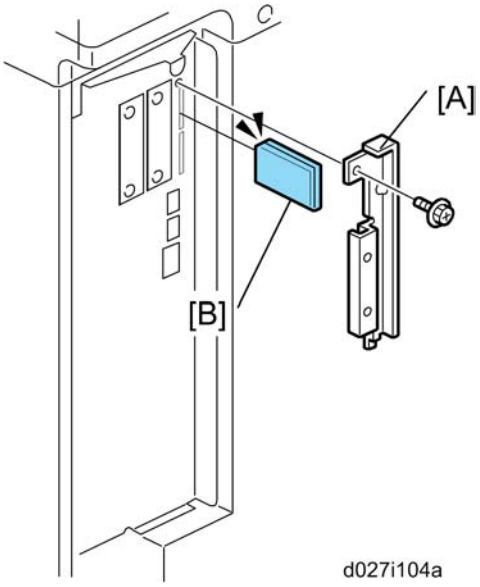


1. Remove the SD-card slot cover [A] for SD cards (🔩 x 1).
2. Turn the SD-card label face [B] to the rear of the machine. Then push it slowly into slot 1 until you hear a click.
3. Attach the SD-card slot cover [A] (🔩 x 1).
4. Make sure that the machine can recognize the option (see ‘Check All Connections’ at the end of this section).

## 2.26.11 VM CARD TYPE I

**The VM card application cannot be moved to another SD card. However, other applications can be moved onto the VM card.**

### *Installation Procedure*

1. Switch the machine off.

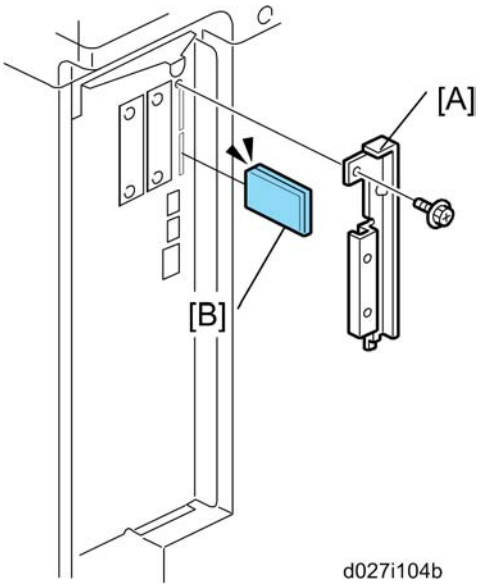


2. Remove the SD card slot cover [A] (🔩 x1).
3. Turn the SD-card label face [B] to the rear of the machine. Then push it slowly into slot 1 until you hear a click.
4. Reattach the SD card slot cover.
5. Switch the machine on.
6. On the operation panel, remove the bottom blank keytop and replace it with the keytop provided.
7. Attach the decal to the copier.

## 2.26.12 BROWSER UNIT TYPE B

### *Installation Procedure*

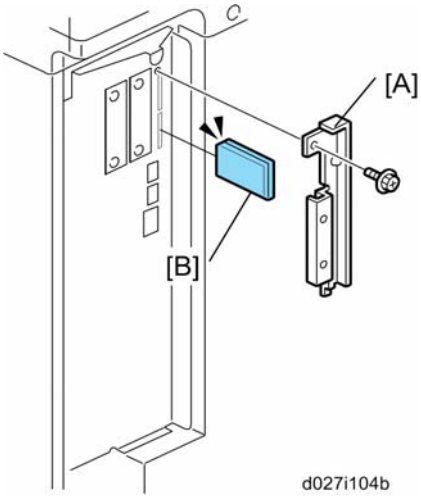


⟹ **Important**: The Browser Option can only be installed on one machine. Once the installation is complete it cannot be installed on any other machine after that, even if it is uninstalled from the original machine.

1. For models which have the VM card, do the following. Then continue with step 3:
   - Press “User tools” button to enter the User Tools mode.
   - Press “Extended Feature Settings” on the LCD.
   - Press “Extended Feature Settings” on the LCD again.
   - Press “Start up” tab.
   - Stop all SDK applications with touching application lines.
   - Exit UP mode, turn off the machine and unplug the power cord
   - Remove the slot cover for SD cards [A].
   - Remove the SD card (VM/JAVA) from SD slot 2 [B].
2. Turn off the machine and unplug the main machine power cord.
3. Turn the Browser SD card label face to the rear of the machine. Then push it slowly into the slot until you hear a click.
4. Plug in and turn on the main power switch.
5. Push the “User Tools” key.
   If an administrator setting is registered for the machine, steps 6 and 7 are required. Otherwise, skip to step 8.
6. Push the “Login/Logout” key.
7. Login with the administrator user name and password.
8. Touch “Extended Feature Settings” twice on the LCD.

9. Touch “Install” on the LCD.
10. Touch “SD card”.
11. Touch the “Browser” line.
12. Under “Install to”, touch “Machine HDD” and touch “Next”.
13. When you see “Ready to Install”, check the information on the screen to confirm your previous selection.
14. Touch “OK”. You will see “Installing the extended feature… Please wait.” and then “Completed”.
15. Touch “Exit” to go back to the setting screen.
16. Touch “Change Allocation”.
17. Touch “Browser” line.
18. Press one of the hard keys, which you want to use for the Browser Unit. By default, this function is assigned to the “Other Functions” key (bottom key of the function keys).
19. Touch “OK”.
20. Touch “Exit” twice to go back to the copy screen.
21. Turn off the main power switch.
22. Install the function key for “Browser Unit” to the place you chose in step 18.
23. Turn on the main power switch.
24. When the reaches the Ready condition, press the key that you installed in step 22.
    Note: A message will be displayed confirming that the Browser Option was successfully installed.
25. Turn off the main power switch.
26. Remove the SD card from slot 2.
27. Reinstall the JAVA card in slot 2.
28. Attach the slot cover.
29. Ask the customer to keep the SD card in a safe place after you have installed the application program from the card to the HDD. This is because:

    - The SD card is the only proof that the user is licensed to use the application program.
    - You may need to check the SD card and its data to solve a problem in the future.

## *Update Procedure*

1. Remove the slot cover [A] for the SD cards (☞ x 1).
2. Turn the SD-card label face to the rear of the machine. Then push it slowly into slot 2 until you hear a click.
3. Plug in and turn on the main power switch.

4. Push the "User Tools" key.
   - If an administrator setting is registered for the machine, step 5 and 6 are required. Otherwise, skip to the step 7
5. Push the "Login/ Logout" key.
6. Login with the administrator user name and password.
7. Touch "Extended Feature Settings" twice on the LCD.
8. Touch "Uninstall" on the LCD.
9. Touch the "Browser" line
10. Confirmation message appears on the LCD.
11. Touch "Yes" to proceed.
12. Reconfirmation message appears on the LCD.
13. Touch "Yes" to uninstall the browser unit.
14. You will see "Uninstalling the extended feature... Please wait.", and then "Completed".
15. Touch "Exit" to go back to the setting screen.
16. Exit "User/Tools" setting, and then turn off the main power switch.
17. Remove the SD card from SD card slot 2.
18. Overwrite the updated program in the "sdk" folder of the browser unit application with PC.
19. Do the "Installation Procedure" to install the browser unit.

## 2.26.13 GIGABIT ETHERNET

**⚠CAUTION**

- Unplug the main machine power cord before you do the following procedure.

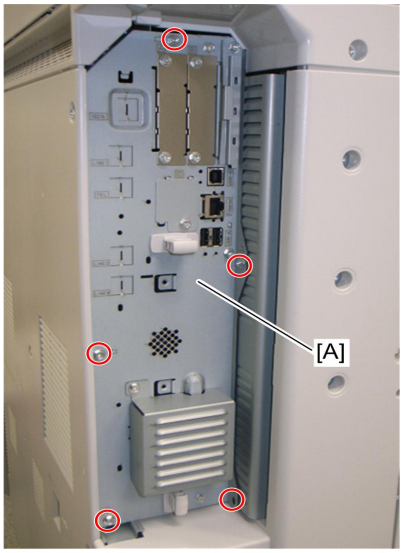


d027i075

1. Pull out the controller board [A] (🔩 x 5).

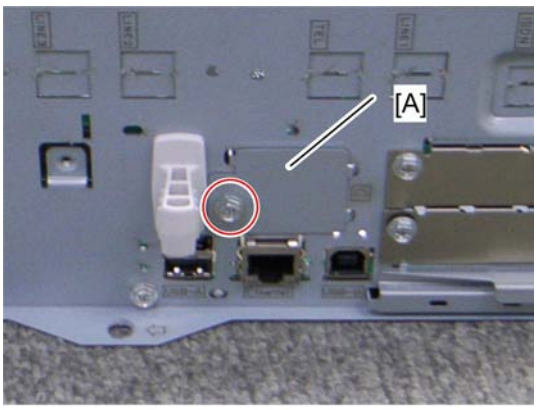


d027i409

2. Remove the slot cover [A] (🖉 x 1).

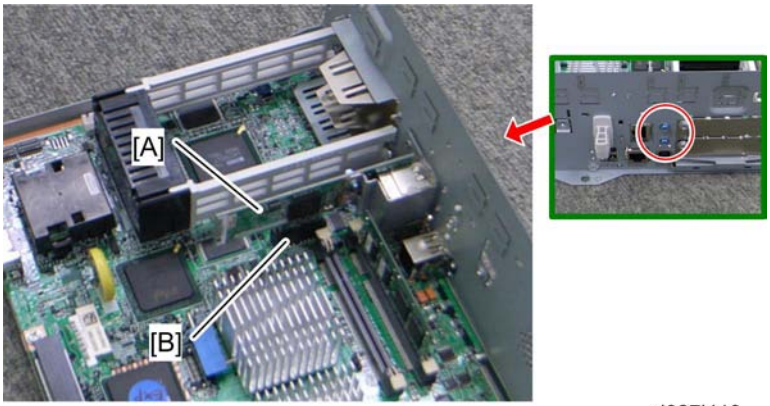


d027i410

3. Attach the Gigabit Ethernet controller [A] into the slot [B] (🖉 x 2).

## 2.26.14 CHECK ALL CONNECTIONS

1. Plug in the power cord. Then turn on the main switch.
2. Enter the printer user mode. Then print the configuration page.
   User Tools > Printer Settings > List Test Print > Config. Page

All installed options are shown in the “System Reference” column.

# PREVENTIVE MAINTENANCE

| SECTION 3 PREVENTIVE MAINTENANCE REVISION HISTORY | | |
|---|---|---|
| **Page** | **Date** | **Added/Updated/New** |
| | | None |

# 3. PREVENTIVE MAINTENANCE

## 3.1 MAINTENANCE TABLES

See "Appendices" for the following information:

- Preventive Maintenance Items
- Other Yield Parts

## 3.2 PM PARTS SETTINGS

### 3.2.1 BEFORE REMOVING THE OLD PM PARTS

1. Enter the SP mode.
2. Output the SMC logging data with SP5-990-004.
3. Set the following SPs to "1" before you turn the power off. Then, the machine will reset the PM counters automatically. In the case of developer, the developer initialization will also be done automatically.
4. Exit the SP mode.

| Item | SP |
|---|---|
| Developer | Black: 3902-005<br>Yellow: 3902-006<br>Cyan: 3902-007<br>Magenta: 3902-008 |
| Drum Unit | Black: 3902-009<br>Yellow: 3902-010<br>Cyan: 3902-011<br>Magenta: 3902-012 |
| Fusing Unit Parts (not necessary for complete fusing units; see below) | 3902-014 |
| Image Transfer Belt Cleaning Unit | 3902-015 |
| Paper Transfer Unit | 3902-016 |
| Toner Collection Bottle (if not full or near-full) | 3902-017 |

For the following units, there is a new unit detection mechanism. It is not necessary to reset PM counters.

- PCU
- Development unit
- Complete fusing unit
- Toner Collection Bottle (if full or near-full)

### 3.2.2 AFTER INSTALLING THE NEW PM PARTS

1. Turn on the main power switch.
2. Output the SMC logging data with SP5-990-004 and check the counter values.
3. Make sure that the PM counters for the replaced units are “0” with SP7-803. If the PM counter for a unit was not reset, then reset that counter with SP 7-804.
4. Make sure that the exchange counter counts up with SP7-853.
5. Make sure that the counters for the previous units (SP7-906) on the new SMC logging data list (from step 2 above) are equal to the counters (SP7-803) for these units on the previous SMC logging data list (the list that was output in the “Before removing the old parts” section).
6. Make sure that the unit replacement date is updated with SP7-950.

### 3.2.3 PREPARATION BEFORE OPERATION CHECK

1. Clean the exposure glasses (for DF and book scanning).
2. Enter the user tools mode.
3. Do the “Automatic Color Calibration “(ACC) for the copier mode & printer mode as follows:
   - Print the ACC test pattern (User Tools > Maintenance > ACC > Start).
   - Put the printout on the exposure glass.
   - Put 10 sheets of white paper on the test chart. This ensures the precise ACC adjustment.
   - Close the ARDF or the platen cover.
   - Press “Start Scanning” on the LCD. Then, the machine starts the ACC.
4. Exit the User Tools mode, and then enter the SP mode.
5. Do the “Forced line position adjustment” as follows.
   - First do SP2-111-3 (Mode c).
   - Then do SP2-111-1 (Mode a).
   - To check if SP 2-111-1 was successful, watch the screen during the process. A message is displayed at the end. Also, you can check the result with SP 2-194-10 to -12.
6. Exit the SP mode.

### 3.2.4 OPERATION CHECK

Check if the sample image has been copied normally.

# REPLACEMENT & ADJUSTMENT

| SECTION 4 REPLACEMENT AND ADJUSTMENT REVISION HISTORY | | |
|---|---|---|
| **Page** | **Date** | **Added/Updated/New** |
| | | None |

# 4. REPLACEMENT AND ADJUSTMENT

## 4.1 BEFOREHAND

**CAUTION**

- Before installing options, please do the following:
- If there is a fax unit in the machine, print out all messages stored in the memory, the lists of user-programmed items, and the system parameter list.
- If there are printer jobs in the machine, print out all jobs in the printer buffer.
- Turn off the main switch and disconnect the power cord, the telephone line, and the network cable.

## 4.2 SPECIAL TOOLS

| Part Number | Description | Q'ty |
|---|---|---|
| B645 5010 | SD Card | 1 |
| B645 6705 | PCMCIA Card Adapter | 1 |
| B645 6820 | USB Reader/Writer | 1 |
| VSSM9000 | Digital Multimeter – FLUKE87 | 1 |
| G021 9350 | Loop-back Connector – Parallel ***NOTE** | 1 |
| C401 9503 | 20X Magnification Scope | 1 |
| A257 9300 | Grease Barrierta – S552R | 1 |
| 5203 9502 | Silicone Grease G-501 | 1 |
| A092 9503 | C4 Color Test Chart (3 pcs/set) | 1 |
| A184 9501 | Optics Adjustment Tool (2 pcs/set) | 2 |
| B679 5100 | Plug - IEEE1284 Type A | 1 |
| B132 9700 | Lubricant Powder | 1 |

Note

- The "Loop-back Connector–Parallel" requires the "Plug-IEEE1284 Type A", and the optional IEEE1284 interface option must also be installed.

# 4.3 IMAGE ADJUSTMENT

## 4.3.1 SCANNING

Check the printing registration/side-to-side adjustment and the blank margin adjustment before you do the following scanner adjustments.

Note

- Use S-2-1 test chart to do the following adjustments.

### *Scanner sub-scan magnification*

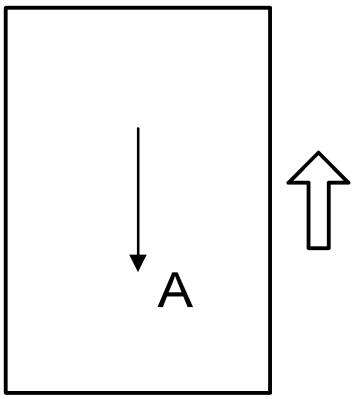


A: Sub-scan magnification

1. Put the test chart on the exposure glass. Then make a copy from one of the feed stations.
2. Check the magnification ratio. Adjust with SP4-008 if necessary.
   Standard: ±1.0%.

### *Scanner leading edge and side-to-side registration*

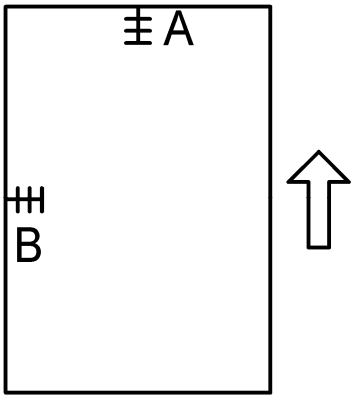

Image Adjustment

A: Leading Edge Registration

1. Put the test chart on the exposure glass. Then make a copy from one of the feed stations.
2. Check the leading edge and side-to-side registration. Adjust the following SP modes if necessary.
   Standard: 0 ± 2mm for the leading edge registration, 0 ± 2.5mm for the side-to-side registration.

| | **SP mode** |
|---|---|
| Leading Edge Registration | SP4-010-001 |
| Side-to-Side Registration | SP4-011-001 |

## 4.3.2 ARDF

### *ARDF side-to-side, leading edge registration and trailing edge*

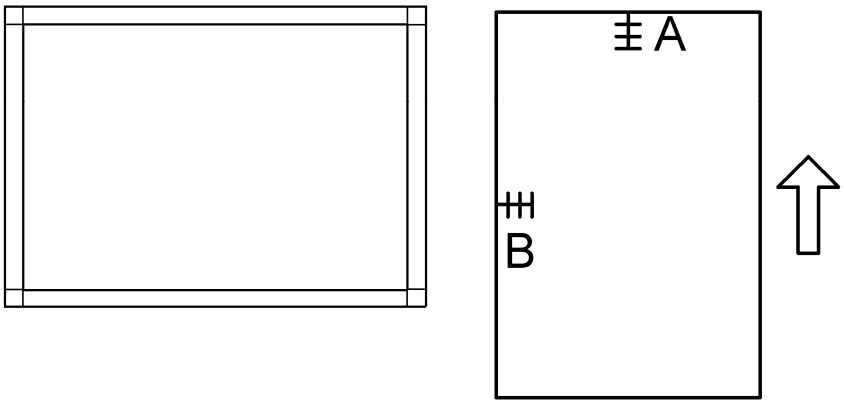


A: Leading edge registration

Use A3/DLT paper to make a temporary test chart as shown above.

1. Put the temporary test chart on the ARDF. Then make a copy from one of the feed stations.
2. Check the registration. Check the leading edge and side-to-side registration. Adjust the following SP modes if necessary.
   Standard: 4.2 ± 2 mm for the leading edge registration, 2 ± 1 mm for the side-to-side registration. Use the following SP modes to adjust if necessary.

| SP Code | What It Does | Adjustment Range |
|---|---|---|
| SP6-006-001 | Side-to-Side Registration | ± 3.0 mm |
| SP6-006-003 | Leading Edge Registration | ± 5.0 mm |
| SP6-006-005 | Buckle: Duplex Front | ± 3.0 mm |
| SP6-006-006 | Buckle: Duplex Rear | ± 2.5 mm |
| SP6-006-007 | Rear Edge Erase (Trailing Edge) | ± 10.0 mm |

### *ARDF sub-scan magnification*

1. Put the temporary test chart on the ARDF. Then make a copy from one of the feed stations.
2. Check the magnification ratio. Adjust with SP6-017-001 if necessary.
   - Standard: ±1.0%
   - Reduction mode: ±1.0%
   - Enlargement mode: ±1.0%

## 4.3.3 REGISTRATION

### *Image Area*

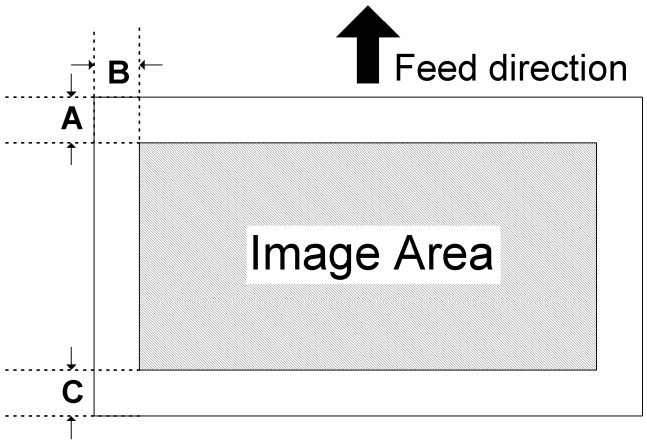


A = C = 5.2 mm (0.2"), B = 2.0 mm

Make sure that the registration is adjusted within the adjustment standard range as shown below.

### *Leading Edge*

Adjusts the leading edge registration for each paper type and process line speed.

### *Side to Side*

Adjusts the side-to-side registration for each paper feed station. Use SP mode (SP1-002) to adjust the side-to-side registration for the optional paper feed unit, LCT, and duplex unit.

### *Adjustment Standard*

- Leading edge (sub-scan direction): 5.2 ± 2 mm
- Side to side (main-scan direction): 2 ± 1 mm

### *Paper Registration Standard*

The registration in both main- and sub-scan directions can change within the following tolerance.

- Sub-scan direction: 0 ± 9 mm
- Main-scan direction: 0 ± 4 mm

### *Adjustment Procedure*

1. Enter SP2-109-003.

2. Print out the test pattern (14: 1-dot trimming pattern) with SP2-109-003.

Note

- Registration can change slightly as shown on the previous page. Print some pages of the 1-dot trimming pattern for step 3 and 4. Then average the leading edge and side-to-side registration values, and adjust each SP mode.

3. Do the leading edge registration adjustment.
   1) Check the leading edge registration and adjust it with SP1-001.
   2) Select the adjustment conditions (paper type and process line speed).
   3) Input the value. Then press the # key.
   4) Generate a trim pattern to check the leading edge adjustment.
4. Do the side-to-side registration adjustment.
   1) Check the side-to-side registration and adjust it with SP1-002.
   2) Select the adjustment conditions (paper feed station).
   3) Input the value. Then press the # key.
   4) Generate a trim pattern to check the leading edge adjustment.

## 4.3.4 ERASE MARGIN ADJUSTMENT

Note

- Adjust the erase margin C and D only if the registration (main scan and sub scan) cannot be adjusted within the standard values. Do the registration adjustment after adjusting the erase margin C and D, and then adjust the erase margin A and B.

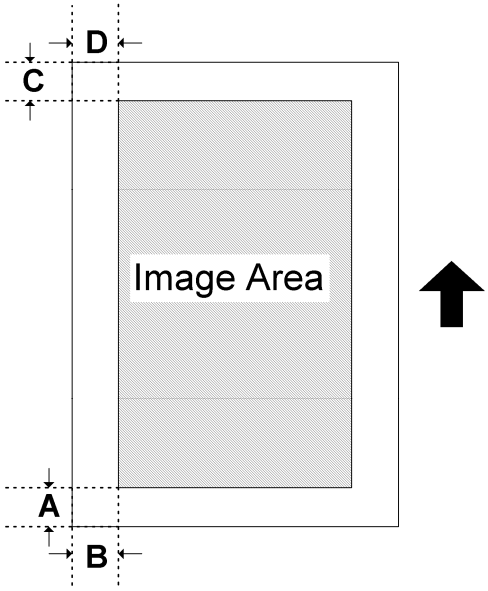


1. Enter SP2-109-003.
2. Print out the test pattern (14: 1-dot trimming pattern) with SP2-109-003.
3. Check the erase margin A and B. Adjust them with SP2-103-001 to -010 if necessary.
   - Leading edge: 1.5 to 5.0 mm,
   - Side-to-side: 0.5 to 4.0 mm,
   - Trailing edge: 0.5 to 0.6 mm

## 4.3.5 COLOR REGISTRATION

### *Line Position Adjustment*

The automatic line position adjustment usually is done for a specified condition to get the best color prints.

Do the following if color registration shifts:

- Do “Auto Color Registration” as follows to do the forced line position adjustment.
  1. First do SP2-111-3.
  2. Then do SP2-111-1.

     To check if SP 2-111-1 was successful, watch the screen during the process. A message is displayed at the end. Also, you can check the result with SP 2-194-10 to -12.
- You should also do the line position adjustment at these times:
  - After you transport or move the machine (you should do the forced line position adjustment if you install the machine at the user location.) if the machine is pre-installed at the workshop and moved to the user location,
  - When you open the drum positioning plate
  - When you remove or replace the motors, clutches, and/or gears related to the drum/development/transfer sections
  - When you remove or replace the image transfer belt, image transfer belt unit or laser optical housing unit

## 4.3.6 PRINTER GAMMA CORRECTION

Note

- The ACC is usually sufficient to adjust the color balance to get the best print output. You only need the printer gamma correction to fine-tune to meet user requirements.

Use SP modes if you want to modify the printer gamma curve created with ACC. You can adjust the gamma data for the following:

- Highlight
- Middle
- Shadow areas
- IDmax.

The adjustable range is from 0 to 30 (31 steps).

### *Copy Mode*

**- KCMY Color Balance Adjustment -**

The adjustment uses only “Offset” values.

Note

- Never change “Option” values (default value is 0).

| | |
|---|---|
| Highlight (Low ID) | Levels 2 through 5 in the C4 chart 10-level scale |
| Middle (Middle ID) | Levels 3 through 7 in the C4 chart 10-level scale |
| Shadow (High ID) | Levels 6 through 9 in the C4 chart 10-level scale |
| ID max | Level 10 in the C4 chart 10-level scale (affects the entire image density.) |
| Offset | The higher the number in the range associated with the low ID, middle ID, high ID, and ID max, the greater the density. |

There are four adjustable modes (can be adjusted with SP4-918-009):

- Copy Photo mode
- Copy Letter mode
- Copy Letter (Single Color) mode
- Copy Photo (Single Color) mode

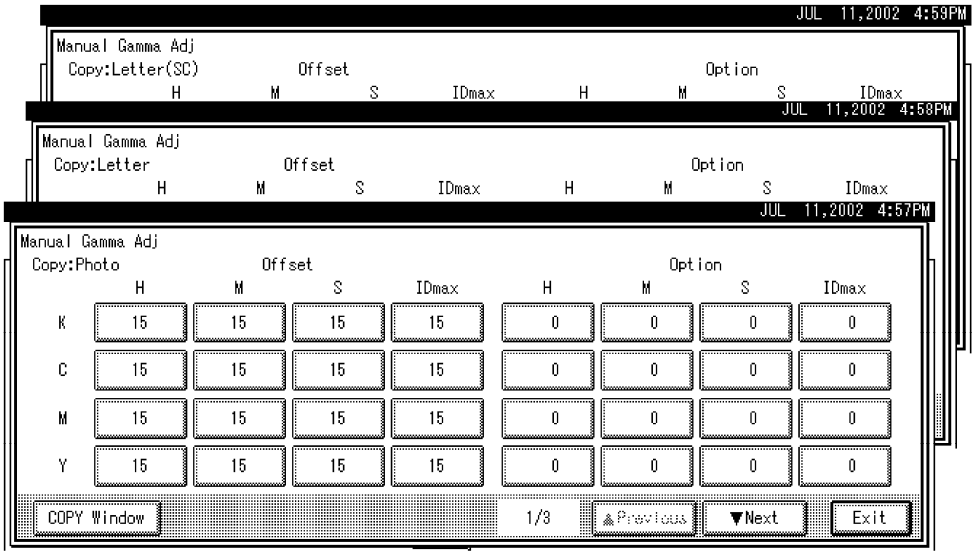


**- Adjustment Procedure -**

1. Copy the C-4 chart in the mode that you want to adjust.
2. Enter the SP mode.
3. Select “Copy SP.”
4. Select SP4-918-009.
5. Adjust the offset values until the copy quality conforms to the standard (* the table below).

Note

- 1. Never change “Option” value (default value is "0").
- 2. Adjust the density in this order: “ID Max,” “Middle,” “Shadow,” “Highlight.”

**- Photo Mode, Full Color -**

| | Item to Adjust | Level on the C-4 chart | Adjustment Standard |
|---|---|---|---|
| 1 | ID max:<br>(K, C, M, and Y) | 1 2 3 4 5 6 7 8 9 10 ⬆ | Adjust the offset value so that the density of level 10 matches that of level 10 on the C-4 chart. |
| 2 | Middle (Middle ID)<br>(K, C, M, and Y) | 1 2 3 4 5 6 7 8 9 10 ⬆ | Adjust the offset value so that the density of level 6 matches that of level 6 on the C-4 chart. |

Image Adjustment

| | | | |
|---|---|---|---|
| 3 | Shadow (High ID) (K, C, M, and Y) | 1 2 3 4 5 6 7 8 9 10 | Adjust the offset value so that the density of level 8 matches that of level 8 on the C-4 chart. |
| 4 | Highlight (Low ID) (K, C, M, and Y) | 1 2 3 4 5 6 7 8 9 10 | Adjust the offset value so that dirty background does not show on the copy and the density of level 3 is slightly lighter than that of level 3 on the C-4 chart. |
| 5 | K Highlight (Low ID) (C,M, and Y) <on the full color copy> | 1 2 3 4 5 6 7 8 9 10 | Adjust the offset value so that the color balance of black scale levels 3 through 5 in the copy is seen as gray (no C, M, or Y should be visible). If the black scale contains C, M, or Y, do steps 1 to 4 again. |

**- Photo Mode, Single Color -**

| | Item to Adjust | Level on the C-4 chart | Adjustment Standard |
|---|---|---|---|
| 1 | ID max: (K) | 1 2 3 4 5 6 7 8 9 10 | Adjust the offset value so that the density of level 10 matches that of level 10 on the C-4 chart. |
| 2 | Middle (Middle ID) (K) | 1 2 3 4 5 6 7 8 9 10 | Adjust the offset value so that the density of level 6 matches that of level 6 on the C-4 chart. |
| 3 | Shadow (High ID) (K) | 1 2 3 4 5 6 7 8 9 10 | Adjust the offset value so that the density of level 8 |

| | | | |
|---|---|---|---|
| | | | matches that of level 8 on the C-4 chart. |
| 4 | Highlight (Low ID) (K) | 1 2 3 4 5 6 7 8 9 10 | Adjust the offset value so that dirty background does not show on the copy and the density of level 3 is slightly lighter than that of level 3 on the C-4 chart. |

**- Text (Letter) Mode, Full Color -**

| | Item to Adjust | Level on the C-4 chart (K) | Adjustment Standard |
|---|---|---|---|
| 1 | ID max: (K, C, M, and Y) | 1 2 3 4 5 6 7 8 9 10 | Adjust the offset value so that the density of level 10 matches that of level 10 on the C-4 chart. |
| 2 | Middle (Middle ID) (K, C, M, and Y) | 1 2 3 4 5 6 7 8 9 10 | Adjust the offset value so that the density of level 6 matches that of level 6 on the C-4 chart. |
| 3 | Shadow (High ID) (K, C, M, and Y) | 1 2 3 4 5 6 7 8 9 10 | Adjust the offset value so that the density of level 8 matches that of level 8 on the C-4 chart. |
| 4 | Highlight (Low ID) (K, C, M, and Y) | 1 2 3 4 5 6 7 8 9 10 | Adjust the offset value so that dirty background does not show on the copy and the density of level 3 is slightly lighter than that of level 3 on the C-4 chart. |

**- Text (Letter) Mode, Single Color -**

| | Item to Adjust | Level on the C-4 chart (K) | Adjustment Standard |
|---|---|---|---|
| 1 | ID max: (K) | 1 2 3 4 5 6 7 8 9 10 | Adjust the offset value so that the density of level 10 matches that of level 10 on the C-4 chart. |
| 2 | Middle (Middle ID) (K) | 1 2 3 4 5 6 7 8 9 10 | Adjust the offset value so that the density of level 6 matches that of level 6 on the C-4 chart. |
| 3 | Shadow (High ID) (K) | 1 2 3 4 5 6 7 8 9 10 | Adjust the offset value so that the density of level 8 matches that of level 8 on the C-4 chart. |
| 4 | Highlight (Low ID) (K) | 1 2 3 4 5 6 7 8 9 10 | Adjust the offset value so that dirty background does not show on the copy and the density of level 3 is slightly lighter than that of level 3 on the C-4 chart. |

Note

- Text parts of the test pattern cannot be printed clearly after you adjust “shadow” as shown above. At this time, check if the 5 line/mm pattern at each corner is printed clearly. If it is not, adjust the offset value of “shadow” again until it is.

## *Printer Mode*

There are six adjustable modes (select these modes with printer SP1-102-001):

- 1200 x 1200 photo mode
- 1200 x 1200 text mode
- 2400 x 600 photo mode
- 2400 x 600 text mode
- 1800 x 600 photo mode
- 1800 x 600 text mode

- 600 x 600 photo mode
- 600 x 600 text mode

| | K | C | M | Y |
|---|---|---|---|---|
| Highlight | SP1-104-1 | SP1-104-21 | SP1-104-41 | SP1-104-61 |
| Shadow | SP1-104-2 | SP1-104-22 | SP1-104-42 | SP1-104-62 |
| Middle | SP1-104-3 | SP1-104-23 | SP1-104-43 | SP1-104-63 |
| IDmax | SP1-104-4 | SP1-104-24 | SP1-104-44 | SP1-104-64 |

**- Adjustment Procedure -**

1. Do ACC for the printer mode.
2. Turn the main power off and on.
3. Enter SP mode.
4. Select “Printer SP”.
5. Select SP1-102-001. Then select the necessary print mode to adjust.
6. Choose SP1-103-1 to print out a tone control test sheet if you want to examine the image quality for these settings.
7. Adjust the color density with SP1-104. Compare the tone control test sheet with the C4 test chart.

   Note

   - Adjust the density in this order: “ID Max”, “Shadow”, “Middle”, “Highlight”.
8. Use SP1-105-001 to keep the adjusted settings.

# 4.4 EXTERIOR COVERS

## 4.4.1 FRONT DOOR

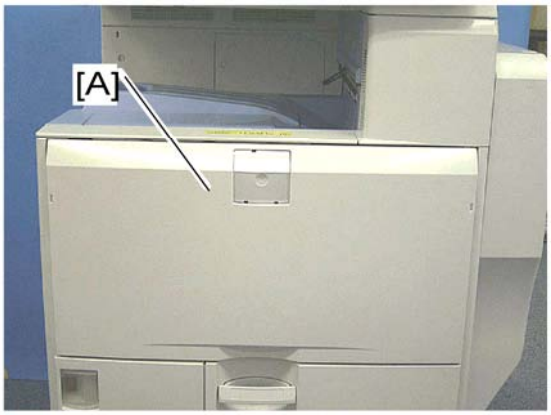


1. Open the front door [A].

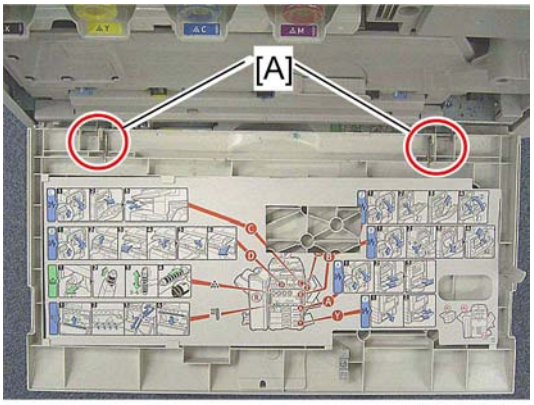


d027r513

2. Remove the two pins [B], and then remove the front cover.

## 4.4.2 LEFT COVER

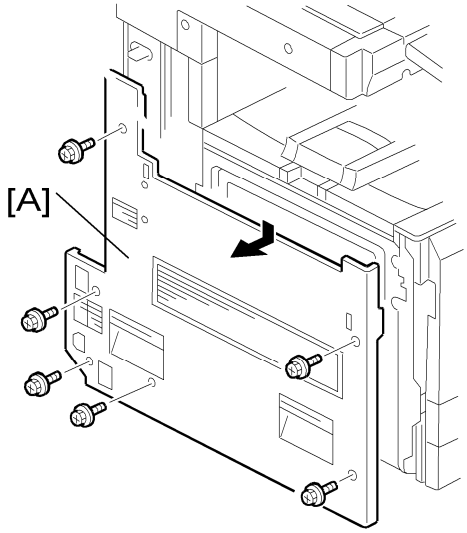


1. Left cover [A] (🔩 x 6)

## 4.4.3 REAR COVER

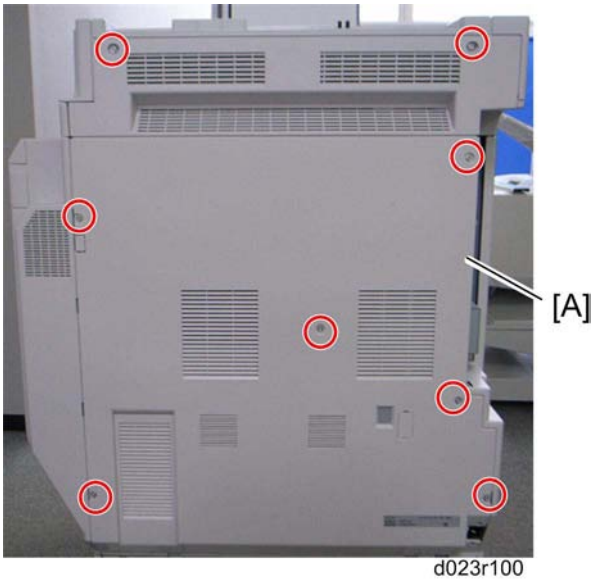


d023r100

1. Rear cover [A] (🔩 x 8)

## 4.4.4 RIGHT REAR COVER

1. Rear cover (☛ p.4-15 "Rear Cover")

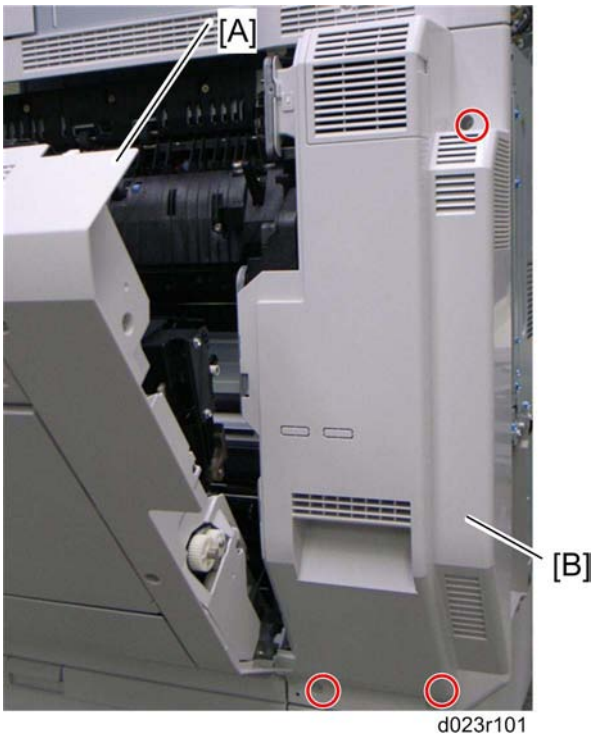


2. Open the right door [A].
3. Right rear cover [B] (🖉 x 3)

## 4.4.5 OPERATION PANEL

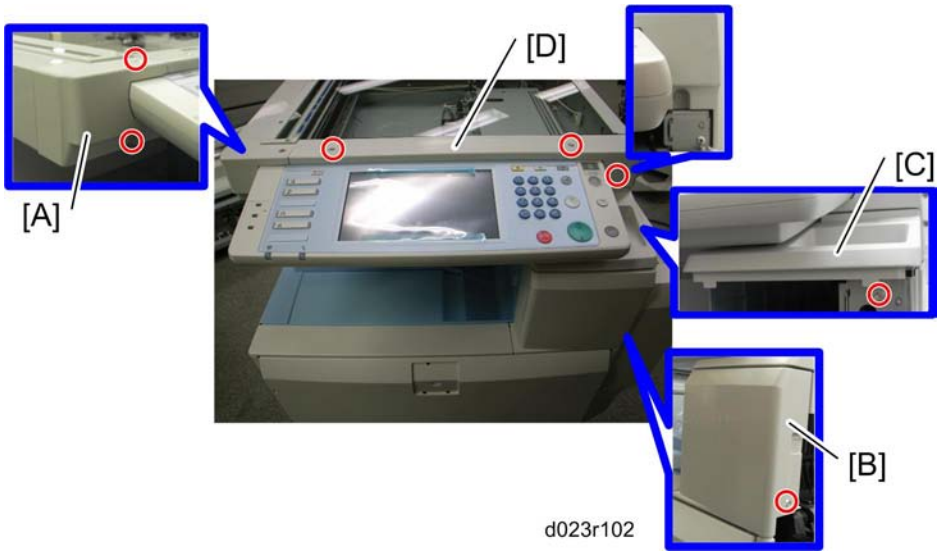


1. Top left front cover [A] (🔩 x 2)
2. Open the right door.
3. Front right cover [B] (🔩 x 1)
4. Clip table cover [C] (🔩 x 1)
5. Top front cover [D] (🔩 x 3)

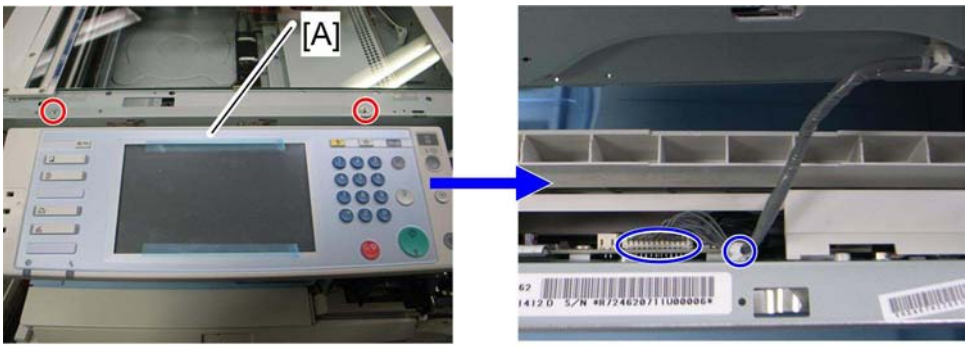


6. Operation panel [A] (🔩 x 2, 🔌 x 1, 🔌 x 1)

## 4.4.6 PAPER EXIT COVER

1. Front right cover (☛p.4-16 "Operation Panel")

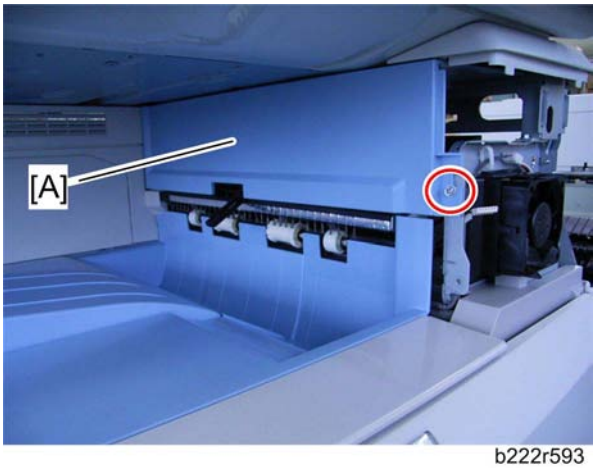


b222r593

2. Paper exit cover [A] (🖉 x 1)

## 4.4.7 INNER TRAY

1. Image transfer belt unit (☛p.4-55 "Image Transfer Belt Unit")
2. Paper exit cover (☛ p.4-17 "Paper Exit Cover")
3. Left cover (☛ p.4-15 "Left Cover")

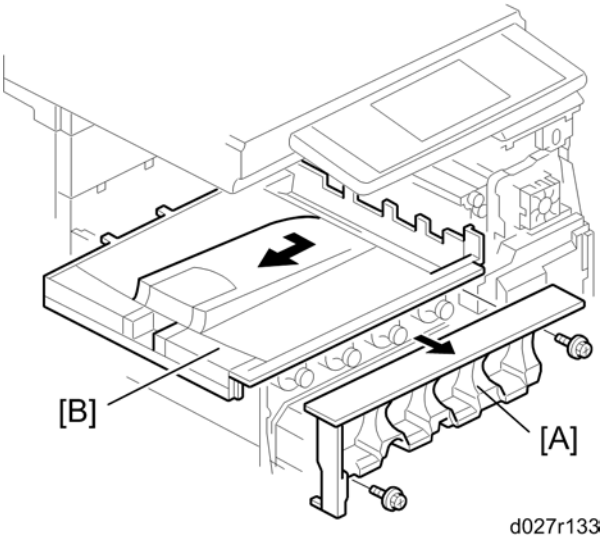


d027r133

4. Toner cartridge cover [A] (🖉 x 2)
5. Inner tray [B]

## 4.4.8 DUST FILTER

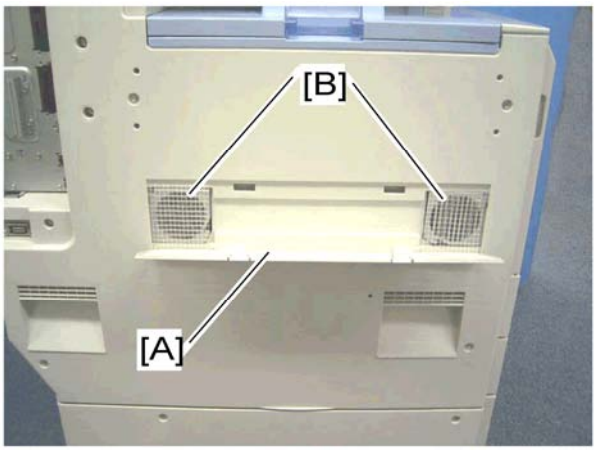


1. Dust filter cover [A]
2. Two dust filters [B]

## 4.4.9 OZONE FILTER

### *Ozone filters for the scanner unit*

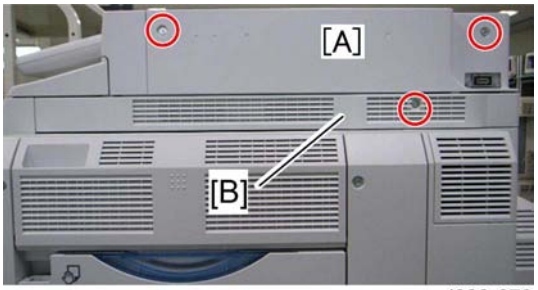

d023r670

1. Scanner right cover [A] (🖉 x 2)
2. Right top cover [B] (🖉 x 1)

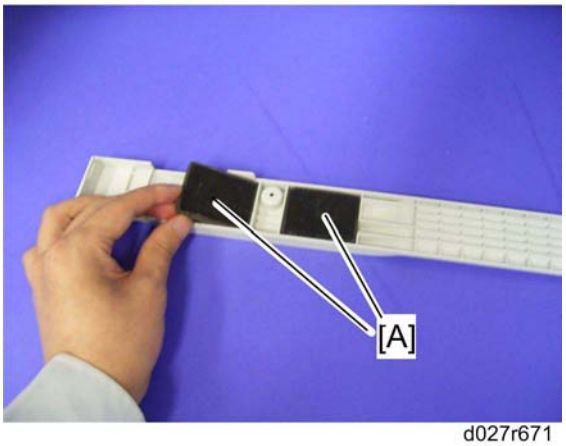

d027r671

3. Ozone filters [A] in the right top cover.

# 4.5 SCANNER UNIT

## 4.5.1 EXPOSURE GLASS

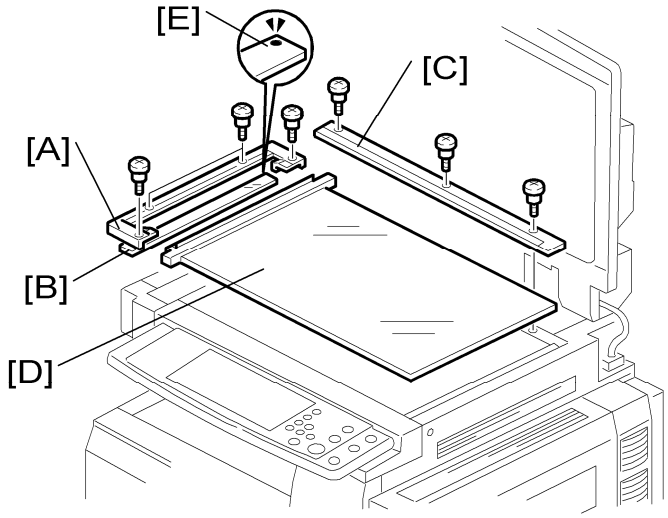


1. Glass cover [A] (🖉 x 4)
2. ARDF exposure glass [B]
3. Rear scale [C] (🖉 x 3)
4. Exposure glass with left scale [D]

Note

- Position the white marker [E] at the rear-left corner and the black or blue marker at the front-left corner when you reattach the ARDF exposure glass.

## 4.5.2 ORIGINAL LENGTH/WIDTH SENSORS

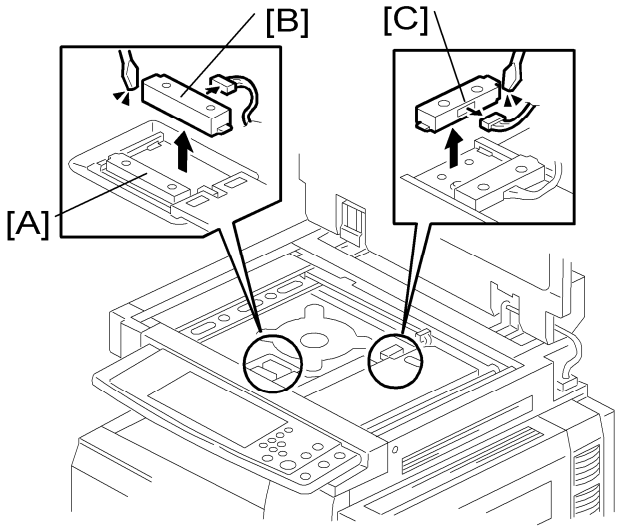


1. Exposure glass with left scale (☛ p.4-20 "Exposure Glass")
2. Original length sensor bracket [A] (x 1, x1)
3. Original length sensors [B] (snap, x 1 each)
4. The number of the original length sensors depends on the model; 3 for EU, 2 for others.
5. Original width sensors [C] (snap, x 1, x1 each)

## 4.5.3 EXPOSURE LAMP

1. Rear cover (☛ p.4-15 "Rear Cover")
2. Operation panel (☛ p.4-16 "Operation Panel")
3. Exposure glass (☛ p.4-20 "Exposure Glass")

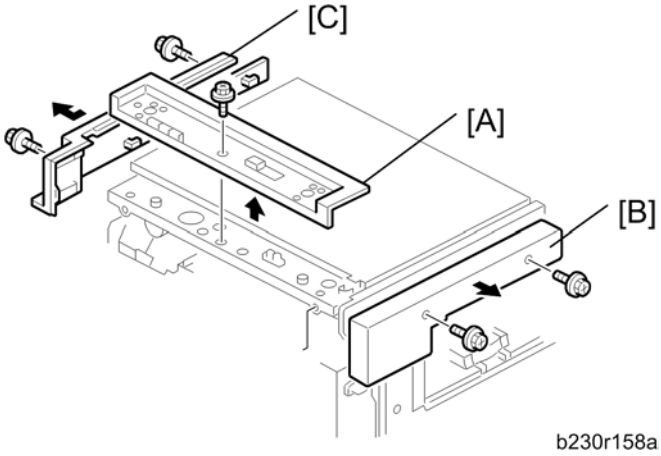


4. Scanner rear cover [A] (🖉 x 1)
5. Scanner left cover [B] (🖉 x 2)
6. Scanner right cover [C] (🖉 x 2)

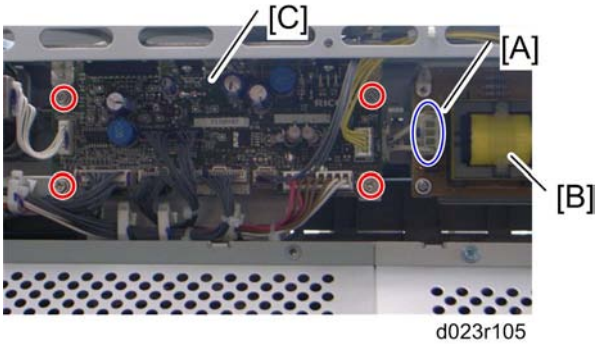


7. Disconnect the connector [A] from the lamp stabilizer [B].
8. SIO [C] (🖉 x 4, ✋ x All)

Scanner Unit

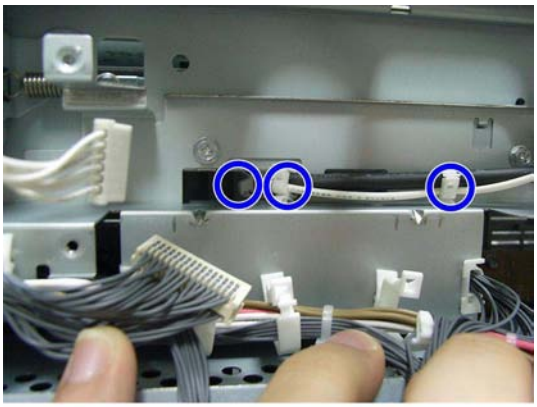

d023r106

9. Release three clamps.

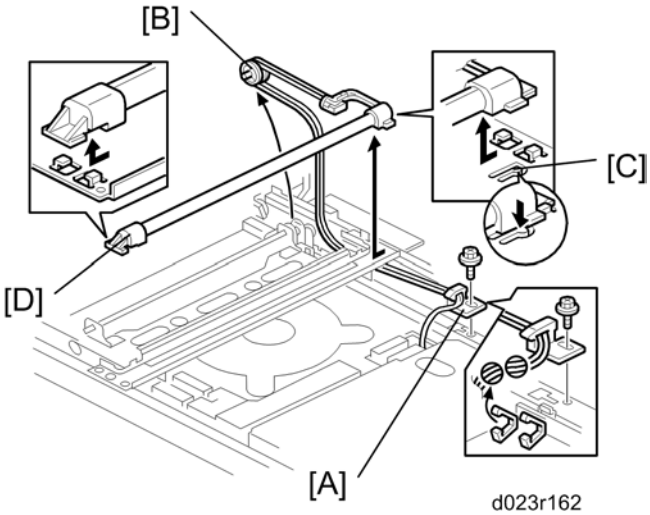


d023r162

10. Release the clamp [A] (🔩 x 1).
11. Remove the pulley [B].
12. Hold down the snap [C], and then slide the exposure lamp [D] to the front side.
13. Exposure lamp [D]

## *Reassembling*

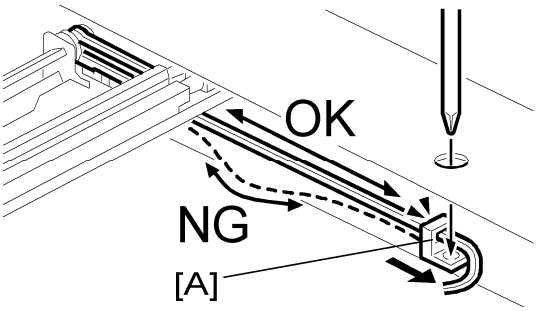


Run the cable so there is no slack. Slide the clamp [A] to adjust the cable slack.

## 4.5.4 SCANNER MOTOR

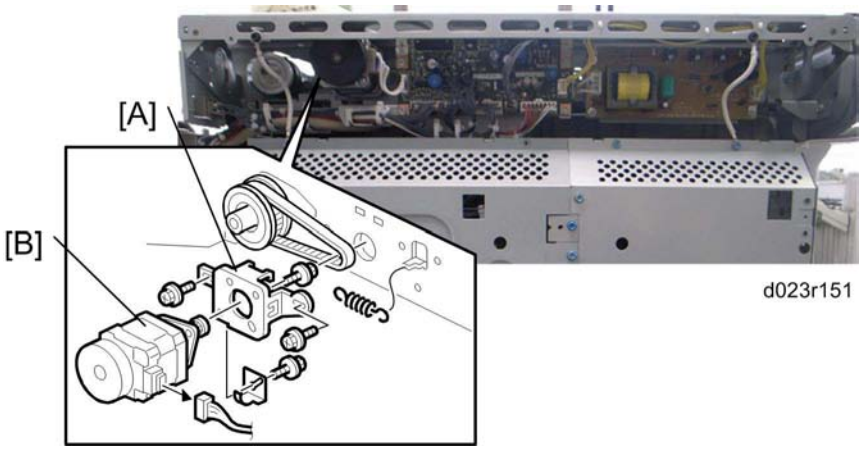


1. Rear cover (☛ p.4-15 "Rear Cover")
2. Scanner motor assembly [A] (🔩 x 2, spring x 1)
3. Scanner motor [B] (🔩 x 2, 🔌 x 1,)

## 4.5.5 SENSOR BOARD UNIT (SBU)

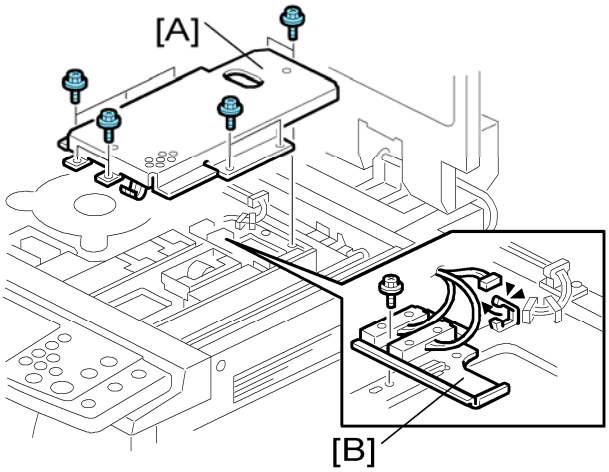


1. Exposure glass (☛ p.4-20 "Exposure Glass")
2. SBU cover bracket [A] (🔩 x 9)
3. Original length sensor bracket [B] (🔩 x 1, 🔧 x 1)

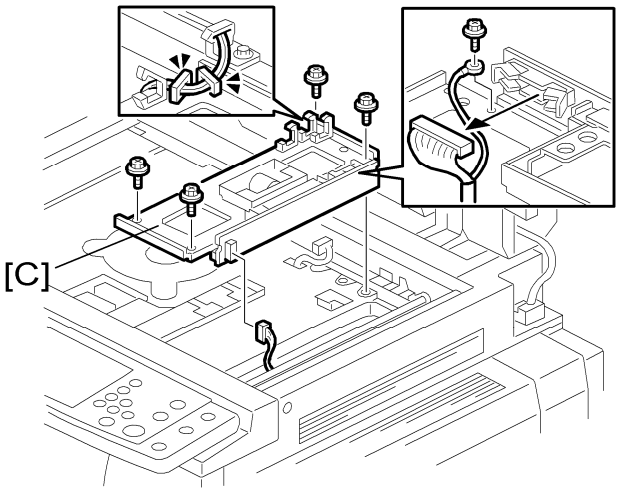


4. Sensor board unit [C] (🔩 x 4, Grand screw x 1, 🔩 x 2, 🔧 x 2)

### *When reassembling*

Adjust the following SP modes after you replace the sensor board unit:

- SP4–008 (Sub Scan Mag): See "Image Adjustment: Scanning".
- SP4–010 (Sub Mag Reg.): See "Image Adjustment: Scanning".
- SP4–011 (Main Scan Reg): See "Image Adjustment: Scanning".
- SP4–688 (DF: Density Adjustment): Use this to adjust the density level if the ID of outputs made in the DF and Platen mode is different.

## 4.5.6 EXPOSURE LAMP STABILIZER

1. Rear cover (☛ p.4-15 "Rear Cover")

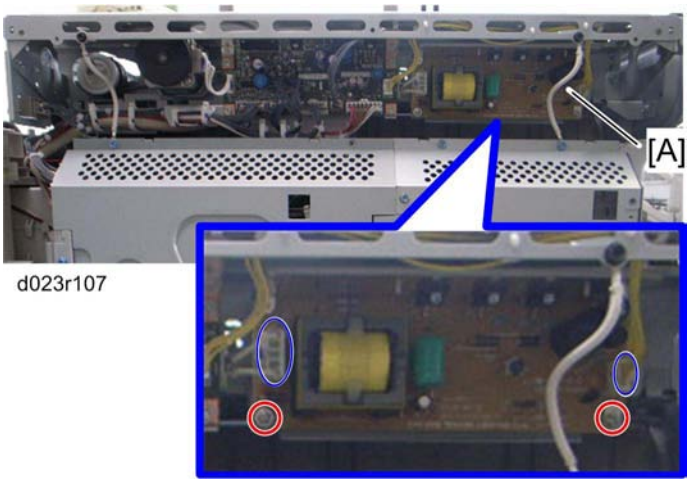


d023r107

2. Exposure lamp stabilizer [A] (🖉 x 2, 🖐 x 2)

## 4.5.7 SIO (SCANNER IN/OUT) BOARD

1. Rear cover (☛ p.4-15 "Rear Cover")

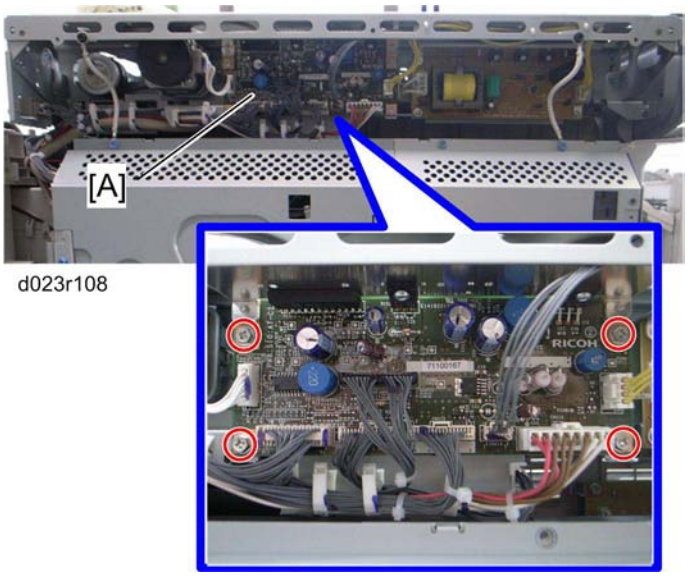


d023r108

2. SIO [A] (🖉 x 4, 🖐 x All)

## 4.5.8 SCANNER HP SENSOR

1. Scanner left cover and scanner rear cover (☛p.4-21 "Exposure Lamp")
2. Exposure glass (☛ p.4-20 "Exposure Glass")

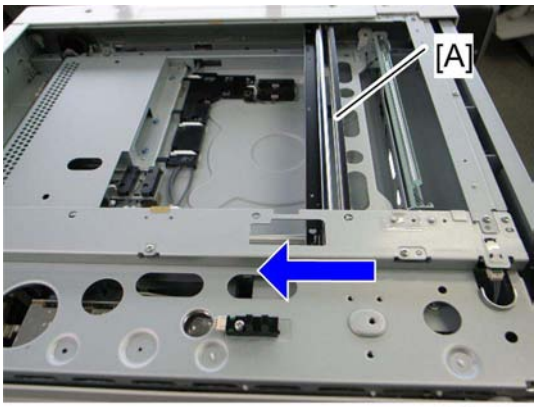


d023r111

3. Move the 1st scanner carriage [A] to the right side.

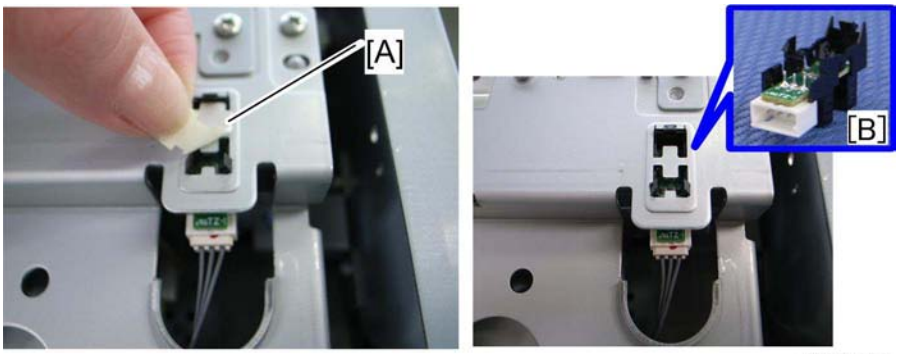


d023r112

4. Remove the mylar [A]
5. Remove the scanner HP sensor [B] (☶ x 1, three snaps)

## 4.5.9 PLATEN COVER SENSOR

1. Scanner left cover and scanner rear cover (☛ p.4-21 "Exposure Lamp")

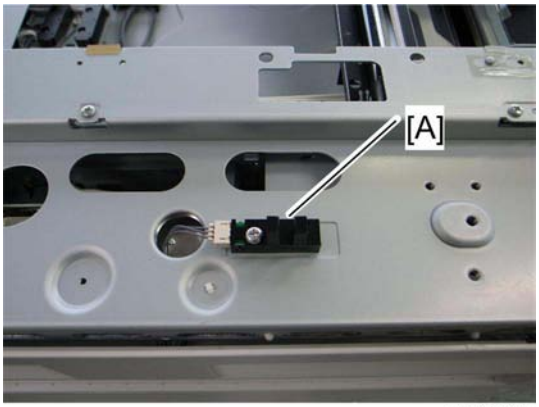


d023r113

2. Platen cover sensor [A] (🖉 x 1, 🖗 x 1)

## 4.5.10 FRONT SCANNER WIRE

1. Exposure glass (☛ p.4-20 "Exposure Glass")

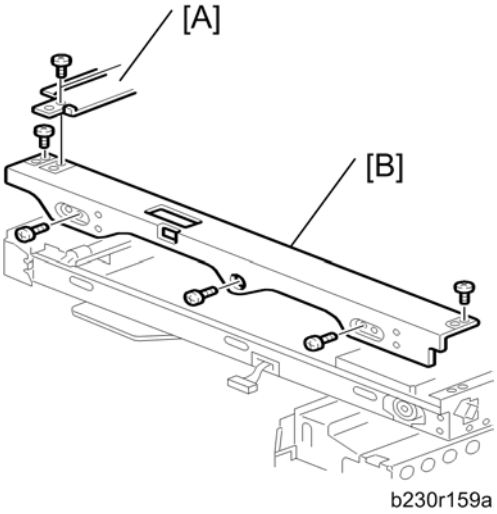


2. Scanner left stay [A] (☞ x 3)
3. Front frame [B] (☞ x 5)

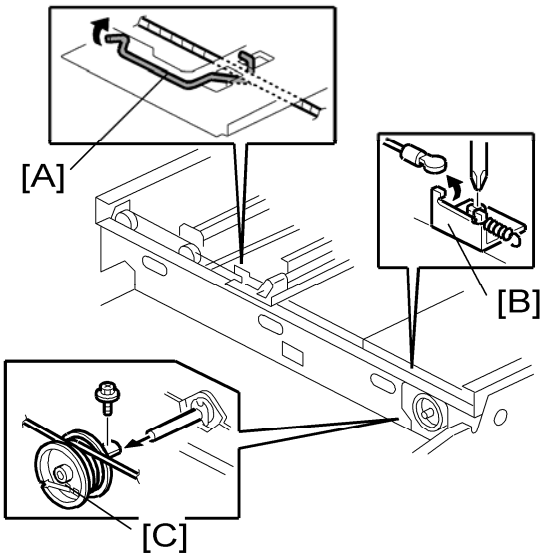


4. Front scanner wire clamp [A]
5. Front scanner wire bracket [B] (☞ x 1)
6. Front scanner wire and scanner drive pulley [C] (☞ x 1)

### *Reinstalling the Front Scanner Wire*

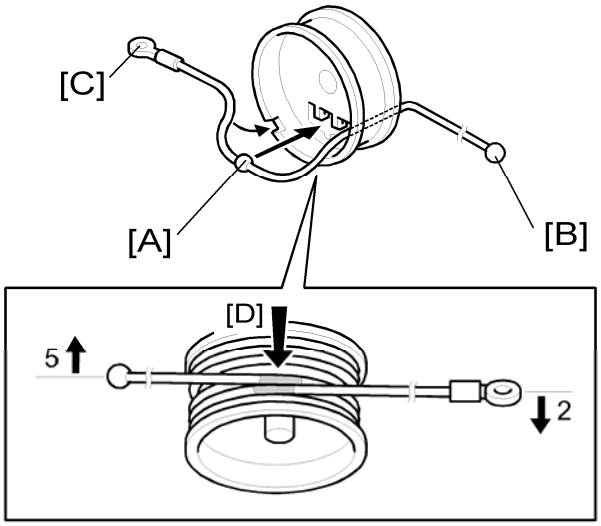


1. Position the center ball [A] in the middle of the forked holder.
2. Pass the right end (with the ball) [B] through the square hole. Pass the left end (with the ring) [C] through the notch.
3. Wind the right end counterclockwise (shown from the machine's front) five times. Wind the left end clockwise twice.

   Note

   - The two red marks [D] come together when you have done this. Stick the wire to the pulley with tape. This lets you easily handle the assembly at the time of installation.

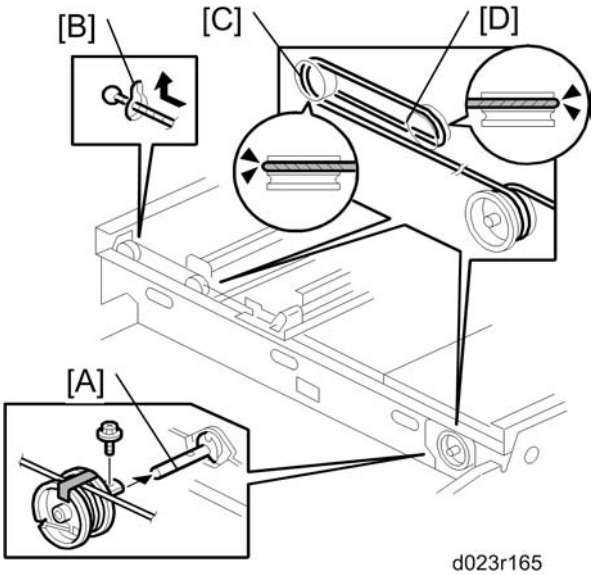


4. Install the drive pulley on the shaft [A].

Scanner Unit

Note

- Do not attach the pulley to the shaft with the screw at this time.

5. Insert the left end into the slit [B]. The end should go via the rear track of the left pulley [C] and the rear track of the movable pulley [D].

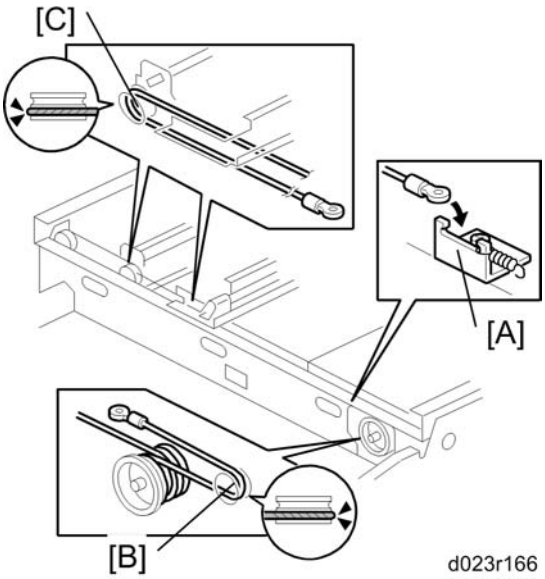


6. Hook the right end onto the front scanner wire bracket [A]. The end should go via the front track of the right pulley [B] and the front track of the movable pulley [C].

Note

- Do not attach the scanner wire bracket with the screw at this time.

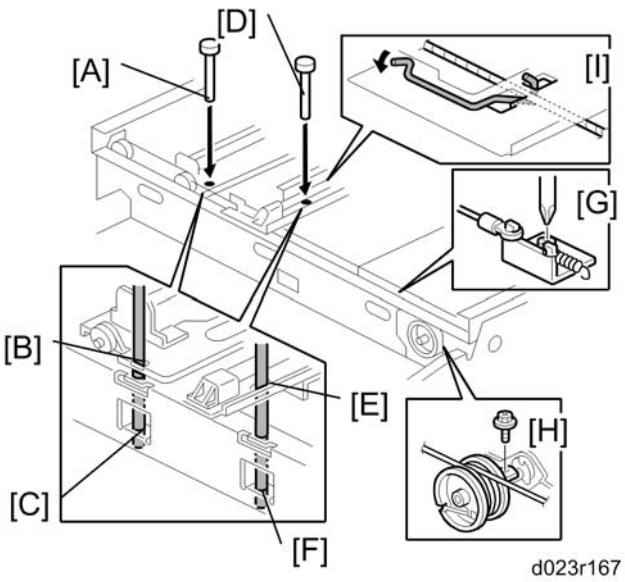


7. Remove the tape from the drive pulley.
8. Insert a scanner-positioning pin [A] through the 2nd carriage hole [B] and the left holes [C] in the front rail. Insert another scanner positioning pin [D] through the 1st carriage hole [E] and the right holes in the front rail [F].
9. Insert two more scanner positioning pins through the holes in the rear rail.
10. Screw the drive pulley to the shaft [G].
11. Screw the scanner wire bracket to the front rail [H].
12. Install the scanner wire clamp [I].
13. Pull out the positioning pins.

Note

- Make sure the 1st and 2nd carriages move smoothly after you remove the positioning pins. Do steps 8 through 13 again if they do not.

## 4.5.11 REAR SCANNER WIRE

1. Exposure glass (☛ p.4-20 "Exposure Glass")
2. Scanner left stay (☛ p.4-26 "Front Scanner Wire")

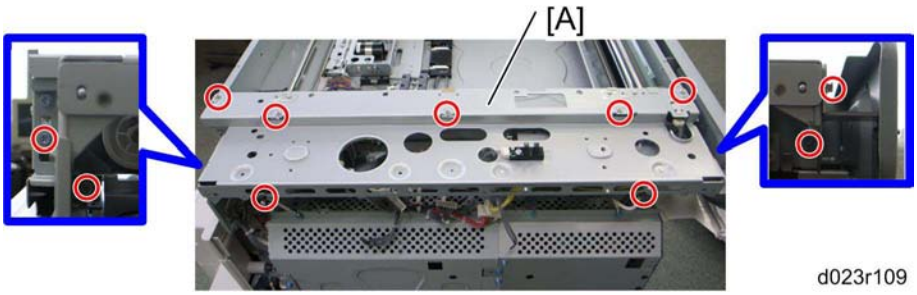


3. Scanner rear frame [A] (🔩 x 9, ground screw x 2, ✋ x All)
4. Follow the steps 3 through 5 in the “” Section. You can remove the rear scanner wire with the same manner for replacing the front scanner wire.

### *Reinstalling the Rear Scanner Wire*

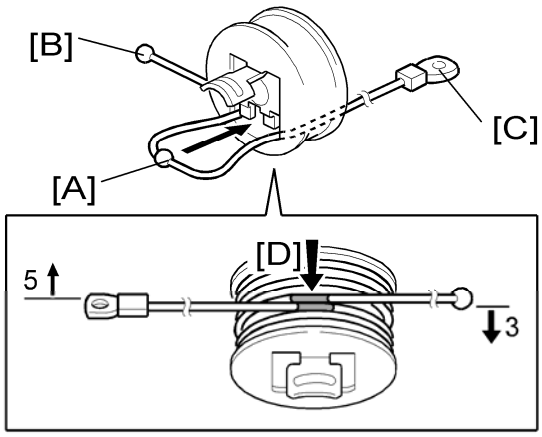


1. Position the center ball [A] in the middle of the forked holder.
2. Pass the left end (with the ball) [B] through the drive pulley notch. Pass the right end (with the ring) [C] through the drive pulley hole.
3. Wind the left end [B] clockwise (shown from the machine’s front) five times. Wind the right end [C] counterclockwise three times.

   Note

   - The two red marks [D] come together when you do this. Attach the wire to the pulley with tape. This lets you easily handle the assembly at the time of installation.
4. Install the drive pulley on the shaft.

Note

- Do not attach the pulley on the shaft with the screw at this time.

5. Install the wire.

Note

- The winding of the wire on the three pulleys at the rear of the scanner should be the same as the winding on the three pulleys at the front. This must show as a mirror image.

**Example:** At the front of the machine, the side of the drive pulley with the three windings must face the front of the machine. At the rear of the machine, it must face the rear.

6. Do steps 7 through 13 again in the “” Section.

## 4.5.12 TOUCH PANEL POSITION ADJUSTMENT

Note

- It is necessary to calibrate touch panel at the following times:
- When you replace the operation panel.
- When you replace the controller board.
- When the touch panel detection function does not operate correctly

Do not use items [2] to [9] on the Self-Diagnostic Menu. These items are for design use only.

1. Press [◈], press ①⑨⑨③, press [C/◎] 5 times to open the Self-Diagnostics menu.

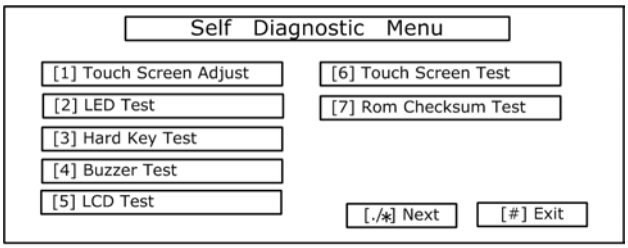


b178r548

2. On the touch screen press “Touch Screen Adjust” (or press ①).
3. Use a pointed (not sharp) tool to press the upper left mark.

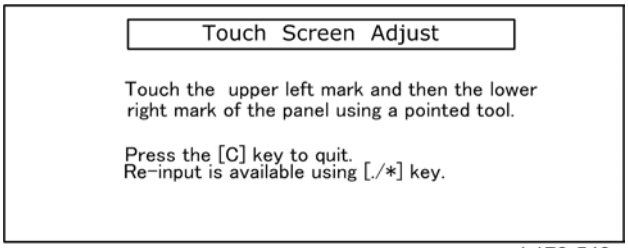


b178r549

4. Press the lower right mark when “↘” shows.
5. Press [#] OK on the screen (or press ⓗ) when you are finished.
6. Touch [#] Exit on the screen to close the Self-Diagnostic menu. Save the calibration settings.

# 4.6 LASER OPTICS

**⚠WARNING**

- Turn off the main switch and unplug the machine before beginning any of the procedures in this section. Laser beams can cause serious eye injury.

## 4.6.1 CAUTION DECAL LOCATION

Caution decals are placed as shown below.

d027r113

**⚠WARNING**

- Be sure to turn off the main switch and disconnect the power plug from the power outlet before beginning any disassembly or adjustment of the laser unit. This copier uses a class IIIb laser beam with a wavelength of 655 nm and an output of 7 mW. The laser can cause serious eye injury.

## 4.6.2 LASER OPTICS HOUSING UNIT

**CAUTION**

- Before installing a new laser optics housing unit, remove the sponge padding and the tag from the new unit.

Note

- A new laser optics housing unit has a bracket to protect the LD units. When you install the new unit, do not remove the bracket until near the end of the installation procedure (the correct time is stated in the manual).
- This bracket protects a capacitor on the unit. If the bracket is removed too early, you could break the capacitor on the corner of the main frame when you install the new unit.

### *Preparing the new laser optics housing unit*

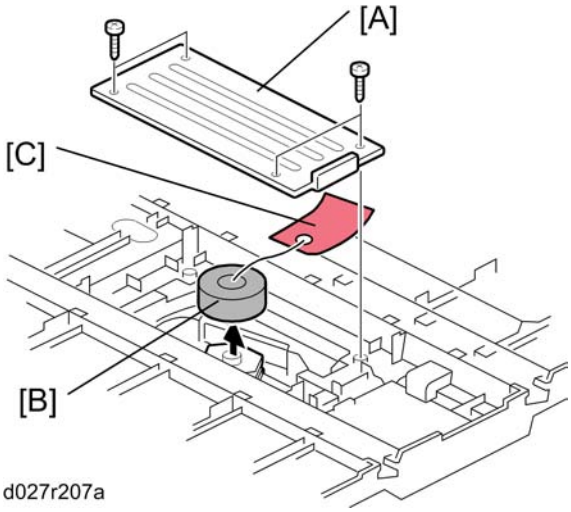


1. Polygon motor cover [A] of the laser optics housing unit (🔩 x 4)
2. Sponge padding [B]
3. Tag [C]
4. Reinstall the polygon motor cover [A].

### *Before removing the old laser optics housing unit*

Do the following settings before removing the laser optics housing unit. These are adjustments for skew adjustment motors in the laser optics housing unit.

1. Plug in and turn on the main power switch of the copier.
2. Enter the SP mode.
3. Execute SP9511-001 to clear the L2 lens positioning motor setting for Magenta.

4. Execute SP9511-002 to clear the L2 lens positioning motor setting for Cyan.
5. Execute SP9511-003 to clear the L2 lens positioning motor setting for Yellow.
6. Exit the SP mode.
7. Turn off the main power switch and disconnect the power cord of the copier.

### *Recovery procedure for no replacement preparation of laser optics housing unit*

If you did not do the procedure in ‘Before removing the old laser optics housing’ before removing the old laser optics housing unit, you must do the following.

1. Turn off the main power switch and disconnect the power cord of the copier.
2. Remove the left cover and harness cover bracket (see the following "Removing the old laser optics housing unit")

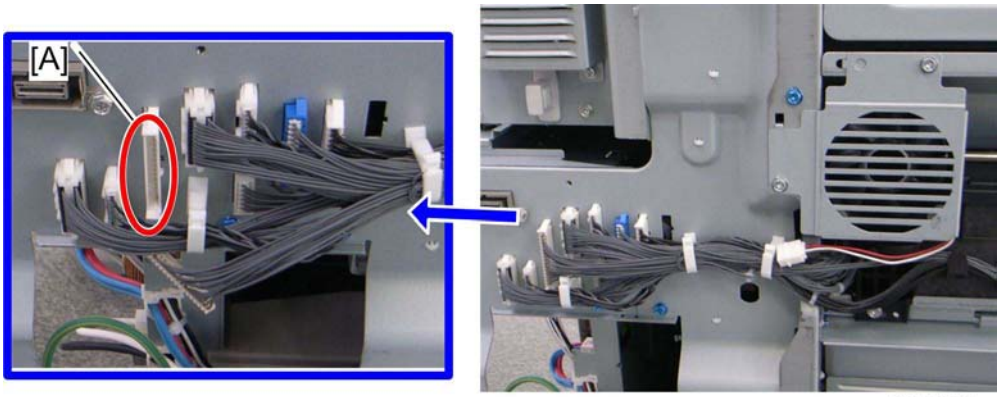


d027r610

3. Disconnect the harness [A] of the skew correction motor.
4. Do steps 1 to 7 of "Before removing the old laser optics housing unit".
5. Connect the harness [A] and reinstall the harness bracket and left cover.
6. Plug in and turn on the main power switch.

## *Removing the old laser optics housing unit*

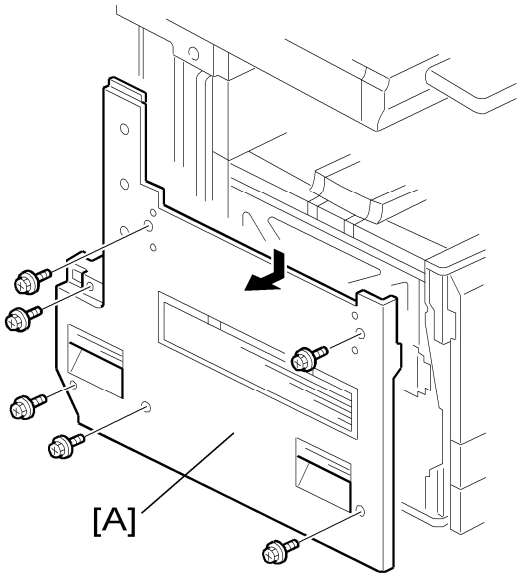


1. Left cover [A] (🔩 x 6)

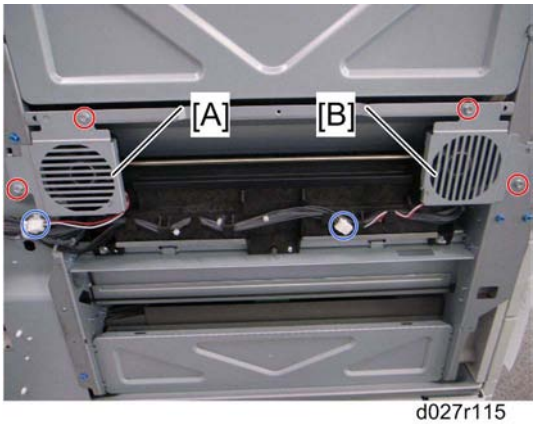


d027r115

2. Rear fan bracket [A] for the laser housing optics unit (🔩 x 2, ✋ x 1)
3. Front fan bracket [B] for the laser housing optics unit (🔩 x 2, ✋ x 1)

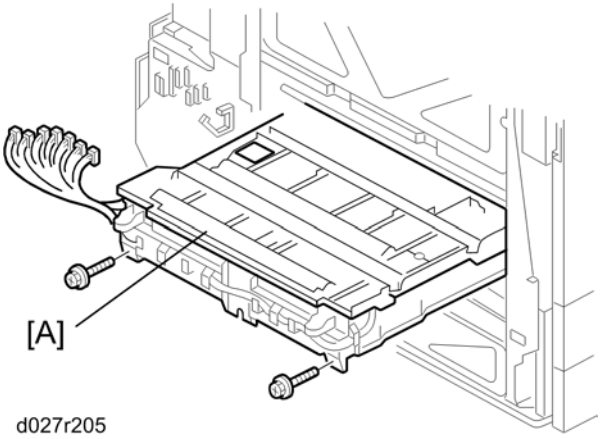


d027r205

4. Remove the old laser optics housing unit [A] (x 2, All 's, x 3)

### *Installing a new Laser Optics Housing Unit*

Note

- A new laser optics housing unit has a bracket to protect the LD units. When you install the new unit, do not remove the bracket until near the end of the installation procedure (the correct time is stated in the manual).
- This bracket protects a capacitor on the unit. If the bracket is removed too early, you could break the capacitor on the corner of the main frame when you install the new unit.

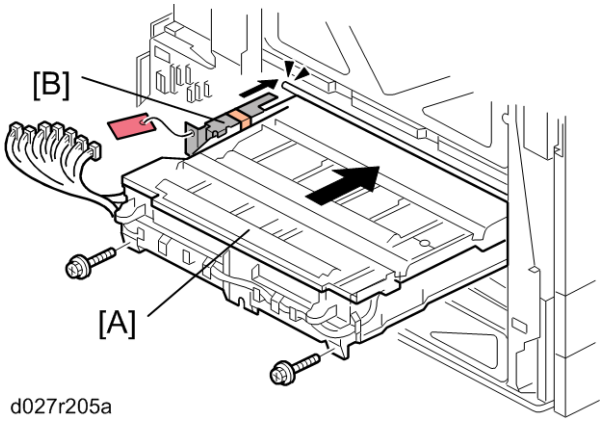


1. Push the new laser optics housing unit [A] slowly into the copier until the bracket [B] bumps against the frame of the copier.
2. Remove the bracket [B], and then push the new laser optics housing unit fully into the copier (x 2, All 's, x 3).
3. Reassemble the machine.

### *After installing the new laser optics housing unit*

Do the following adjustment after installing the new laser optics housing unit.

1. Plug in and turn on the main power switch.

Laser Optics

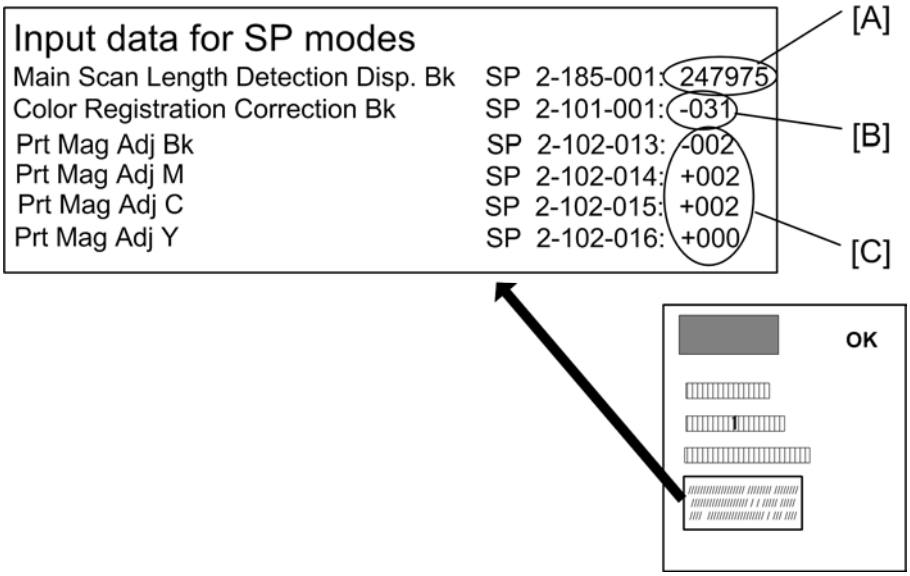


2. Adjust the main scan magnification for K, M, C, Y.
   - Input the standard values [C] provided with a new laser optics housing unit for the main scan magnification adjustment with SP2-102-013, 014, 015, 016.

     Note

     - The values [C] are different for each laser optics housing unit.
3. Adjust the main scan magnification only for black (K).
   - Input the standard value [A] provided with a new laser optics housing unit for the main scan magnification adjustment with SP2-185-001.

     Note

     - The value [A] is different for each laser optics housing unit.
   - Print the test pattern (14: 1-dot trimming pattern in the SP2-109-003).
   - Check that the left and right trim margin is within 4 ± 1 mm. If not, change the standard value for the main scan magnification adjustment.
4. Adjust the main scan registration only for black (K).
   - Input the registration value [B] provided with a new laser optics housing unit for the main scan registration adjustment with SP2101-001.

     Note

     - The value [B] is different for each laser optics housing unit.
   - Print the test pattern (14: 1-dot trimming pattern in the SP2-109-003).
   - Check that the left trim margin is within 2 ± 1 mm. If not, change the registration value for the main scan registration adjustment.
5. Select "0" with SP2-109-003 after printing the "1-dot trimming pattern.
6. Do the line position adjustment.

- First do SP2-111-3.
- Then do SP2-111-1.

  To check if SP 2-111-1 was successful, watch the screen during the process. A message is displayed at the end. Also, you can check the result with SP 2-194-10 to -12.

7. Exit the SP mode.

After you replace the housing unit, do the adjustments in the following section of the manual: Image Adjustment – Registration.

## 4.6.3 POLYGON MIRROR MOTOR AND DRIVE BOARD

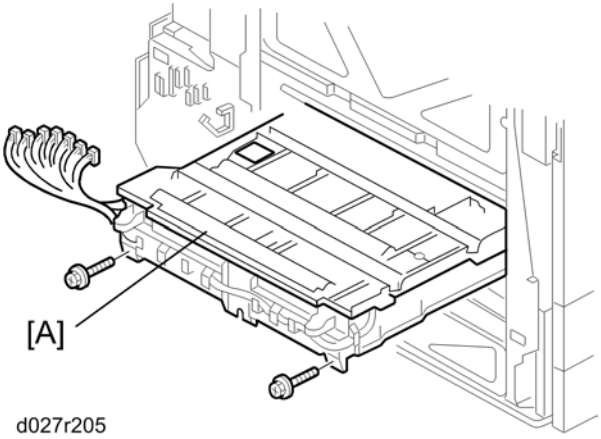


1. Laser optics housing unit [A] (☛ p.4-33 "Laser Optics Housing Unit")

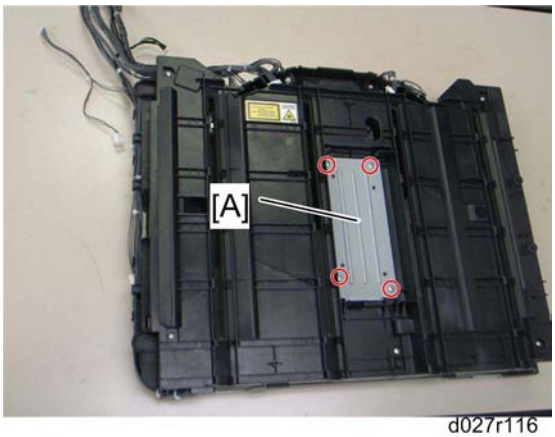


2. Polygon mirror motor cover [A] of the laser optics housing unit (🔩 x 4)

Laser Optics

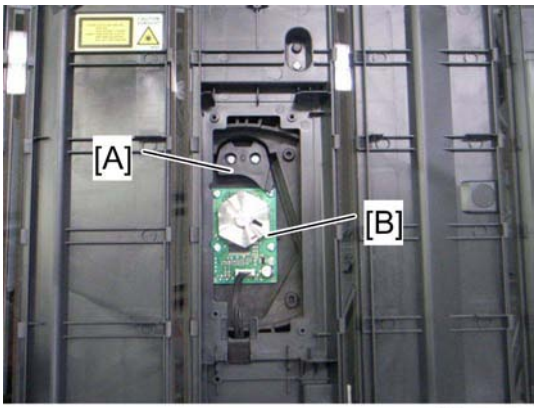


d027r117

3. Polygon mirror motor holder [A] (🔩 x 2)
4. Polygon mirror motor [B] (🔩 x 4, 🔌 x 1)

After installing the polygon mirror motor:

1. Do the "Forced Line Position Adj. Mode c" (SP2-111-3).
2. Then do the "Forced Line Position Adj. Mode a" (SP2-111-1).

To check if SP 2-111-1 was successful, watch the screen during the process. A message is displayed at the end. Also, you can check the result with SP 2-194-10 to -12.

After you replace the motor, do the adjustments in the following section of the manual: Image Adjustment – Registration.

# 4.7 IMAGE CREATION

## 4.7.1 PCU

Note

- Do not touch the OPC drum. Do not let metal objects touch the development sleeve.

1. Open the front door.

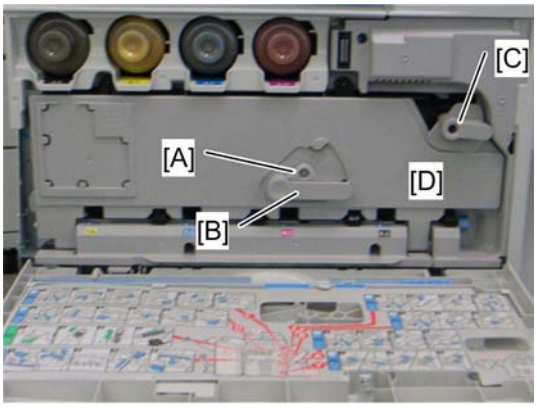


d027r118

2. Lever lock [A] (🔩 x 1)
3. Turn the drum positioning plate lever [B] and the image transfer unit lock lever [C] counter-clockwise.
4. Open the drum positioning plate [D].

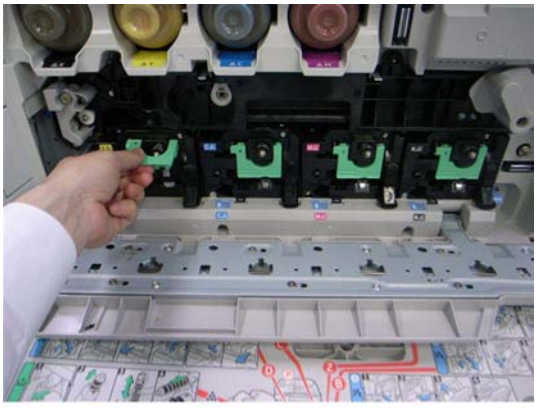

d027r119

5. Pull out the PCU (hold the grip while you pull it out).

## 4.7.2 DRUM UNIT AND DEVELOPMENT UNIT

The new drum unit has a front cover and a front joint. When you attach the new drum unit to the development unit, remove a front cover and a front joint at first.

And use them for reassembling the new drum unit and development unit.

1. If you install a new drum unit, set SP 3902-xxx to "1".
   - Black: 3902-009
   - Yellow: 3902-010
   - Cyan: 3902-011
   - Magenta: 3902-012

   Note

   - If you do this, then the machine will reset the PM counter for the drum unit automatically, after you turn the power on again.
2. Turn the machine power off.
3. PCU (☛p.4-41 "PCU")

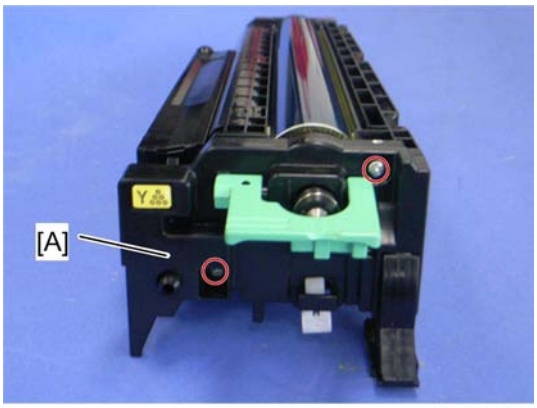


d027r120

4. Front cover [A] (🔩 x 2)

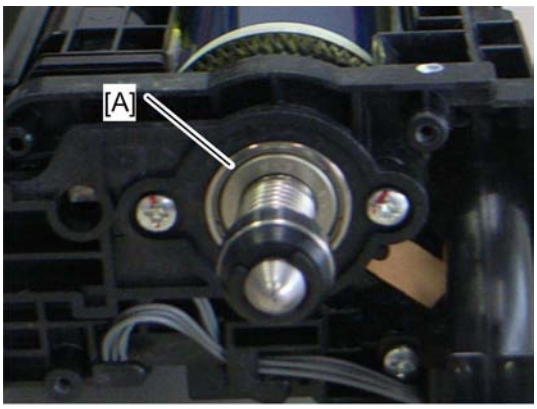


d027r121

Note

- Do not touch the bearing [A] after removing the front cover. The bearing is properly applied with lubricant.

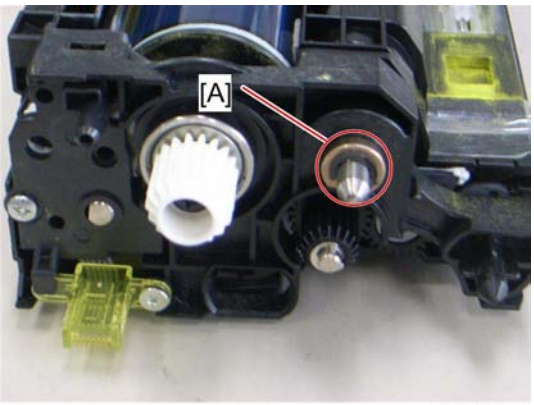


d027r122

5. Remove the bushing [A] of the development roller at the rear of the PCU (ℂ x 1).

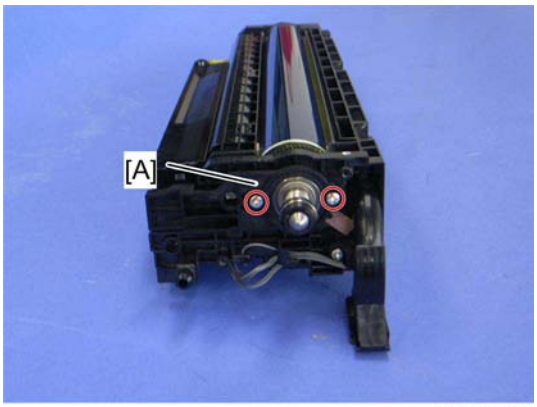


d027r123

6. Remove the front joint [A] (🖉 x 2, ☞ x 1).

Note

- The front joint [D] is firmly set. Remove it with a flat screwdriver.

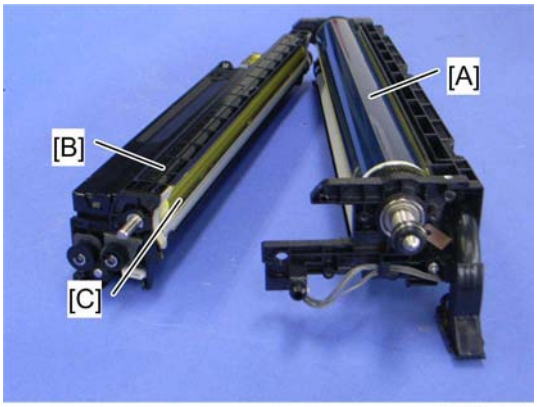


d027r124

7. Drum unit [A] and Development Unit [B]

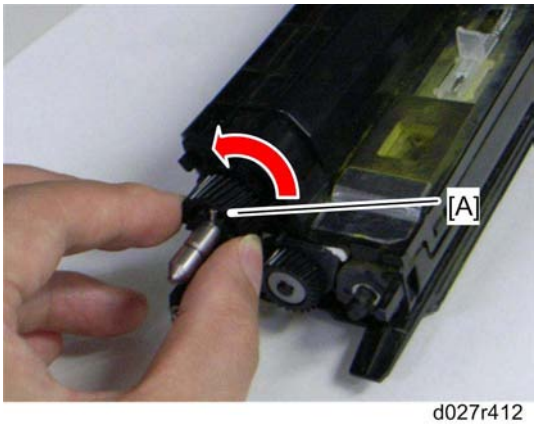


d027r412

8. Rotate the development roller [A] five or six times in the counterclockwise direction.

Note

- This step removes developer that has stuck to the development roller, which would cause color unevenness.

Note

- When the development unit is removed from the drum unit, clean the entrance mylar [C] with a vacuum.

9. If you change the development unit, do the ACC procedure.
10. Execute the drum phase adjustment with SP1902-001 twice.

**When reassembling the PCU:**

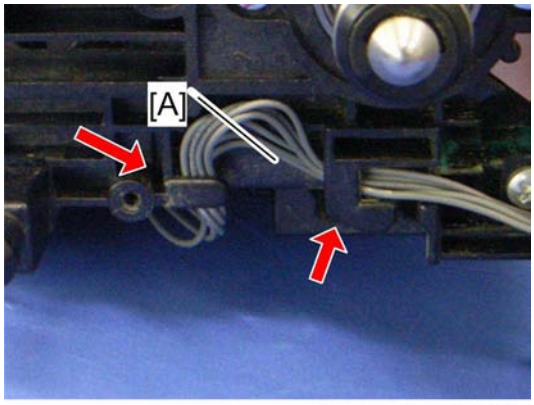


d027r681

- Make sure that the harness [A] is hooked as shown.

## *Developer*

1. Set SP 3902-xxx to "1".

   Black: 3902-005

   Yellow: 3902-006

   Cyan: 3902-007

   Magenta: 3902-008

2. Turn the machine power off.
3. Development unit (☛p.4-41 "Drum Unit and Development Unit")

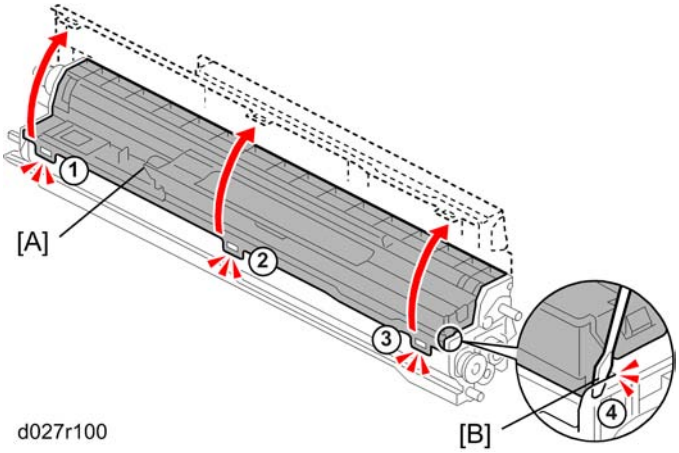


4. Hopper cover [A] (4 hooks)
   - Release the three hooks first in the correct order (from ① to ③).
   - Put the head of a screwdriver in the groove gap [B] as shown, and then release the hook ④.

**⚠CAUTION**

- Follow the correct order ① to ④. Otherwise, the hopper cover may be damaged.
- The hook ④ breaks easily.

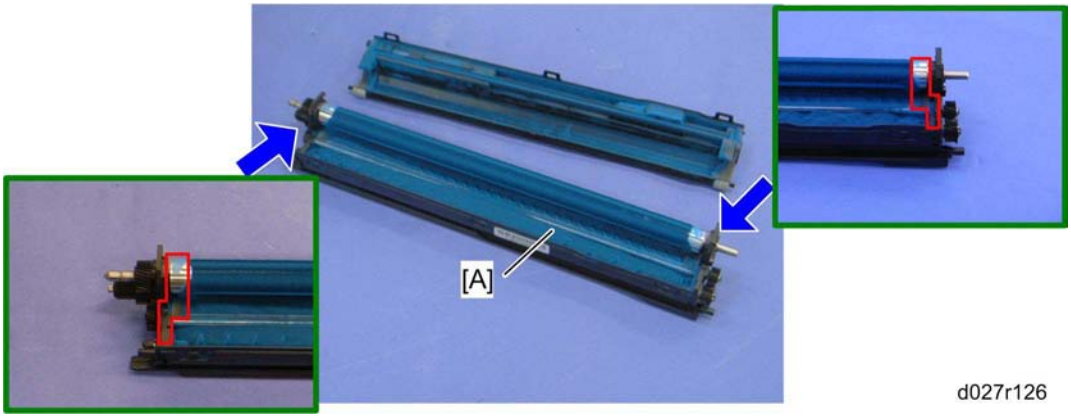


5. Shake a bag of developer and pour it into the development hopper [A].
6. Reattach the hopper cover (hook x 3).

Image Creation

**CAUTION**

- Keep the developer off at both ends of the development unit enclosed in red lines in the diagram.

7. Turn the machine power on. The machine initializes the developer and resets the PM counter for the developer. (For details of the developer initialization result, see "Developer Initialization Result" in the "Troubleshooting" chapter.
8. Do the ACC procedure.

## 4.7.3 TONER COLLECTION BOTTLE

If you will install a new bottle, and the old bottle is not in a full or near-full condition, then set SP 3902-017 to 1.

Note

- If you do this, then the machine will reset the PM counter for the bottle automatically, after you turn the power on again.
- If the bottle is in a full or near-full condition, it is not necessary to do this.

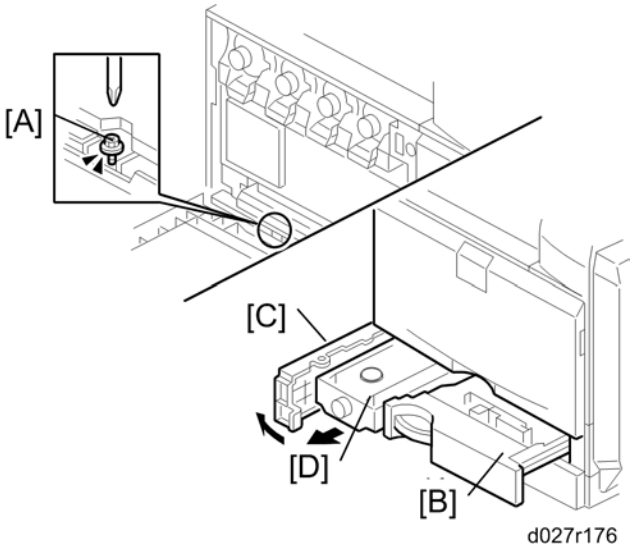


1. Turn off the main power switch.
2. Open the front door and remove the screw [A].
3. Close the front door.
4. Pull out tray 1 [B].
5. Open the toner collection bottle door [C].
6. Pull out the toner collection bottle [D].

## 4.7.4 SECOND DUCT FAN

1. Rear cover (☛p.4-15 "Rear Cover")
2. Right rear cover (☛p.4-15 "Right Rear Cover")
3. Open the controller box (☛p.4-122 "Controller Box")

d027r127

4. Second duct [A] ( x 2, x 1, x 2)

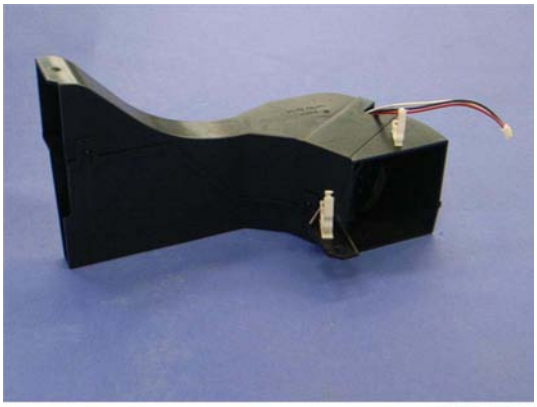

d027r128

5. Split the second duct (4 hooks).

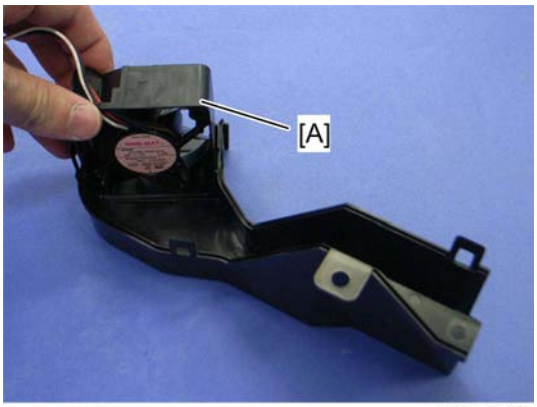


d027r129

6. Second duct fan [A]

### *When reinstalling the second duct fan*

Make sure that the second duct fan is installed with its decal facing to the front of the machine.

## 4.7.5 THIRD DUCT FAN

1. Rear cover (☛p.4-15 "Rear Cover")
2. Right rear cover (☛p.4-15 "Right Rear Cover")
3. Controller box (☛p.4-122 "Controller Box")

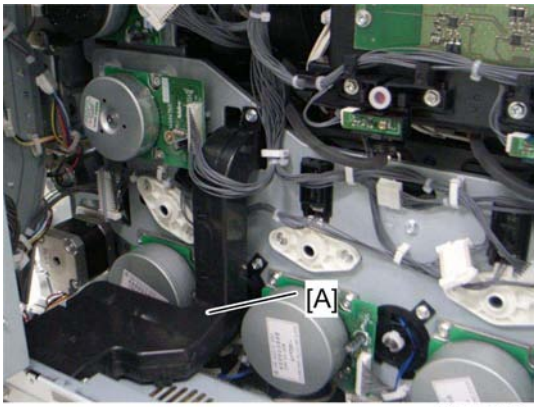


d027r130

4. Third duct [A] (🪛 x 2, ✋ x 1)

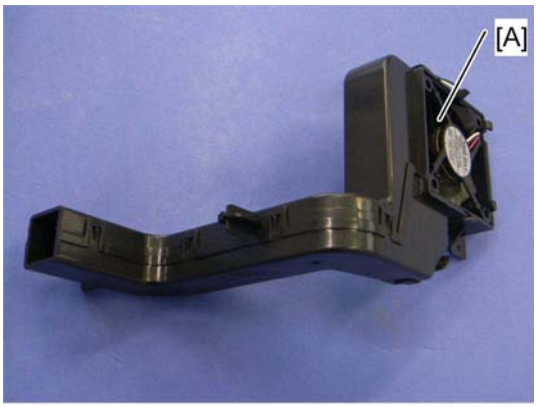


d027r131

5. Third duct fan [A] (3 hooks)

### *When reinstalling the third duct fan*

Make sure that the third duct fan is installed with its decal facing to the upper side of the machine.

## 4.7.6 TONER PUMP UNIT

There are four pump units inside the machine. This procedure describes the replacement procedure only for one unit. If you need to replace another unit, do the same as this procedure.

Note

- Put some sheets of paper on the floor before doing this procedure. Toner may fall on the floor.

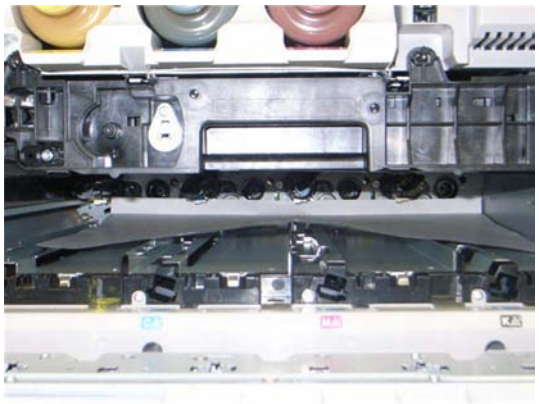

d027r132

1. Front door (☛p.4-15 "Rear Cover")
2. Image transfer belt unit (☛p.4-55 "Image Transfer Belt Unit")
3. All PCUs (☛p.4-41 "PCU")
4. Put a sheet of paper (A3/DLT) inside the machine as shown and on the floor.

   Note

   - The sheet of paper on the floor is used in a later step.

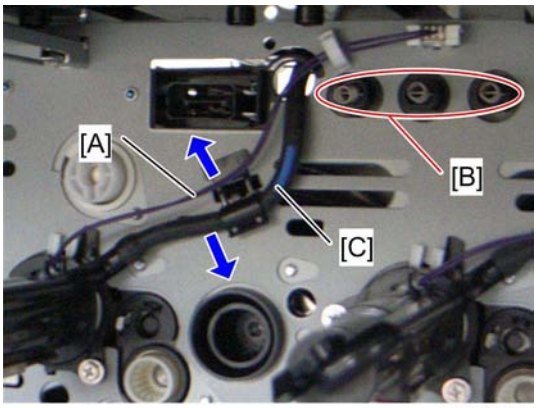


d027r134

5. Release the harness [A] from the clamp (x 1 for YCM, x 2 for K) and hook, and then disconnect the harness.

   Note

   - Avoid touching these spring terminals [B].

6. Release the toner supply tube [C].

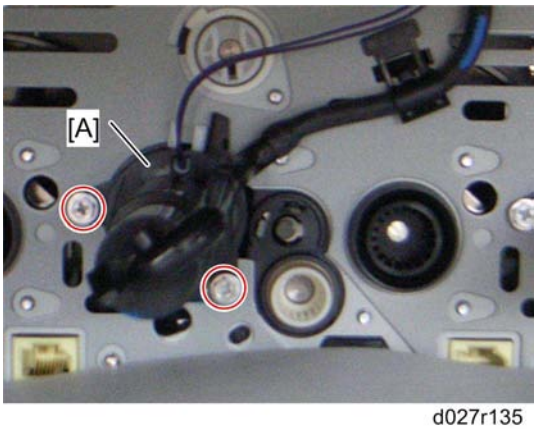


d027r135

7. Remove the toner pump unit [A] (🖉 x 2)

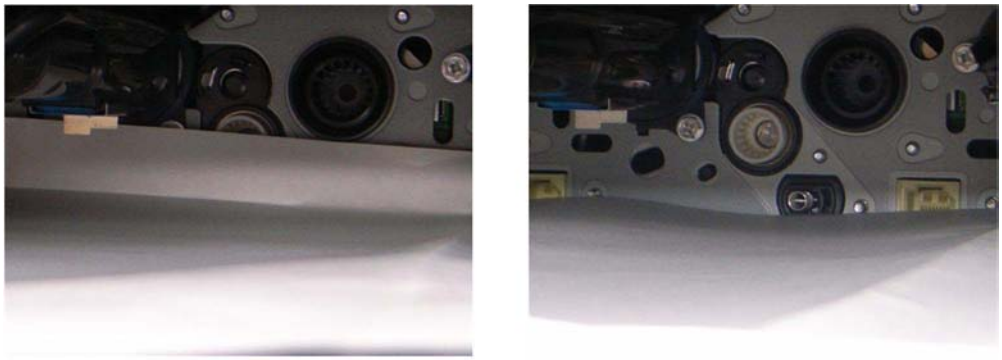

d027r136

- Make sure that a sheet of paper is attached to the frame of the rear side. The picture on the left shows a sheet of paper that is correctly set, but the picture on the right shows a sheet of paper that is not correctly set. This sheet of paper prevents toner and screws from falling into the laser optics housing unit through cutouts.

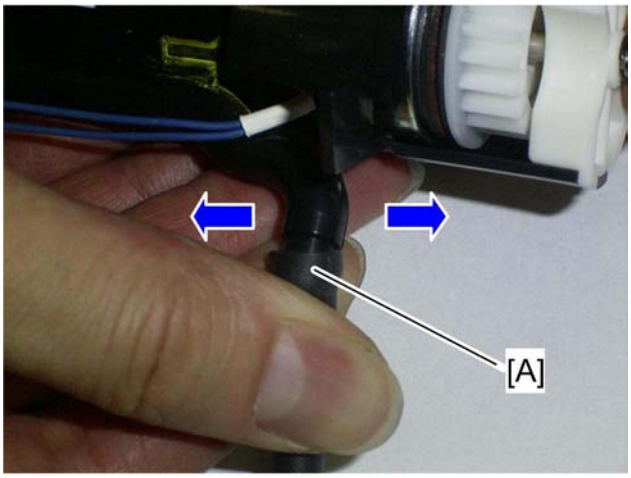


d027r705

1. Slowly remove the toner supply tube [A] from the toner pump unit by pulling the tube

right and left.

2. Turn up the openings of the toner pump unit and toner supply tube just after removing the tube.

Note

- If not, the toner may scatter away and fall down.

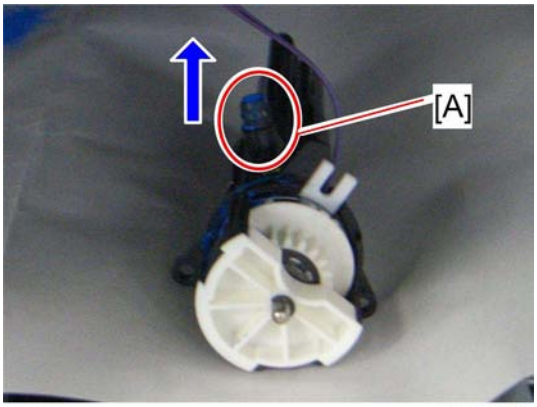


d027r137

3. Put the toner pump unit on the sheet of paper, which has been put in step 4, with its opening [A] up.

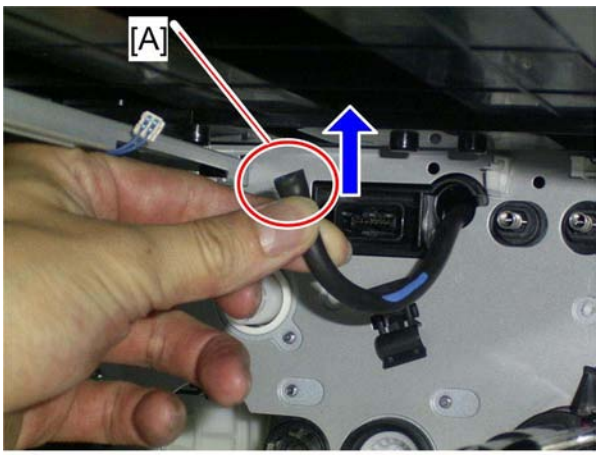


d027r707

4. Keep the opening [A] of the toner supply tube up, and then clip the opening of the toner supply.

### *When you install the new toner pump unit*

Before installing the new toner pump unit, mask the opening of the old toner pump unit with tape. Dispose of it following local rules.

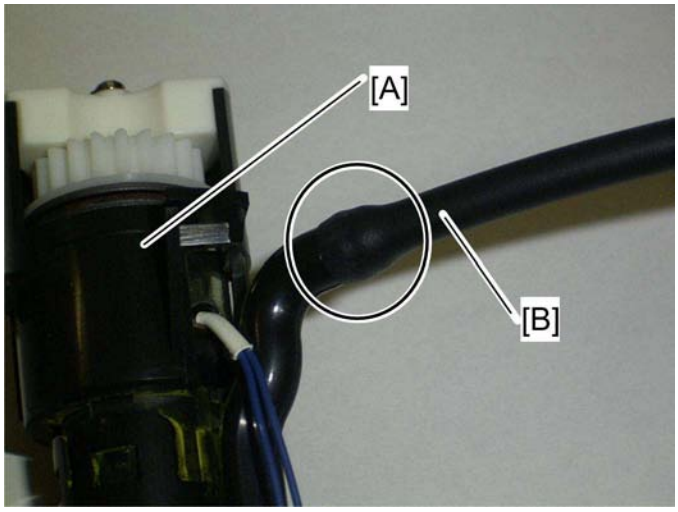


1. Put a sheet of paper (A3/DLT) inside the machine.
2. Turn up the opening of the toner supply tube, and then remove the object that was used to clip the opening of the toner supply tube.
3. Insert the opening of the toner pump unit [A] into the opening of the toner supply tube [B] as far as possible.

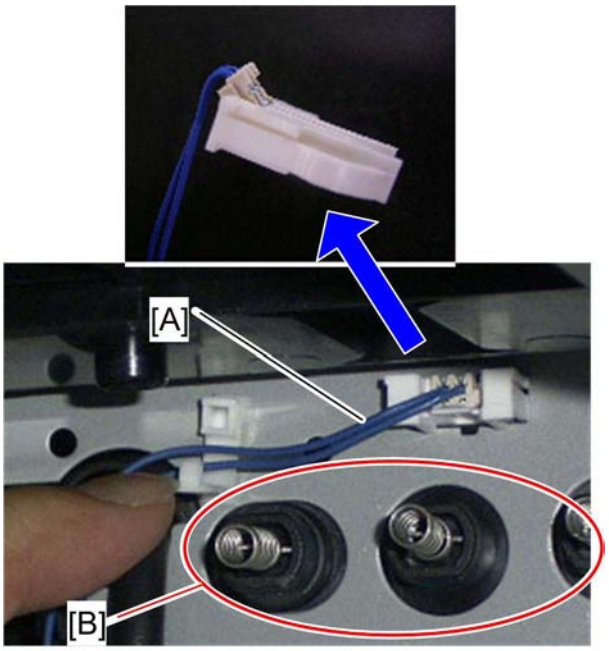


d027r709

4. Connect the harness [A] to the connector of the machine.

Note

- On the above picture, the magnified picture of the connector shows the easiest way to connect it.

5. Clamp the harness [A] (☏ x 1 for YCM, ☏ x 2 for K).

Image Creation

Note

- Avoid touching these spring terminals [B].

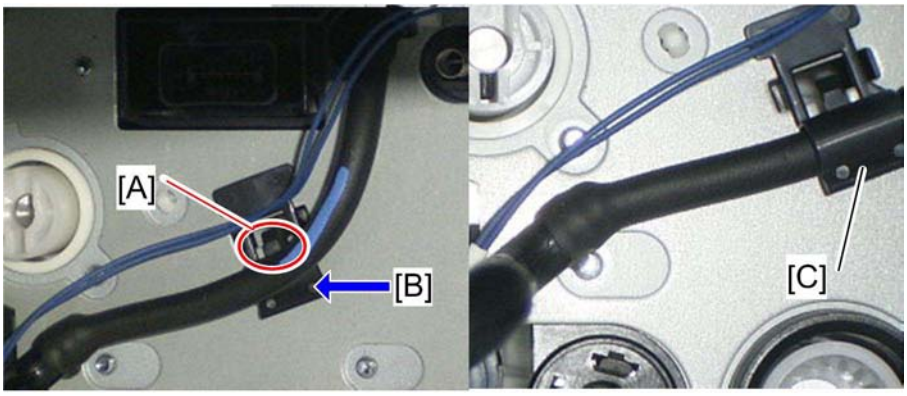


d027r710

6. Pass the harness of the toner pump unit behind the hook [A], while pressing at [B].
7. Secure the toner supply tube with the holder [C], lifting up the edge of the holder "very gently".

Note

- Be careful when you lift the edge of the holder, because the holder is easily broken.

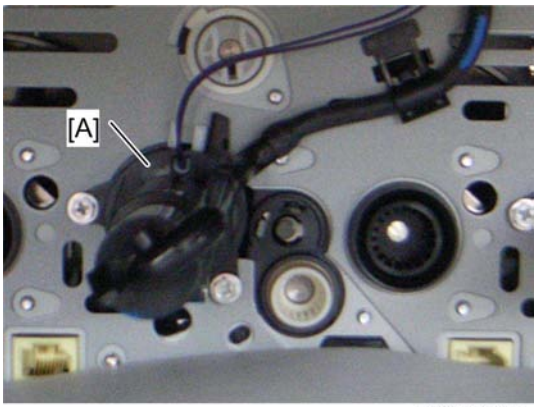


d027r135a

8. Insert the toner pump unit [A] into the rear frame of the machine (🔩 x 2).

## 4.7.7 TONER END SENSOR

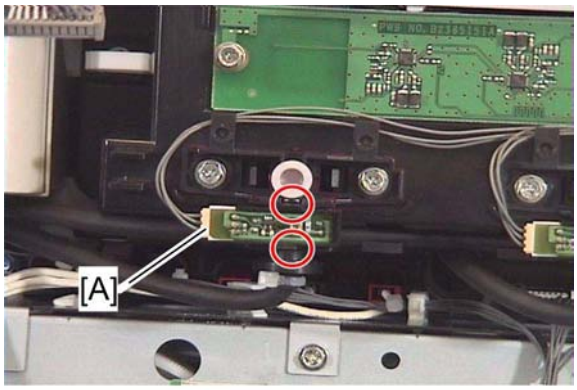


d027r042

1. Rear cover (☛p.4-15 "Rear Cover")
2. Open the controller box (☛p.4-122 "Controller Box")
3. Toner end sensor [A] (☶ x 1, 2 hooks each)

# 4.8 IMAGE TRANSFER

## 4.8.1 IMAGE TRANSFER BELT UNIT

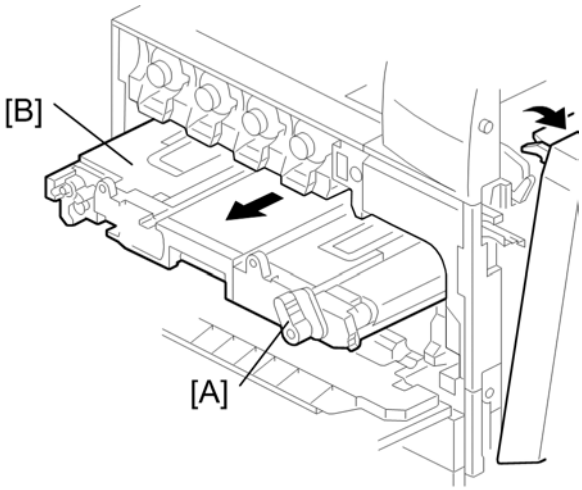


d027r171

1. Open the right door.
2. Open the front door.
3. Open the drum positioning plate. (☛p.4-41 "PCU")
4. Turn the image transfer belt unit lock lever [A] counterclockwise.
5. Pull out the image transfer belt unit [B] halfway.

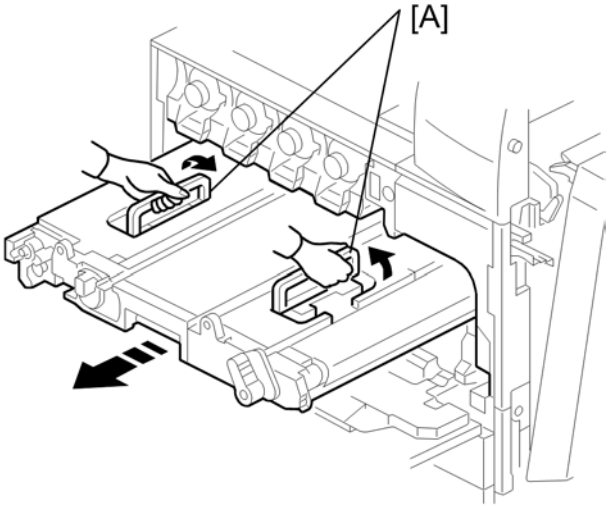


d027r172

6. Grasp the handles [A], and then pull out the image transfer belt unit fully.

## 4.8.2 IMAGE TRANSFER BELT CLEANING UNIT

1. If you will install a new belt cleaning unit, then set SP 3902-015 to 1.

   Note

   - If you do this, then the machine will reset the PM counter for the belt cleaning unit automatically, after you turn the power on again.
     Do not use SP3902-015 or 013 if you replace the complete ITB unit.
2. Turn off the main power switch.
3. Open the right door.
4. Open the front door.
5. Open the drum positioning plate. (☛p.4-41 "PCU")

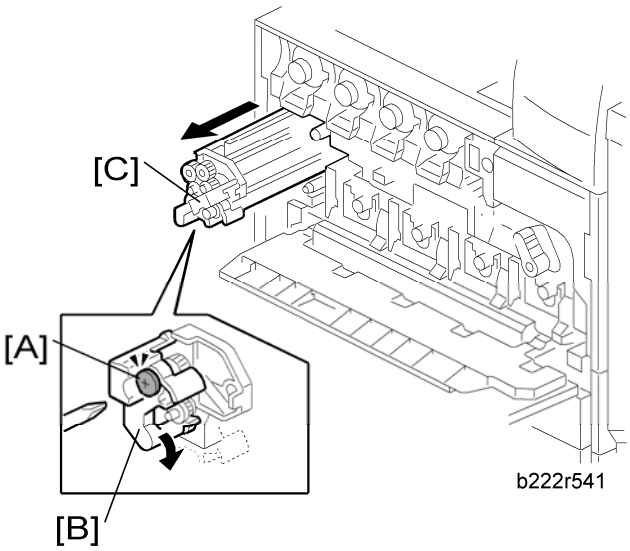


6. Loosen the screw [A].
7. Turn the lock lever [B] clockwise
8. Pull out the image transfer belt cleaning unit [C].

## 4.8.3 IMAGE TRANSFER BELT

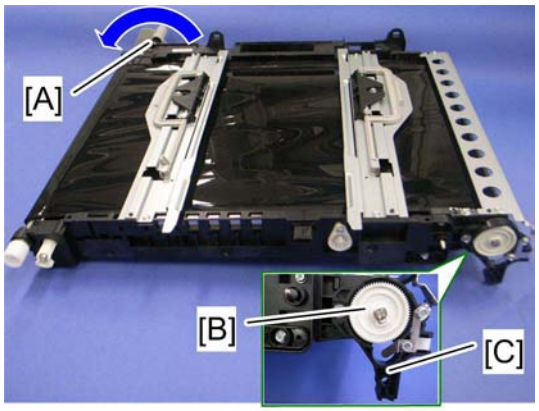


d027r138

1. Image transfer belt cleaning unit (☛p.4-55 "Image Transfer Belt Cleaning Unit")
2. Image transfer belt unit (☛p.4-55 "Image Transfer Belt Unit")
3. Turn the image transfer unit contact lover [A] counterclockwise (as seen from the rear).
4. Gear [B] (hook x 1)
5. Turn the gear cover [C] clockwise (as seen from the rear) (🖉 x 1).

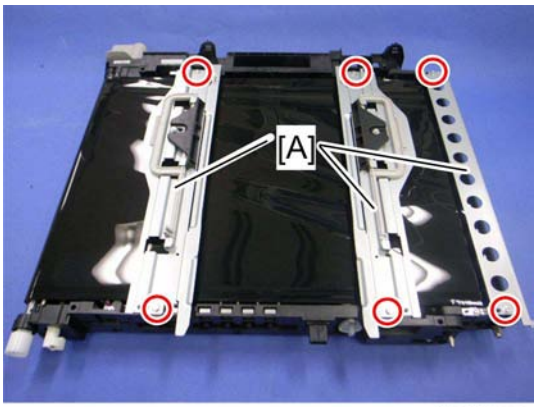


d027r139

6. Three stays [A] (🖉 x 6)

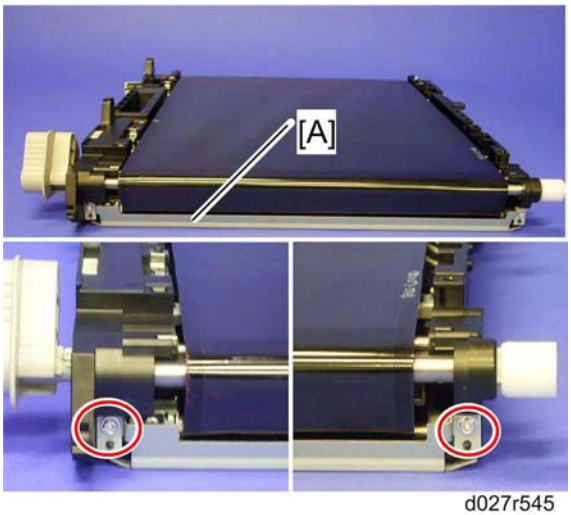


d027r545

7. Guide plate [A] (as seen from the right side of the machine) (☞ x 2)

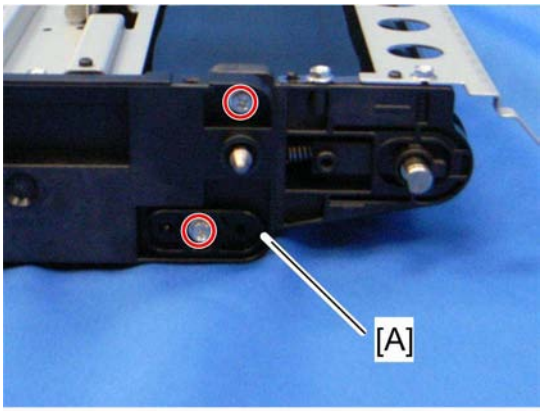


d027r545a

8. Remove the two screws and then the rear holder bracket [A] (as seen from the rear).

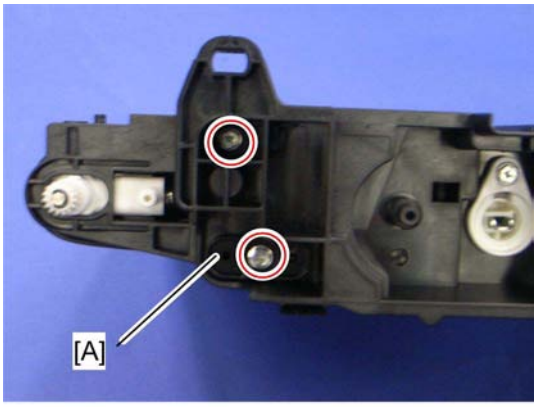


d027r140

9. Remove the two screws and then the front holder bracket [A] (as seen from the front).

b222r548

10. Put the front side of the image transfer belt unit on a corner of the table or a box as shown.

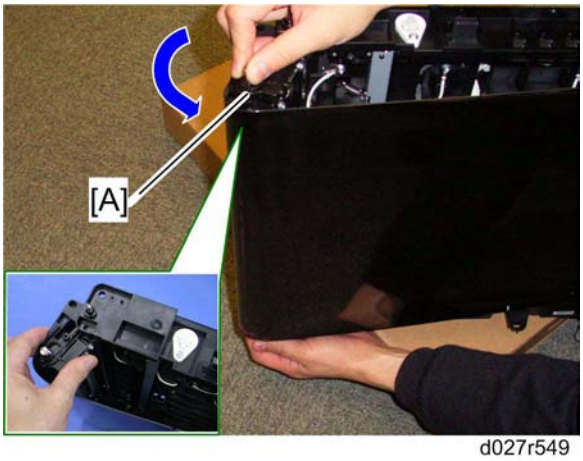


11. Pull the tension roller [A] as shown.

12. Image transfer belt [A]

### *When reinstalling the image transfer belt*

- Clean all rollers with dry cloth before installing the image transfer belt.

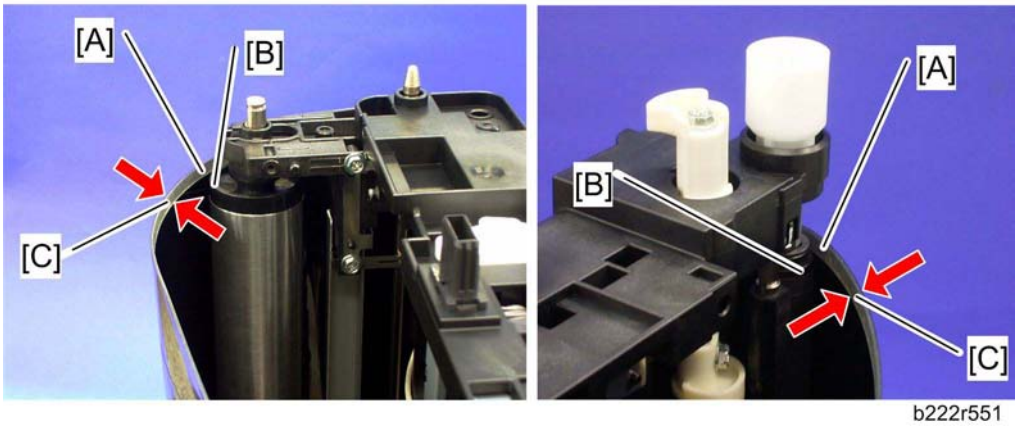


- There is a rim [A] at each edge of the transfer belt. The ends of all the rollers ([B] for example) in the transfer belt unit must be between the two rims.

Note

- There are two rims (width [C]: about 5 mm) on the underside of the front and rear edges of the image transfer belt.

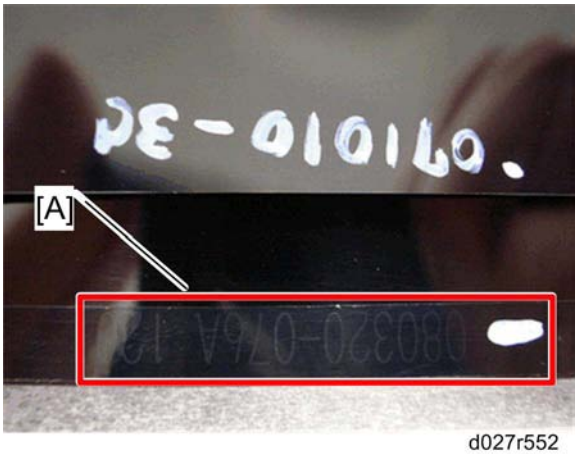


d027r552

- This belt must be installed the correct way around. When you reinstall the image transfer belt unit, install it with the number [A] on the belt at the rear side of the unit.

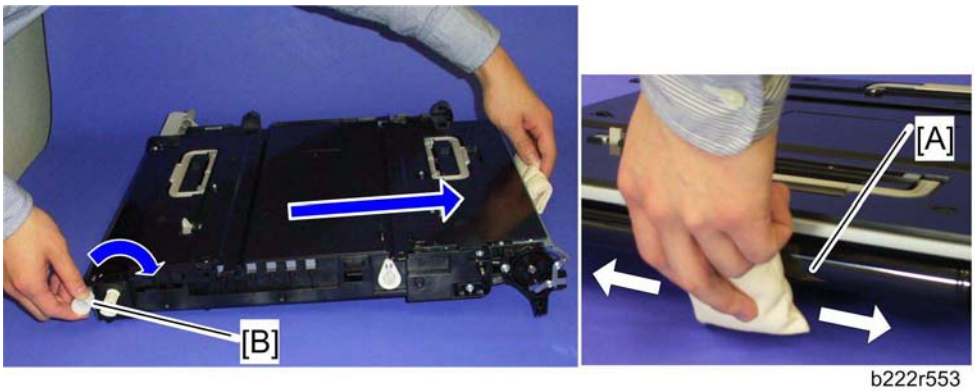


b222r553

- Put "Lubricant Powder" (B132 9700) on the surface of the image transfer belt [A], while you turn the drive gear [B] at a constant speed, as shown. (The straight arrow in the picture shows belt movement direction.) Lubricant powder prevents the image transfer cleaning blade from turning up.

Note

- Do not put the lubricant powder at the right side of the image transfer belt unit (the above picture is taken from the rear). Otherwise, lubricant powder may damage the encoder sensor.

# 4.9 PAPER TRANSFER

## 4.9.1 PAPER TRANSFER ROLLER UNIT

If you will install a new paper transfer unit, then set SP 3902-016 to 1.

Note

- If you do this, then the machine will reset the PM counter for the paper transfer unit automatically, after you turn the power on again.

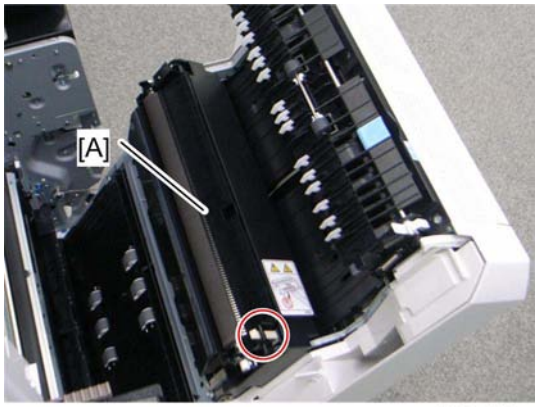


d027r141

1. Open the right door.
2. Release the white hook.
3. Paper transfer roller unit [A]

## 4.9.2 PAPER TRANSFER UNIT

If you will install a new paper transfer unit, then set SP3-902-016 to 1.

Note

- If you do this, then the machine will reset the PM counter for the paper transfer unit automatically, after you turn the power on again.

1. Turn off the main power switch.

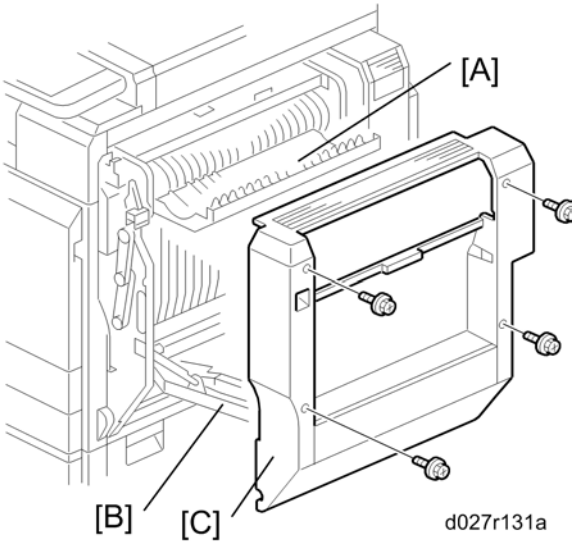


2. Open the duplex door [A].
3. Open the by-pass tray [B]
4. Right door cover [C] (🔩 x 4)
5. Open the right door.

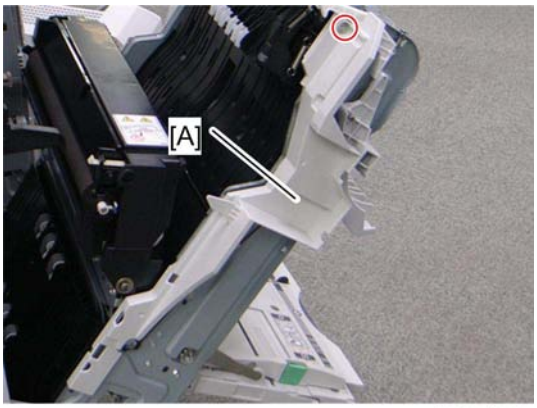


d027r143

6. Right door inner cover [A] (🔩 x 1)

Paper Transfer

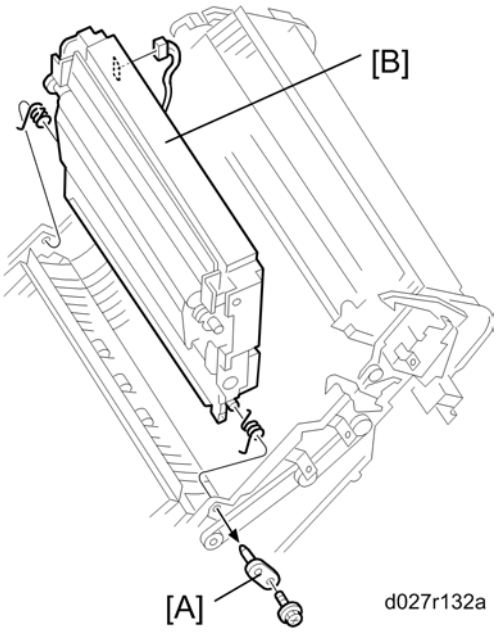


7. Pivot bracket [A] ( x 1)
8. Paper transfer unit [B] ( x 1, 2 springs)

## 4.9.3 HIGH VOLTAGE SUPPLY BOARD - DISCHARGE PLATE

1. Open the right door.

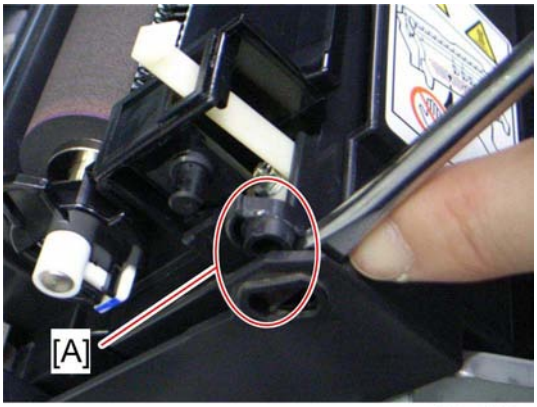


d027r144

2. Release the front [A] and rear pivots of the paper transfer roller case.

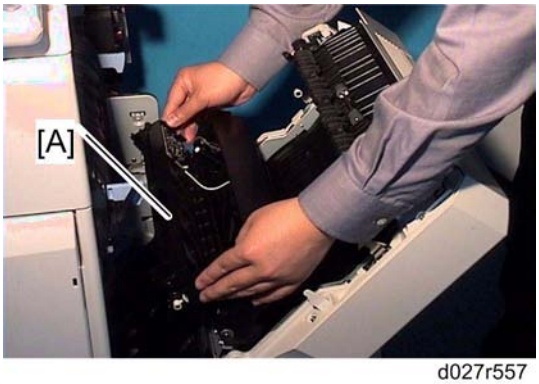


d027r557

3. Paper transfer roller case [A]

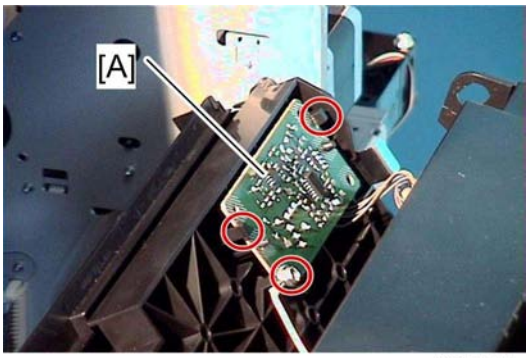


d027r558

4. High voltage supply board [A] (🔩 x 3, 🖐 x 1, ground cable x 1)

## 4.9.4 ID SENSOR BOARD

1. K PCU (☛p.4-41 "PCU")
2. Open the right door.
3. Fusing unit (☛p.4-87 "Fusing Unit")
4. Image transfer belt unit (☛p.4-55 "Image Transfer Belt Unit")

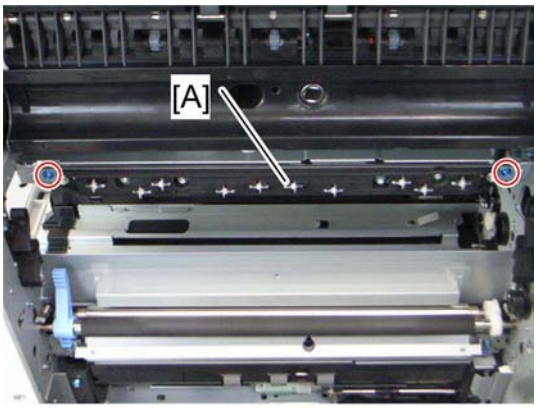


d027r145

5. ID sensor unit [A] (🔩 x 2, 🔩 x 2, 🔩 x 1)

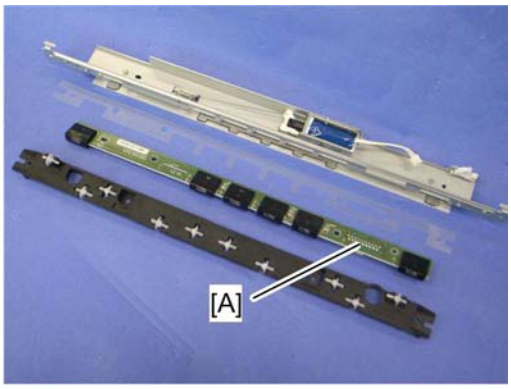


d027r146

6. ID sensor board [A] (🔩 x 6)

### *Cleaning for ID sensors*

ID sensors require a cleaning procedure every EM. Do the following steps for ID sensor cleaning.

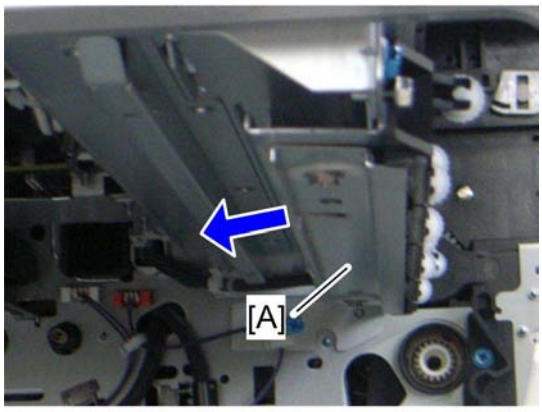


d027r147

1. K PCU (☛p.4-41 "PCU")
2. Fusing unit (☛p.4-87 "Fusing Unit")
3. Image transfer belt unit (☛p.4-55 "Image Transfer Belt Unit")
4. Slide the ID sensor shutter [A] to the left side.
5. Clean the ID sensors keeping the ID sensor shutter to the left.

### *After installing a new ID sensor unit/board*

Do the following adjustment after installing a new ID sensor unit/board.

1. Plug in and turn on the main power switch of the copier.
2. Enter the SP mode.
3. Input all correction coefficients [A] for the ID sensor with the SP modes referring to the barcode sheet provided with the new ID sensor unit/board.

   Note

   - For example, input "**1.00**" with SP3-362-013.
4. Exit the SP mode.

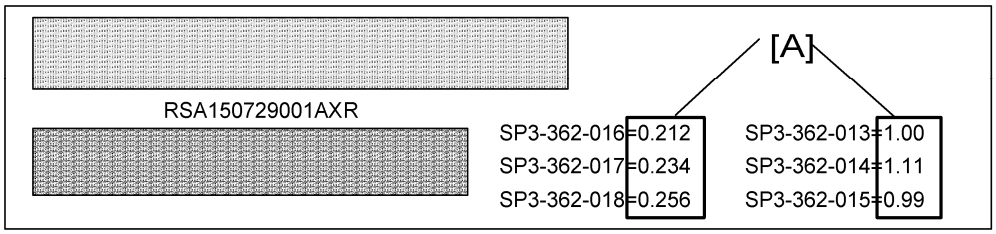

## 4.9.5 TEMPERATURE AND HUMIDITY SENSOR

1. Rear cover (☛p.4-15 "Rear Cover")
2. Right rear cover (☛p.4-15 "Right Rear Cover")

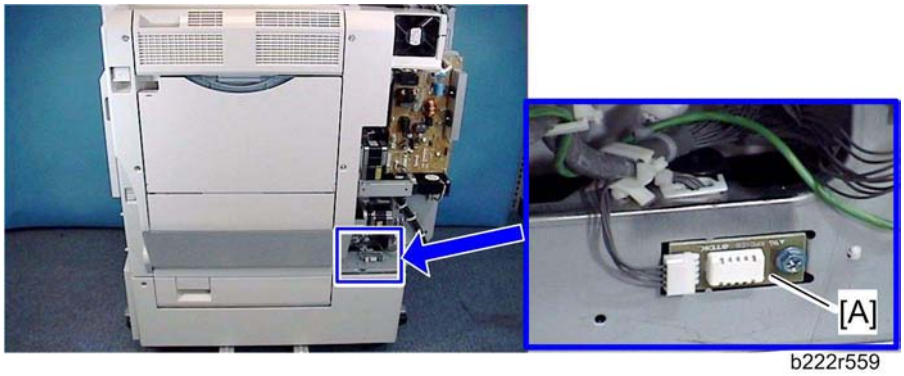


3. Temperature and humidity sensor [A] (🖉 x 1, 🖗 x 1)

# 4.10 DRIVE UNIT

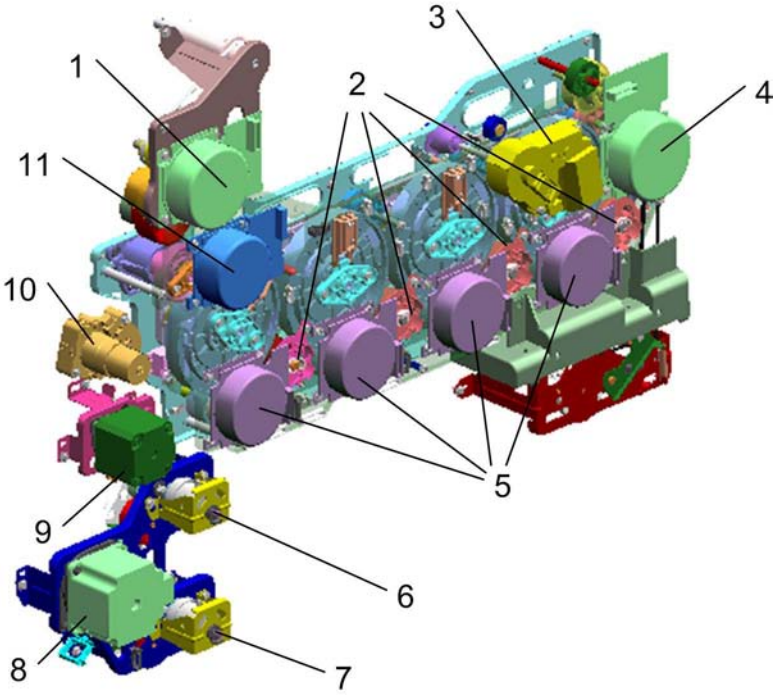


The drawing above shows the drive unit layout.

| | |
|---|---|
| 1. Fusing/paper exit motor<br>2. Development clutches<br>3. Image transfer belt contact motor<br>4. Toner transport motor<br>5. Drum/Development drive motors<br>6. Paper feed clutch – Tray 1 | 7. Paper feed clutch – Tray 2<br>8. Paper feed motor<br>9. Registration motor<br>10. Paper transfer contact motor<br>11. ITB drive motor |

There are some motors and clutches that are not shown in the above drawing:

| | |
|---|---|
| ▪ Tray lift motor 1 and 2<br>▪ Duplex inverter motor<br>▪ Duplex/By-pass Motor | ▪ Junction gate 1 motor<br>▪ Shutter motor<br>▪ By-pass clutch |

## 4.10.1 GEAR UNIT

1. All PCU's (☛ “p.4-41”)
2. Image transfer belt unit (☛ "p.4-55")
3. Rear cover (☛ "p.4-15")
4. Open the controller box (☛ "p.4-122")
5. Third duct (☛ "p.4-48")
6. Left cover (☛ "p.4-15")
7. PSU bracket (☛ "p.4-126")

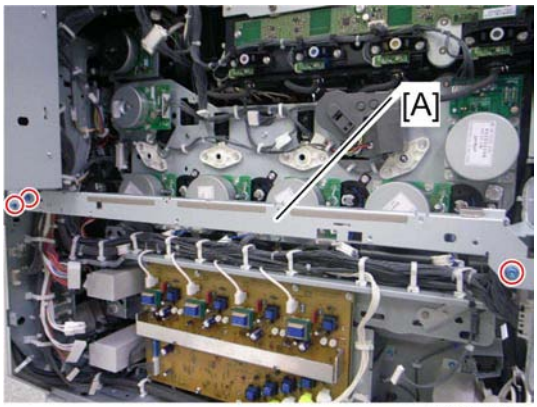


d027r148

8. Remove the rear stay [A] (🔩 x 3).

d027r149

9. Remove three clamps (red arrows) and release seven clamps (blue arrows).

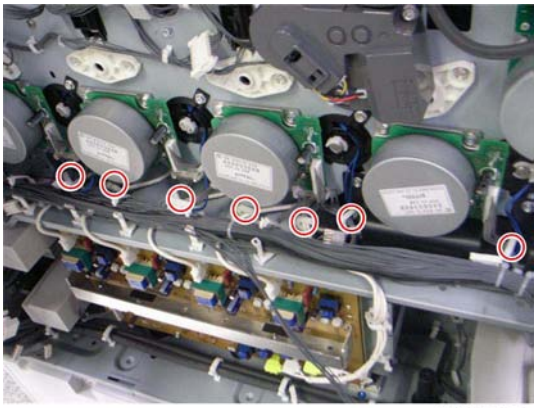

d027r150

10. Release seven clamps and turn each harness aside.

d027r151

11. Disconnect four connectors (red arrows).

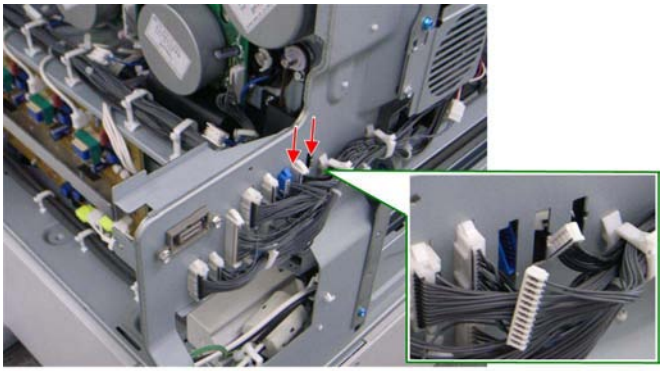

d027r152

12. Disconnect two connectors (red arrows) and put these harnesses inside the machine.

Drive Unit

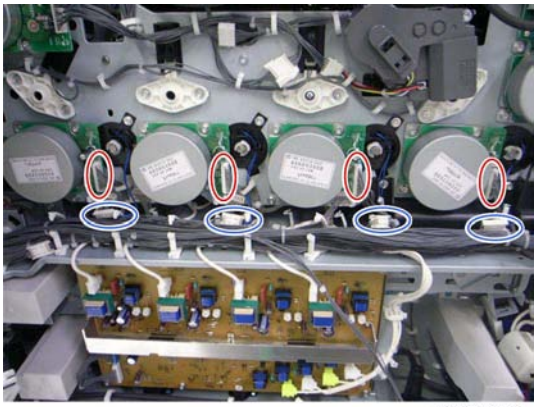

d027r153

13. Disconnect each connector (red circles) from the drum/development drive motors (☞ x 1, ☜ x 1 each).
14. Disconnect each connector (blue circles) from the development clutches (☞ x 1 each).

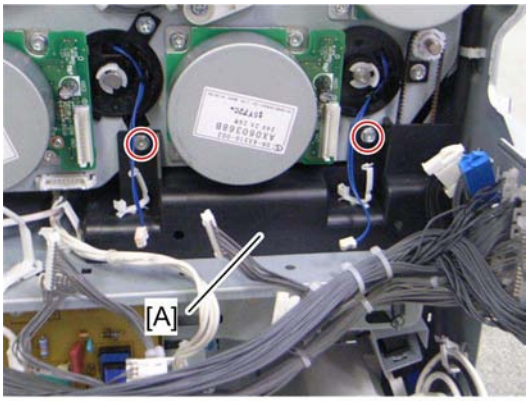


d027r155

15. Cover [A] (✐ x 2)

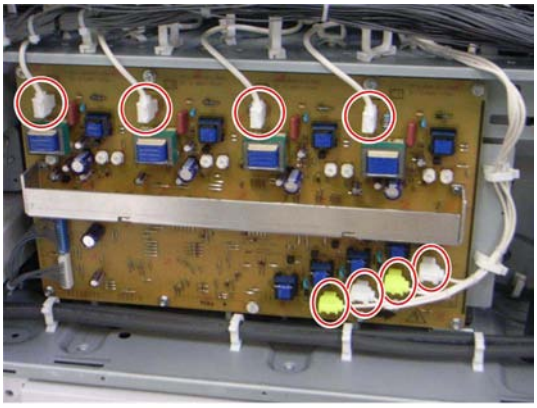

d027r156

16. Disconnect eight connectors from the high voltage supply board (☞ x 8, ☜ x 2).

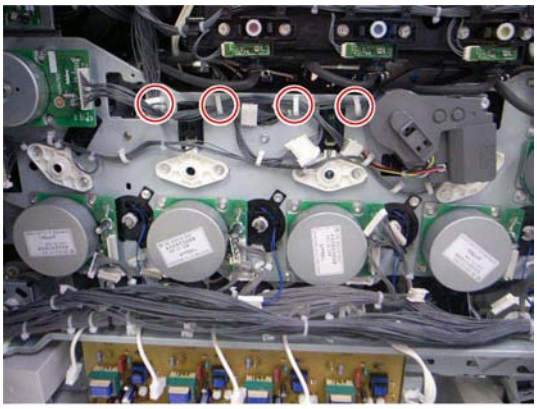

d027r157b

17. Release four clamps (red circles) and turn the harnesses aside.

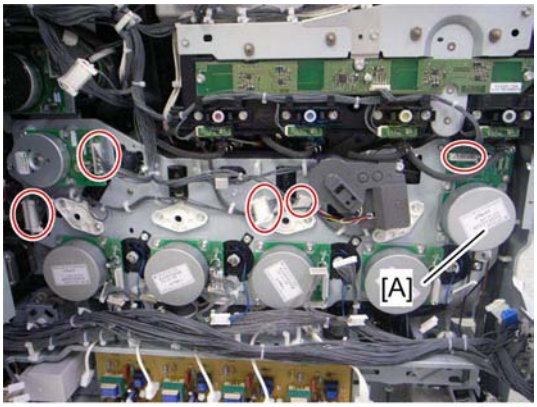


d027r158

18. Disconnect five connectors (red circles) (☞ x 5).
19. Toner transport motor [A] (✐ x 3)

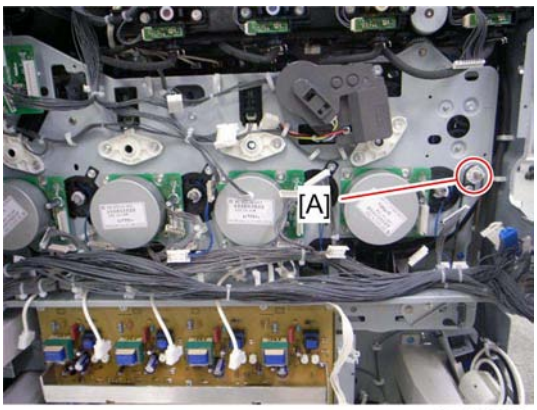


d027r159

20. Pulley [A] (timing belt)

Drive Unit

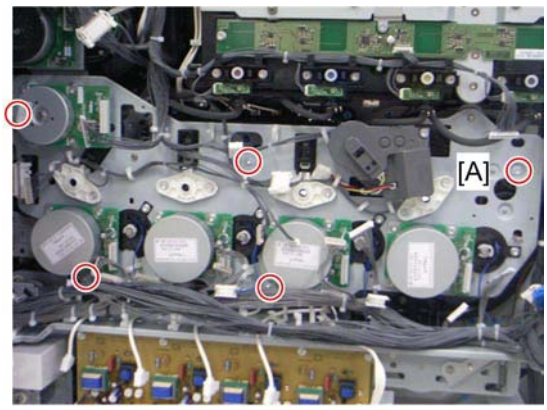


d027r160a

21. Gear unit [A] (🔩 x 8)

### *When installing the drive unit*

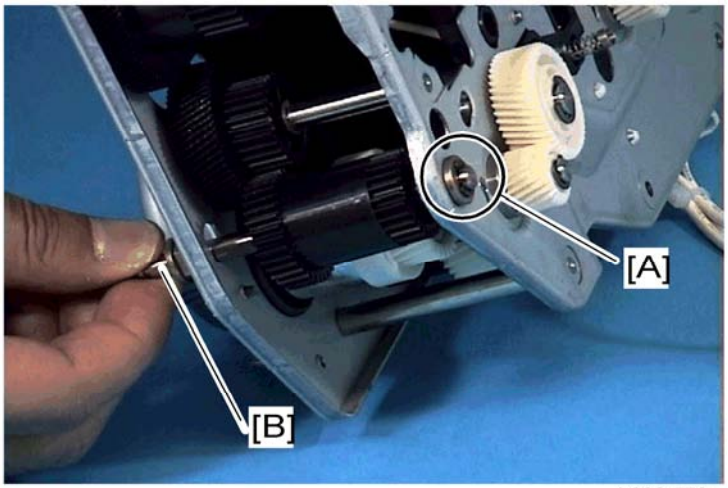


b222r573

Make sure that the bushing [A] is fully set in the frame of the gear unit before installing the timing belt and pulley to the shaft [B].

### *Adjustment after replacing the gear unit*

Do the following procedures after replacing the gear unit.

1. Turn on the main power switch.
2. Enter "Copy SP" in the SP mode.
3. Do "Amplitude Control" with SP1-902-001.
4. Check the result of the Amplitude Control with SP1-902-002.

   0: Success, 1: Failure due to no sampling data,

   2: Failure due to insufficient number of pattern detections

   When the result of this adjustment is "1" or "2":

- Check that all the PCUs are correctly set and that the image transfer belt unit is correctly set.
- Do "Amplitude Control" again after checking the PCUs and image transfer belt unit.

When the result is still "1" or "2" after checking the PCUs and image transfer belt unit:

- Check that the gear unit is installed correctly.

5. Exit the SP mode.

## 4.10.2 REGISTRATION MOTOR

1. Rear cover (☛ "p.4-15")
2. Right rear cover (☛ "p.4-15")
3. Ventilation duct (☛ "p.4-126")
4. Turn the harnesses aside (☜ x 5)

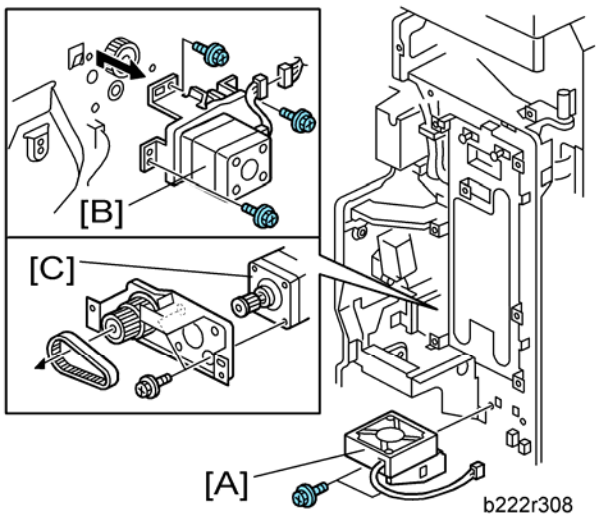


5. Fusing power supply board fan bracket [A] (☞ x 2, ☞ x 1)
6. Registration motor assembly [B] (☞ x 3, ☞ x 1)
7. Registration motor [C] (☞ x 2, timing belt)

## 4.10.3 PAPER FEED MOTOR

1. Rear cover (☛ "p.4-15")
2. Right rear cover (☛ "p.4-15")

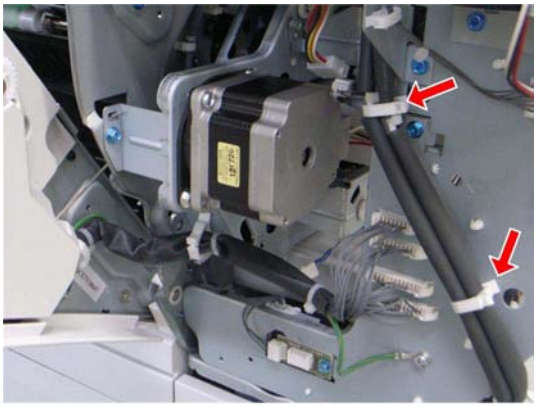

d027r161

3. Release the two clamps.

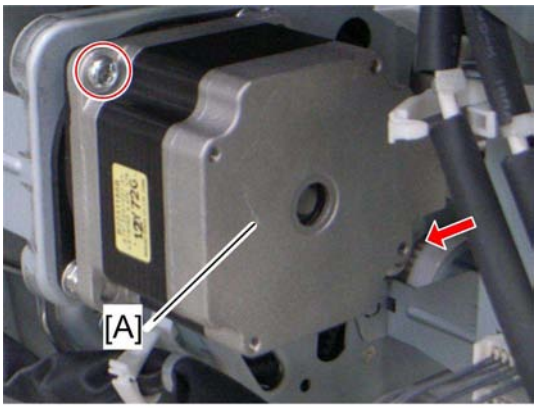


d027r162a

4. Paper feed motor [A] (☞ x 1, ☞ x 2, timing belt)

## 4.10.4 DRUM/DEVELOPMENT MOTORS FOR M, C, AND Y

1. Rear cover (☛ "p.4-15")
2. PSU bracket (☛ "p.4-126")
3. Open the controller box.

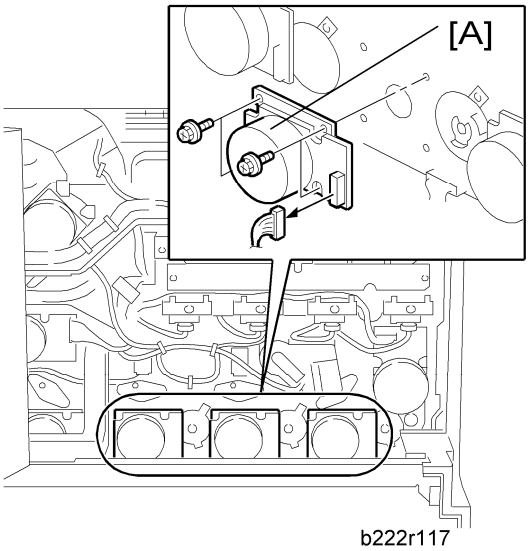


4. Drum/Development motors (three motors, one each for MCY) [A] (🔩 x 4, 🔌 x 1 each)

## 4.10.5 DRUM/DEVELOPMENT MOTOR-K

1. Rear cover (☛ "p.4-15")
2. PSU bracket (☛ "p.4-126")
3. Open the controller box (☛ "p.4-122")

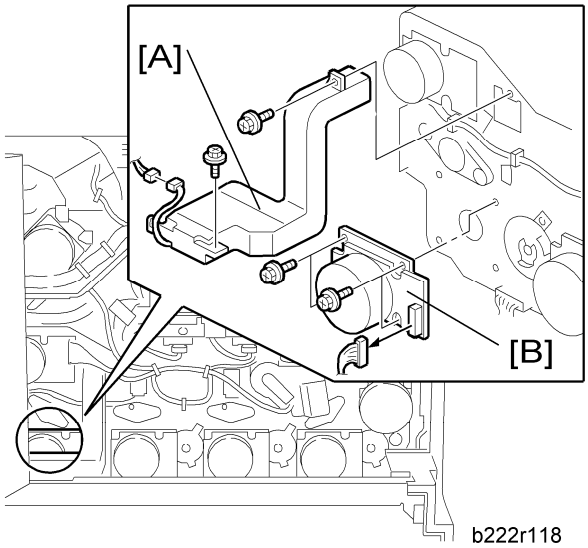


4. Third duct [A] (☞ x 2, ☞ x 1)
5. Drum/Development motor-K [B] (☞ x 4, ☞ x 1)

## 4.10.6 ITB DRIVE MOTOR

1. Rear cover (☛ "p.4-15")
2. Open the controller box (☛ "p.4-122")

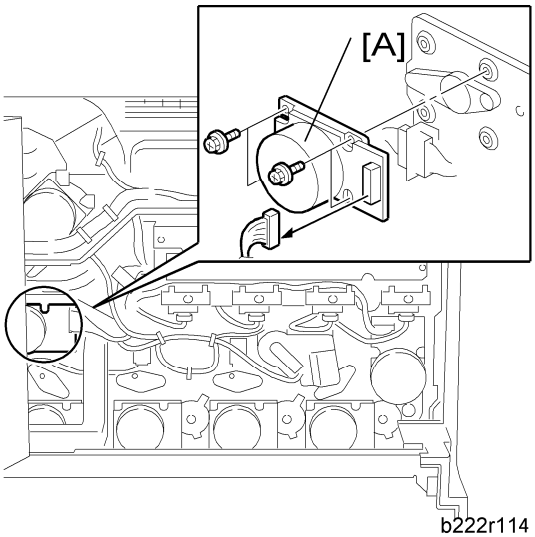


3. ITB drive motor [A] (☞ x 4, ☞ x 1)

## 4.10.7 FUSING/PAPER EXIT MOTOR

1. Rear cover (☛ "p.4-15")
2. Open the controller box (☛ "p.4-122")

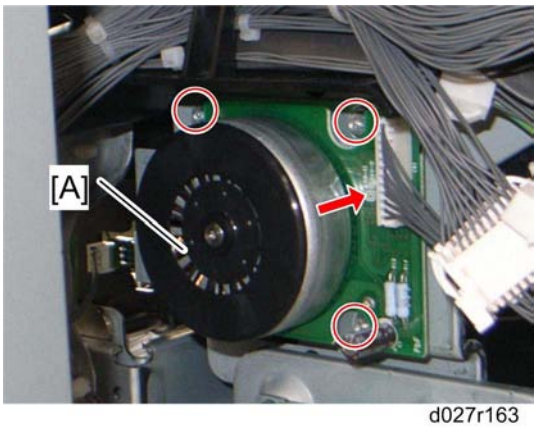


d027r163

3. Fusing/paper exit motor [A] (🔩 x 3, 🖐 x 1)

## 4.10.8 IMAGE TRANSFER BELT CONTACT MOTOR

1. Rear cover (☛ "p.4-15")
2. Open the controller box. (☛ "p.4-122")

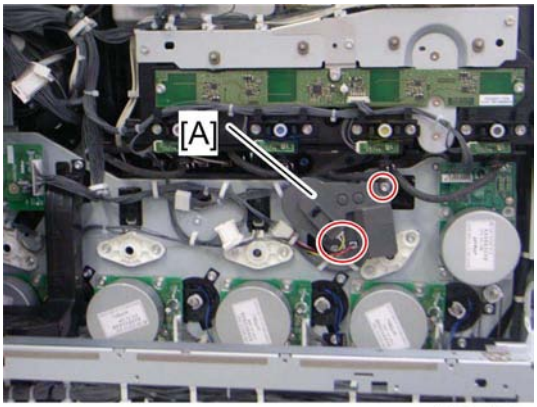


d027r164

3. Transfer belt contact motor [A] (🔩 x 2, 🖐 x 2)

## 4.10.9 PAPER TRANSFER CONTACT MOTOR

1. Rear cover (☛ "p.4-15")
2. Right rear cover (☛ "p.4-15")
3. Open the controller box (☛ “p.4-122”)
4. Duplex/by-pass motor bracket (☛ “p.4-79”)

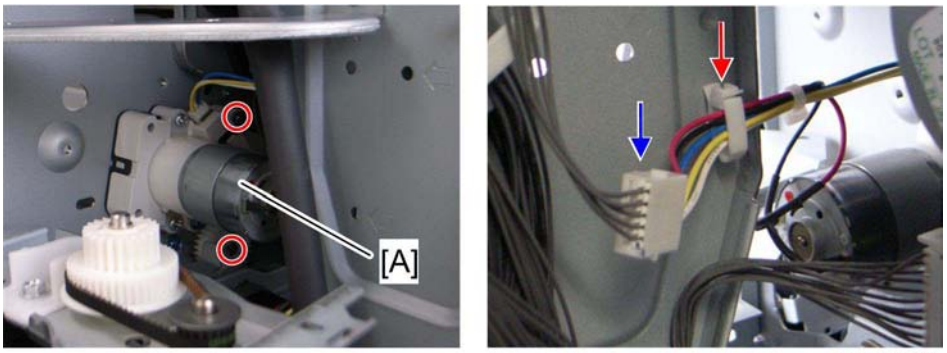


d023r726

5. Paper transfer contact motor [A] (🔧 x 2, 🔌 x 1, 🔌 x 1)

Note

- The picture below shows how to use the screwdriver to remove the screws of the paper transfer contact motor.

d023r727

## 4.10.10 DUPLEX INVERTER MOTOR

1. Open the right door.
2. Right door cover, right door rear cover (☛ "p.4-107")

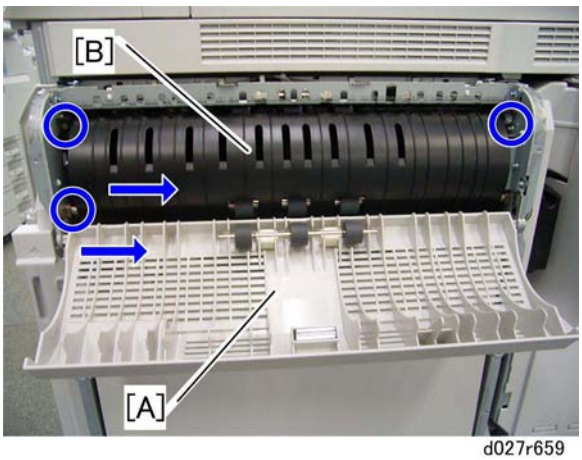

d027r659

3. Duplex door [A] (2 hooks)
4. Duplex guide plate [B] (🔩 x 3, 2 hooks)

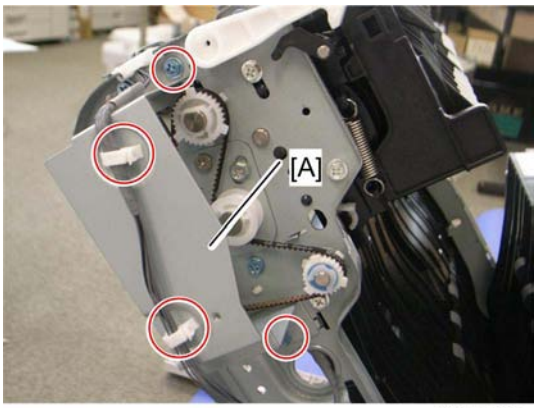

d027r166

5. Duplex inverter motor bracket cover [A] (🔩 x 2, x 2)

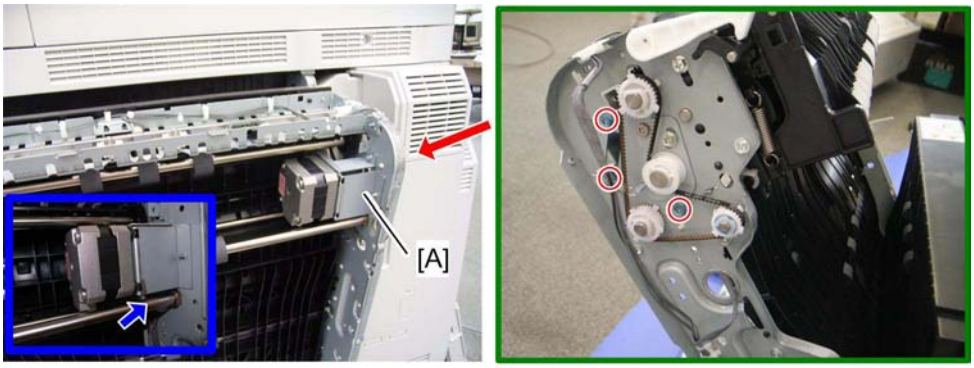

d027r660b

6. Duplex inverter motor bracket [A] (🔩 x 3, x 1, x 1)

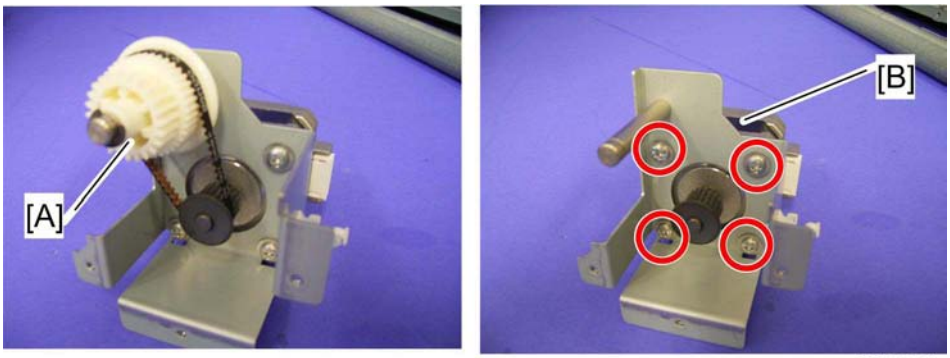


d027r661

7. Gear [A] (ℂ x 1, belt x 1)
8. Duplex inverter motor [B] (🔩 x 4)

## 4.10.11 DUPLEX/BY-PASS MOTOR

1. Rear cover (☛ "p.4-15")
2. Right rear cover (☛ "p.4-15")
3. Open the controller box (☛ "p.4-122").

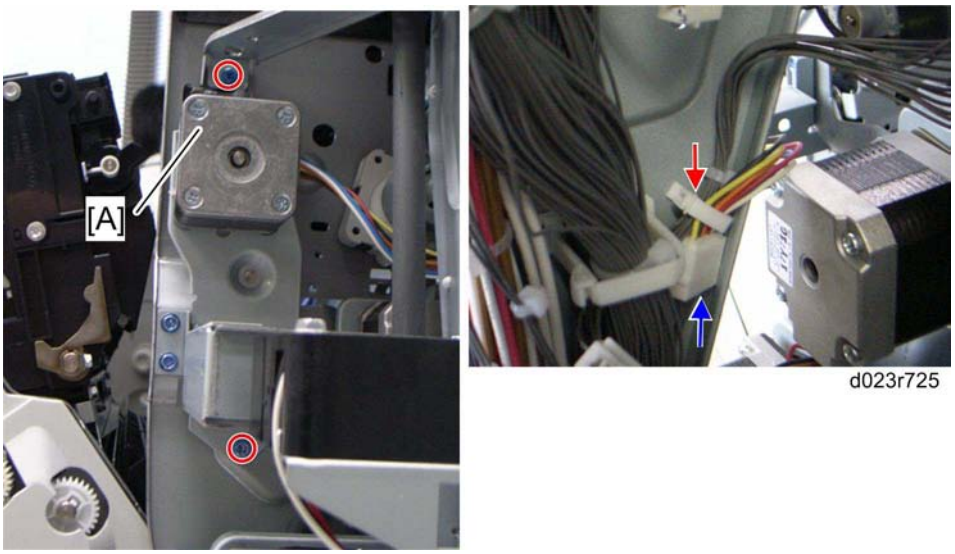


4. Duplex/by-pass motor bracket [A] (🔩 x 2, x 1, x 1)

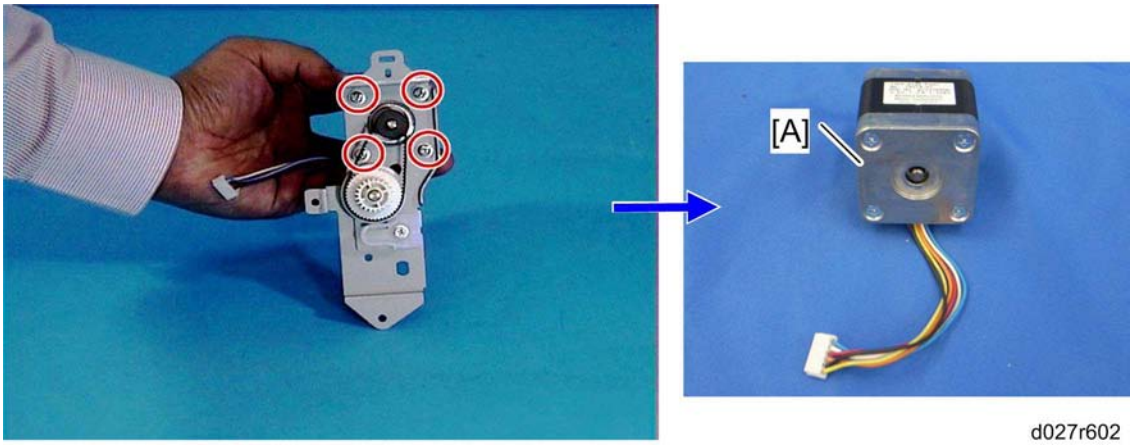


5. Duplex/by-pass motor [A] (🔩 x 4, belt x 1)

## 4.10.12 TONER TRANSPORT MOTOR

1. Rear cover (☛ "p.4-15")
2. Open the controller box (☛ "p.4-122")

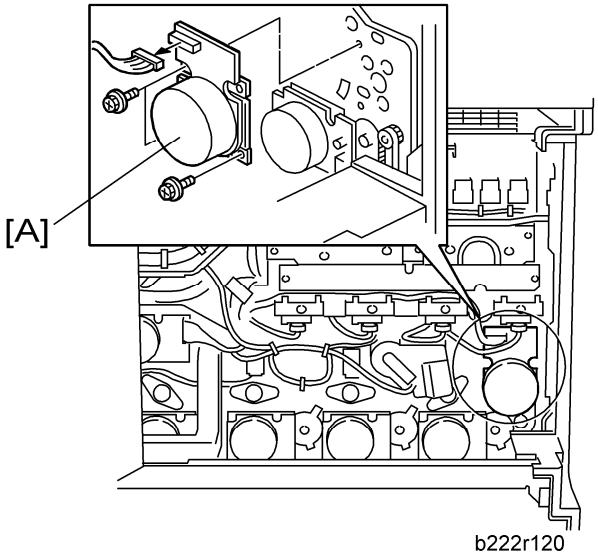


3. Toner transport motor [A] (🔩 x 3, 🔌 x 1)

## 4.10.13 TONER COLLECTION UNIT

1. Gear Unit (☛ "p.4-68")

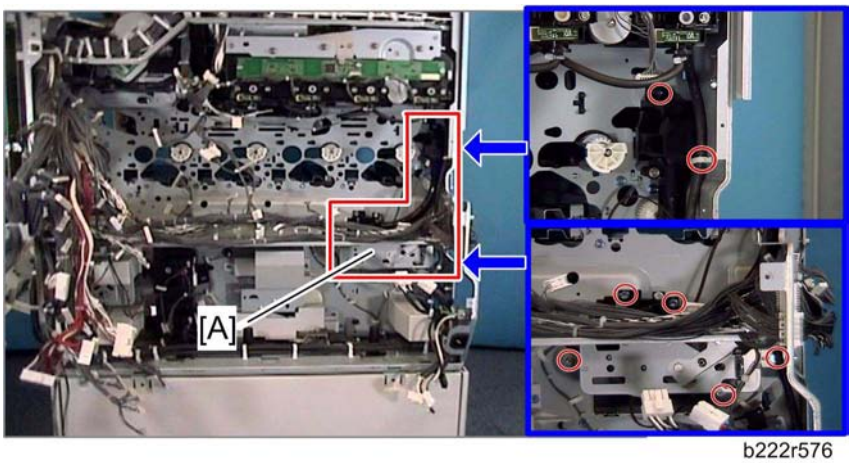


b222r576

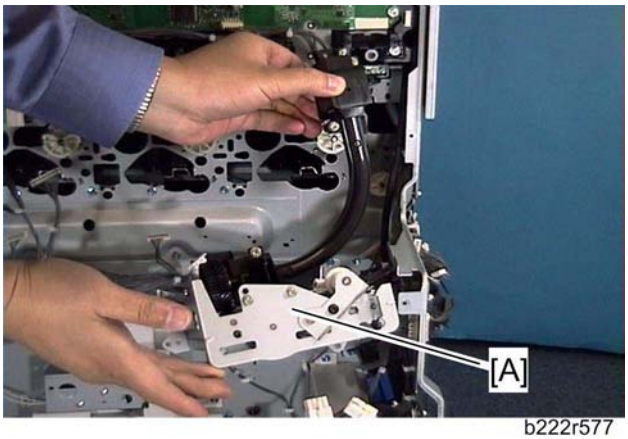


b222r577

2. Toner collection unit [A] (🔩 x 6, 🔌 x 1)

## 4.10.14 PAPER FEED CLUTCHES

1. Rear cover (☛ "p.4-15")
2. PSU bracket (☛ "p.4-126")

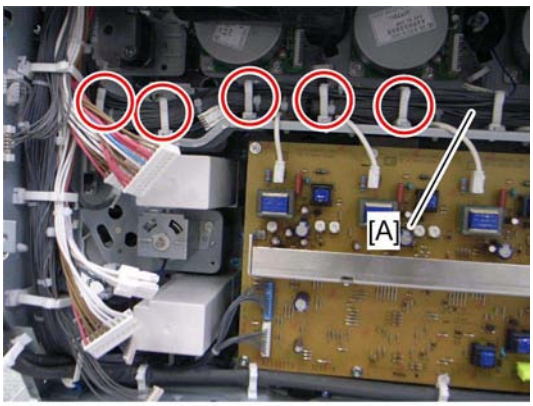


d027r578

3. Release five clamps, and then turn the harness [A] aside.

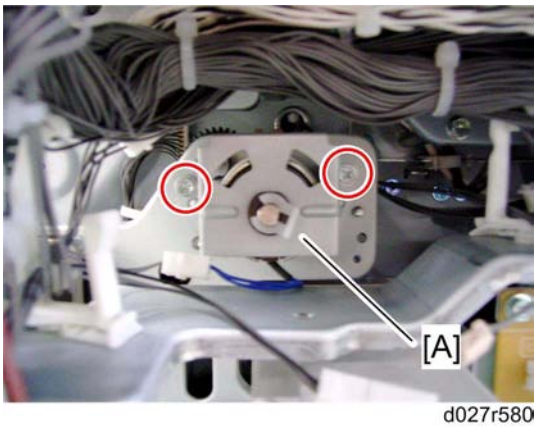


d027r580

4. Paper feed clutch 1 bracket [A] (x 2, x 1, x 1, x 1)

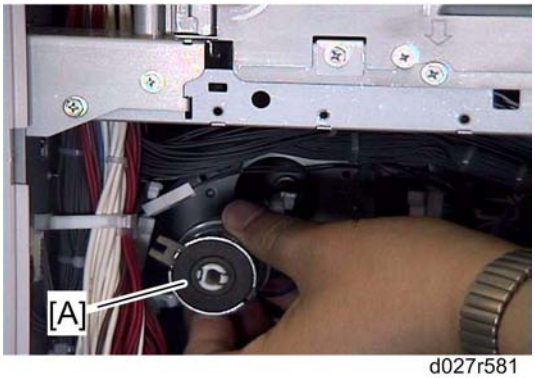


d027r581

5. Paper feed clutch 1 [A]

Drive Unit

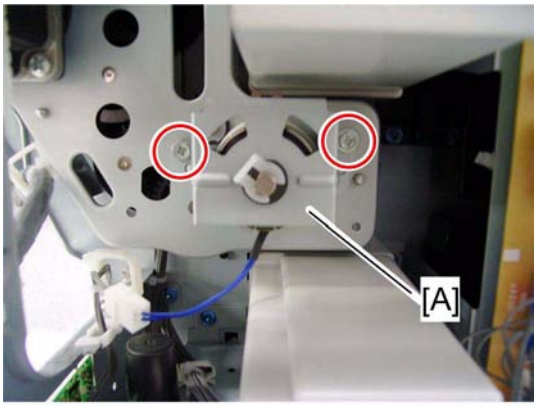


d027r582

6. Paper feed clutch 2 bracket [A] (x 2, x 1, x 1)

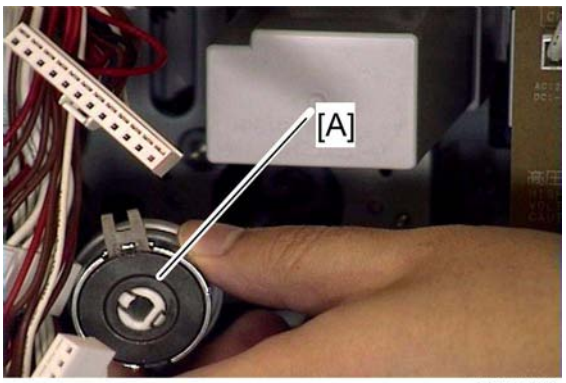


d027r583

7. Paper feed clutch 2 [A]

## 4.10.15 DEVELOPMENT CLUTCH-Y

1. Rear cover (☛ "p.4-15")
2. PSU bracket (☛ "p.4-126")
3. Open the controller box. (☛ "p.4-122").
4. Drum/development motor-Y (☛ "p.4-74")

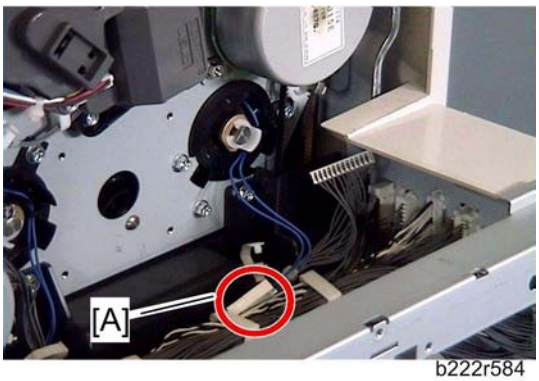

b222r584

5. Disconnect the connector [A] (✋ x 1).

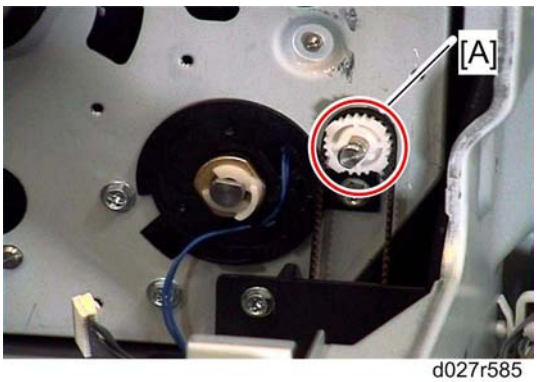

d027r585

6. Remove the pulley and bushing [A].

Drive Unit

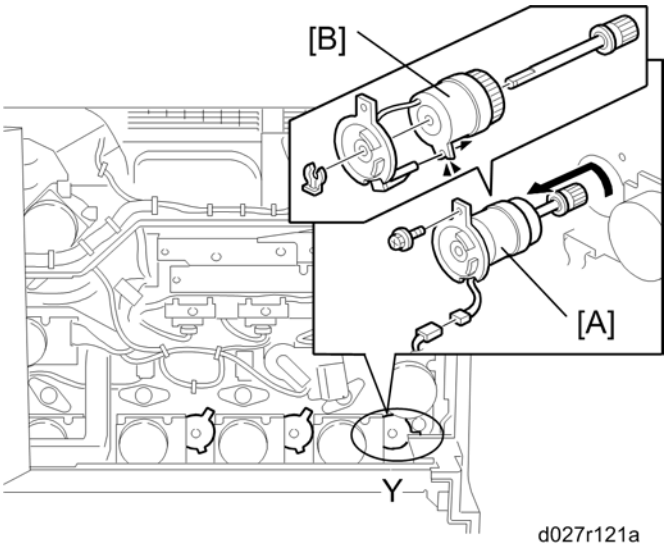


7. Turn the development clutch unit [A] counter-clockwise and then pull it out (🔩 x 1).
8. Development clutch-Y [B] (🗜 x 1)

## 4.10.16 DEVELOPMENT CLUTCHES FOR M AND C

1. Rear cover (☛ "p.4-15")
2. PSU bracket (☛ "p.4-126")
3. Open the controller box. (☛ "p.4-122").
4. Drum/development motors for M and C (☛ "p.4-74")
5. Disconnect the connector for each development clutch (x 1).

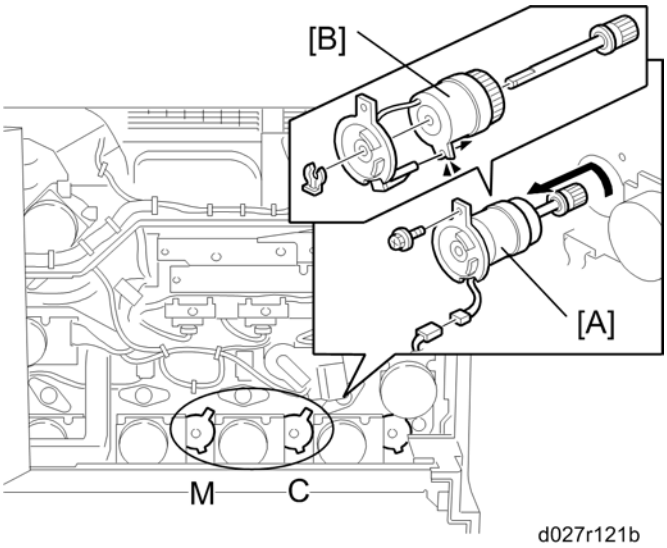


6. Turn the development clutch unit [A] counter-clockwise and then pull it out (x 1).
7. Development clutches for M and C [B] (x 1)

## 4.10.17 DEVELOPMENT CLUTCH-K

1. Rear cover (☛ "p.4-15")
2. PSU bracket (☛ "p.4-126")
3. Open the controller box. (☛ "p.4-122")
4. Drum/development motor-K (☛ "p.4-75")

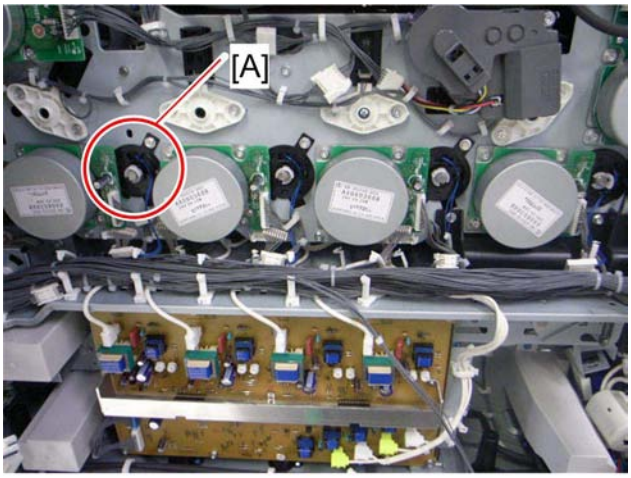


d027r586

5. Turn the development clutch unit [A] counter-clockwise and then pull it out (☞ x 1).

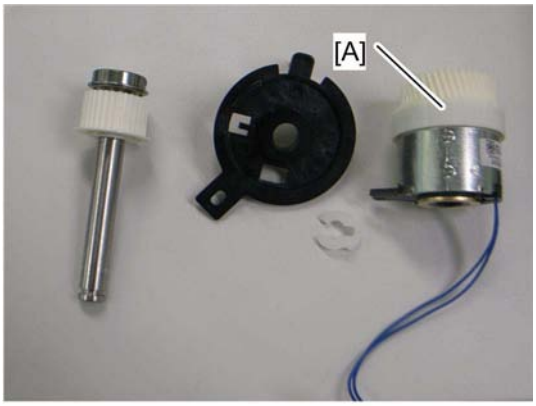


d027r167

6. Development clutch-K [A] (☜ x 1)

# 4.11 FUSING

## 4.11.1 PM PARTS

| PM Parts | Replacement Procedure |
|---|---|
| Heating Roller | ☛ p.4-95 "Heating, Fusing and Tension Roller" |
| -Bearing | ☛ p.4-91 "Fusing Belt and Pressure Roller" |
| -Insulating Bushing | ☛ p.4-91 "Fusing Belt and Pressure Roller" |
| Fusing Belt | ☛ p.4-91 "Fusing Belt and Pressure Roller" |
| Fusing Roller | ☛ p.4-95 "Heating, Fusing and Tension Roller" |
| -Bearing | ☛ p.4-95 "Heating, Fusing and Tension Roller" |
| Pressure Roller | ☛ p.4-91 "Fusing Belt and Pressure Roller" |
| -Bearing | ☛ p.4-98 "Pressure Roller Bearing" |
| Heating Roller Thermistor | ☛ p.4-96 "Heating Roller Thermistor" |
| Pressure Roller Thermistor | ☛ p.4-97 "Pressure Roller Thermistor and Thermostat" |
| Lower Cover | |
| Stripper Plate | ☛ p.4-91 "Fusing Belt and Pressure Roller" |
| Entrance Guide Plate | |
| Exit Guide Plate | |
| Thermopile | ☛ p.4-100 "Thermopile" |

## 4.11.2 FUSING UNIT

**CAUTION**

- Turn off the main switch and wait until the fusing unit cools down before beginning any of the procedures in this section. The fusing unit can cause serious burns.

1. If you will install a lot of new parts in the fusing unit (at PM for example), then set SP 3902-014 to "1".

   Note

   - If you do this, then the machine will reset the PM counter for the fusing unit automatically, after you turn the power on again.
     Do not do this if you replace the complete fusing unit. This is because the fusing unit has a new detection mechanism.
2. Turn off the main power switch.
3. Open the right door.

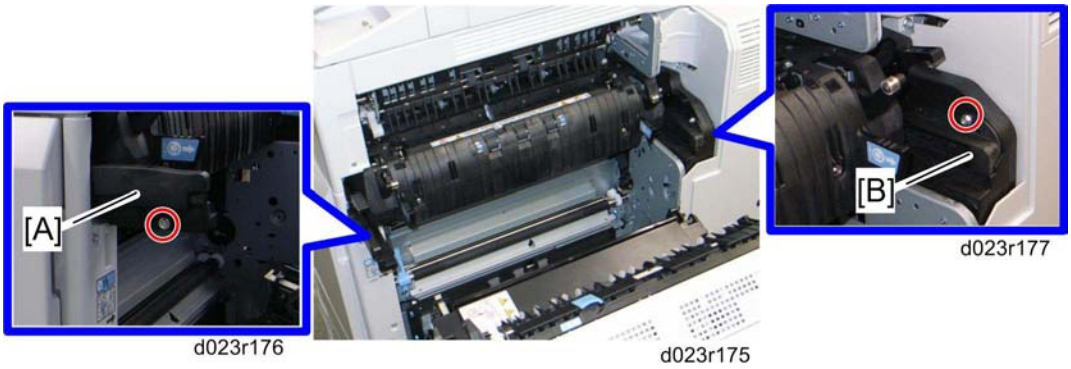


4. Front fusing stopper [A] (🔩 x 1)
5. Rear fusing stopper [B] (🔩 x 1)

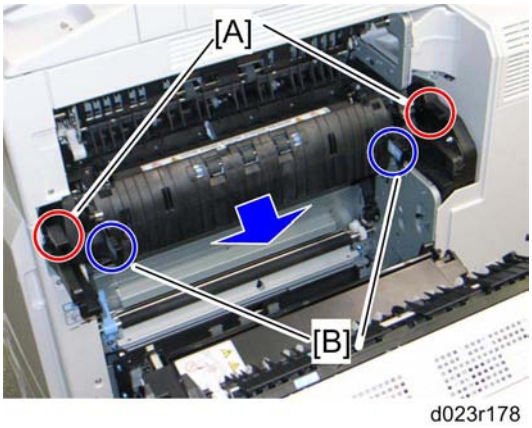


6. Release the lock levers [A].
7. Hold the fusing unit handles [B], and then pull out the fusing unit.

## 4.11.3 PRESSURE ROLLER LAMP

1. Fusing unit (☛p.4-87 "Fusing Unit")

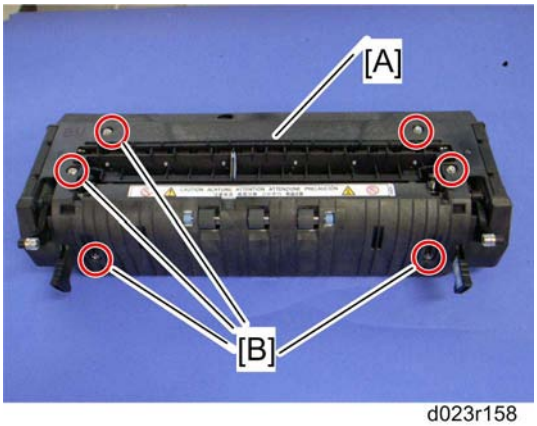

d023r158

2. Fusing upper cover [A] (🖉 x 6)

Note

- These are four stepped screws [B] on the fusing upper cover.

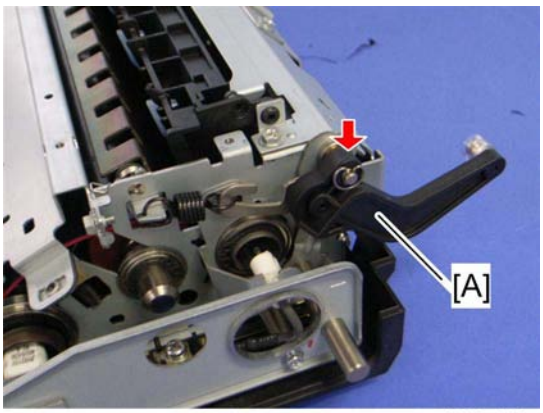

d023r159

3. Lock lever front and rear [A] (snap ring x 1, spring x 1 each)

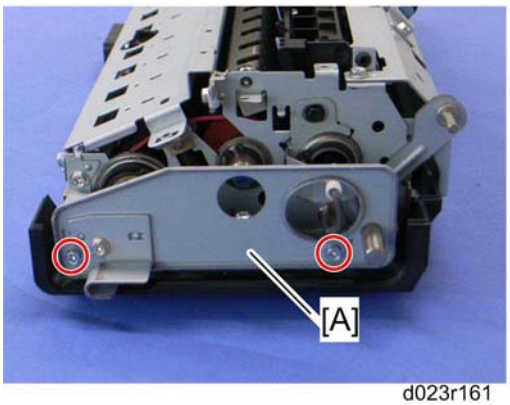

d023r161

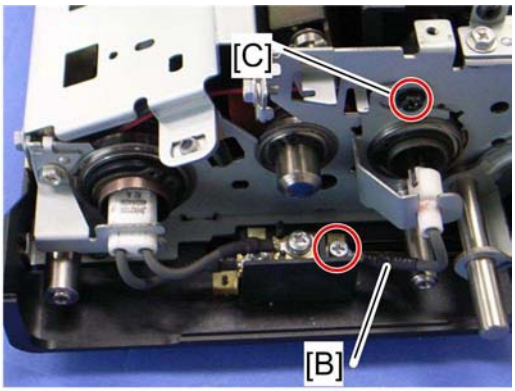

d023r179

4. Front side stay [A] (🖉 x 2)
5. Pressure roller lamp cable [B] (🖉 x 1)
6. Front pressure roller lamp stay [C] (🖉 x 1)

Fusing

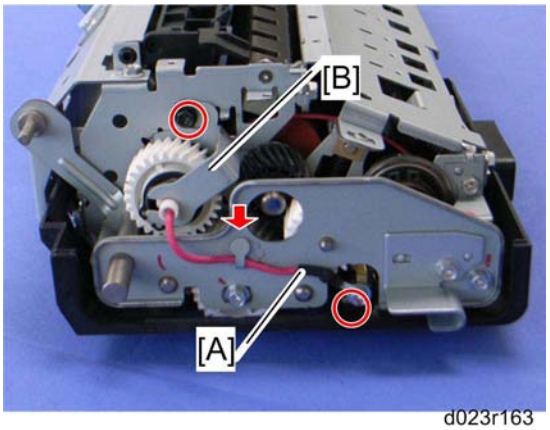

d023r163

7. Release the pressure roller lamp cord [A] (🔩 x 1).

Note

- The color of the fusing lamp cord differs depending on the destination.
- **Red**: 220 - 240 V, **Blue**: 120 V

8. Rear pressure roller lamp stay [B] (🔩 x 1)

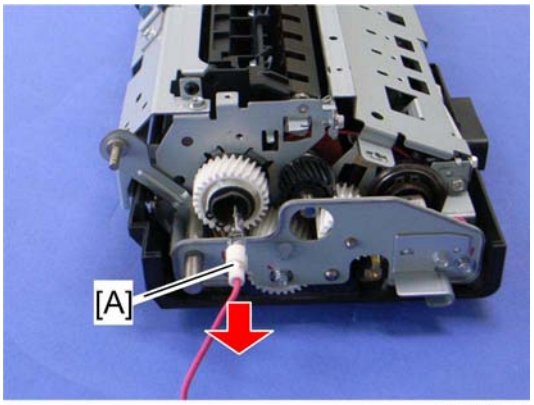

d023r180

9. Pressure roller lamp [A]

## 4.11.4 FUSING LAMP

1. Fusing unit (☛p.4-87 "Fusing Unit")
2. Front side stay (☛p.4-88 "Pressure Roller Lamp")

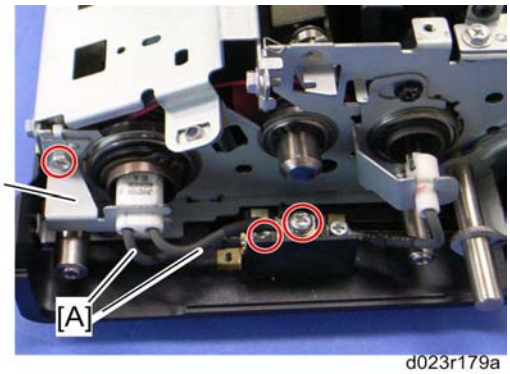

d023r179a

3. Release the fusing lamp cords [A] at the front side (☞ x 2).
4. Front fusing lamp stay [B] (☞ x 1)

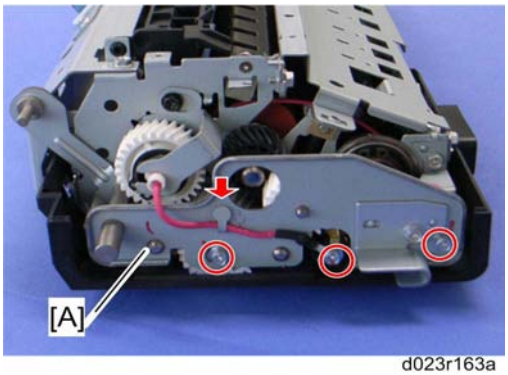

d023r163a

5. Rear side stay [A] (☞ x 3)

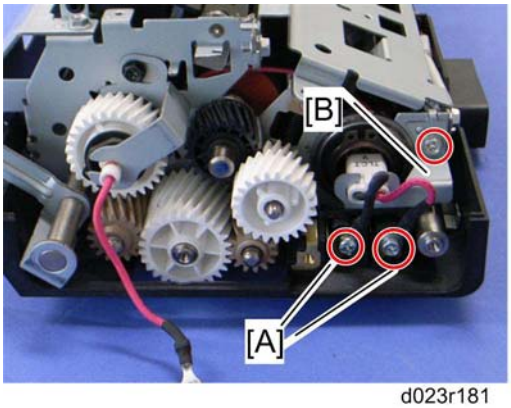

d023r181

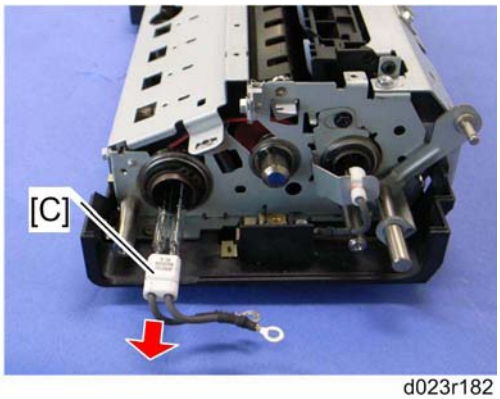

d023r182

6. Release the fusing lamp cords [A] at the rear side (☞ x 2).
7. Rear fusing lamp stay [B] (☞ x 1)
8. Fusing lamp [C]

## 4.11.5 FUSING BELT AND PRESSURE ROLLER

1. Fusing unit (☛p.4-87 "Fusing Unit")
2. Fusing upper cover (☛p.4-88 "Pressure Roller Lamp")

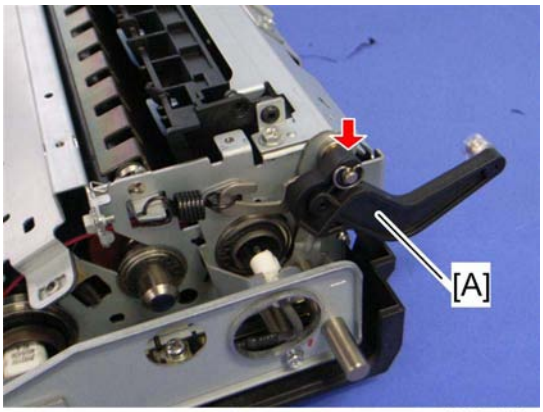


d023r159

3. Lock lever front and rear [A] (snap ring x 1, spring x 1 each)

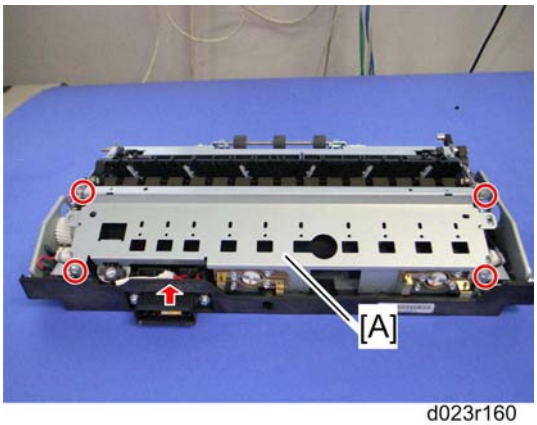


d023r160

4. Top frame [A] (🔩 x 4, ✋ x 1)
5. Pressure roller lamp (☛p.4-88 "Pressure Roller Lamp")
6. Fusing lamp (☛p.4-90 "Fusing Lamp")

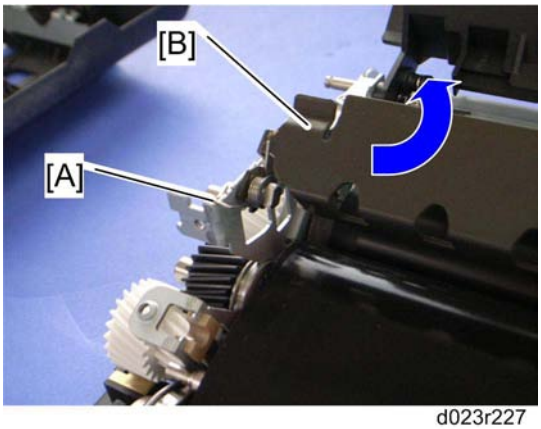


d023r227

7. Release the springs [A] at the front and rear side.

8. Stripper plate [B]

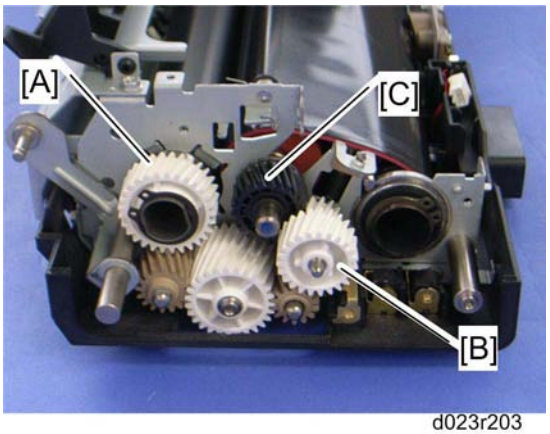

d023r203

9. Remove the pressure roller gear [A] (C-ring x 1), idle gear [B] and one-way clutch gear [C] (C-ring).

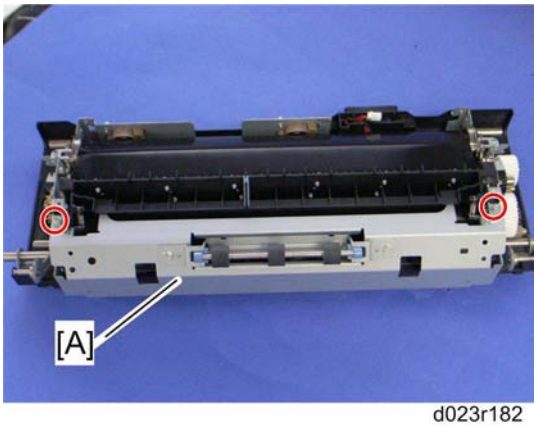

d023r182

10. Top right frame [A] (☞ x 2)

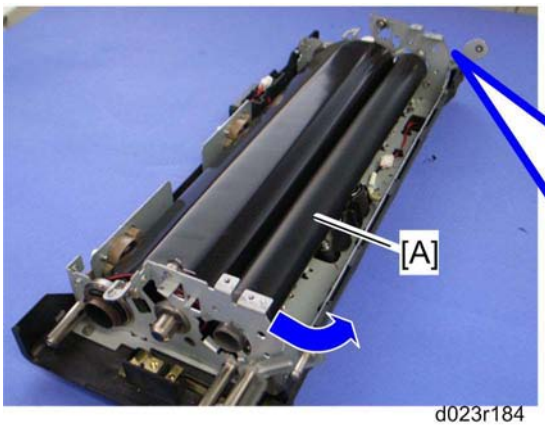

d023r184

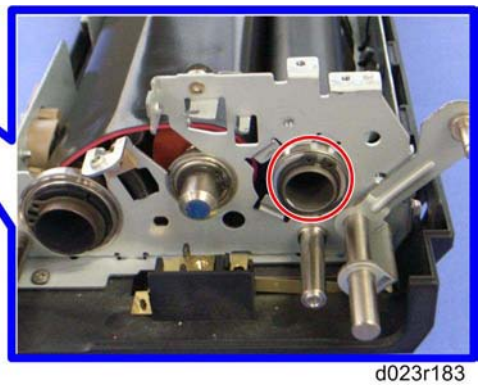
d023r183

11. Pressure roller [A] (C-ring x 1, bearing x 2)

Fusing

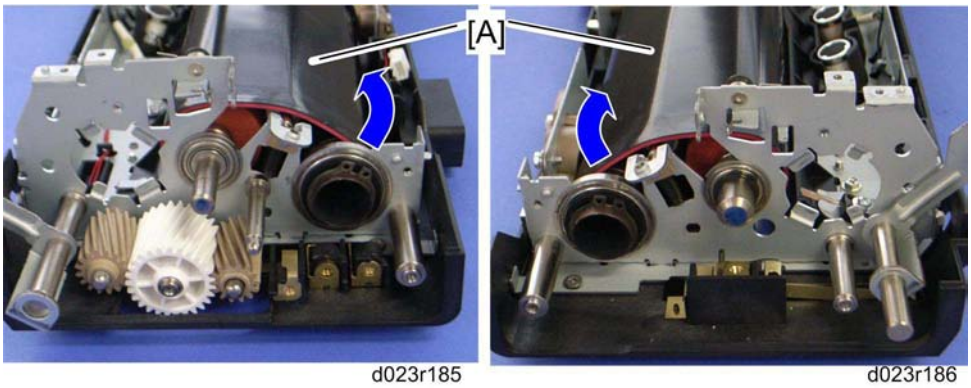


12. Fusing belt [A] with rollers (spring x 2, C-ring x 3, bearing x 4, insulating bushing x 2)

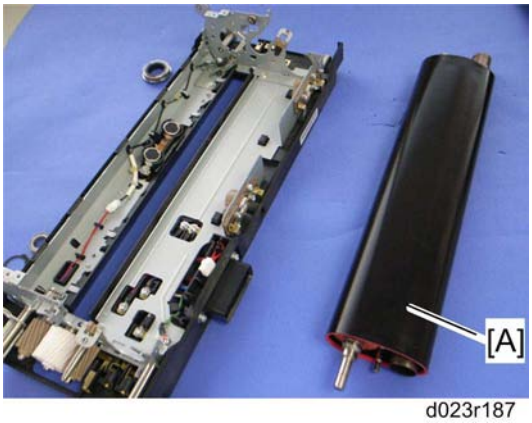


13. Fusing belt [A]

### *When reassembling the fusing unit*

When replacing the fusing roller or pressure roller, you have to apply lubricant to the following places.

**Fusing Roller**

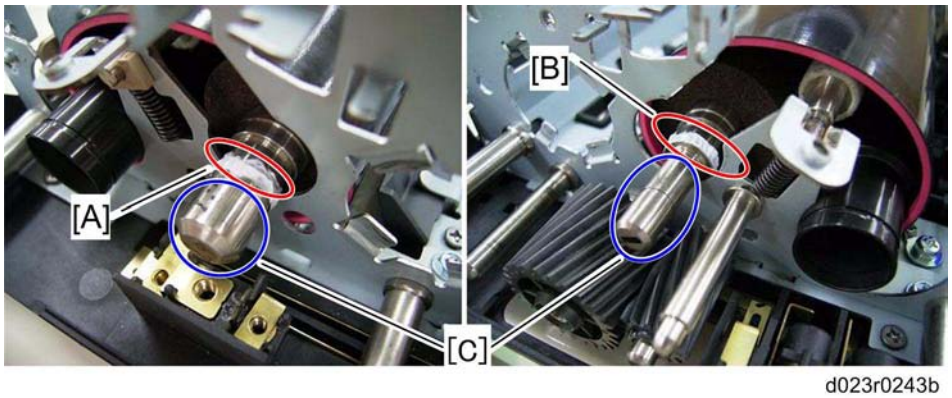


- Apply "Barrierta S552R" to the notch [A] at the front side of the fusing roller.
- Apply "Barrierta S552R" to the edge [B] of the step at the rear side of the fusing roller.

Note

- Do not apply lubricant to the area [C] as shown.

**Pressure Roller**

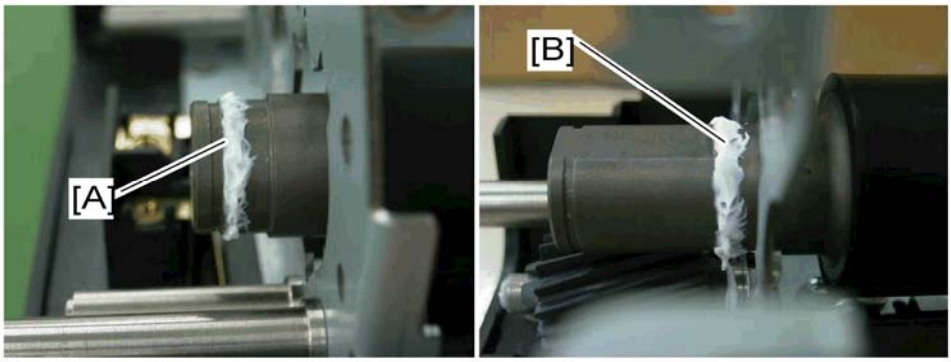


- Apply "Barrierta S552R" to the front edge [A] and rear edge [B] of the pressure roller as shown above.

## 4.11.6 HEATING, FUSING AND TENSION ROLLER

1. Fusing belt with rollers (☛p.4-91 "Fusing Belt and Pressure Roller")

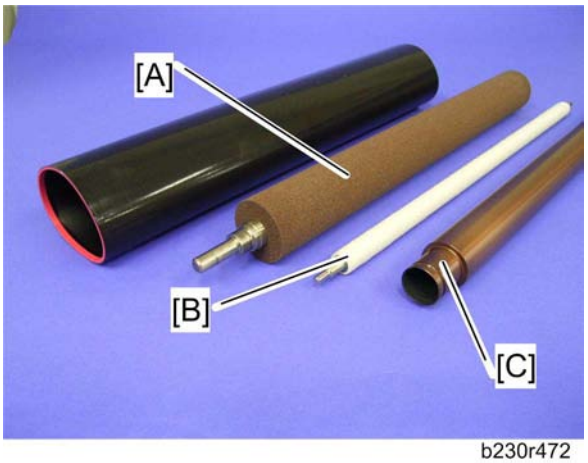


b230r472

2. Fusing roller [A]
3. Tension roller [B]
4. Heating roller [C]

## 4.11.7 HEATING ROLLER THERMOSTATS

1. Fusing upper cover (☛p.4-88 "Pressure Roller Lamp")

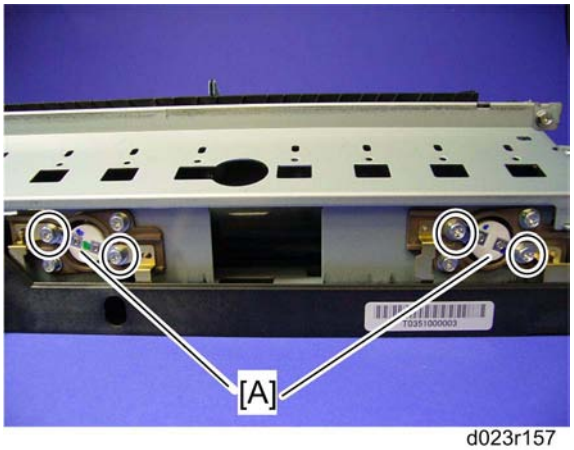


d023r157

2. Heating roller thermostats [A] (🔩 x 2 each)

Note

- Do not re-use a thermostat that is already opened. Safety is not guaranteed if you do this.

## 4.11.8 HEATING ROLLER THERMISTOR

1. Fusing upper cover (☛p.4-88 "Pressure Roller Lamp")
2. Top frame (☛p.4-91 "Fusing Belt and Pressure Roller")

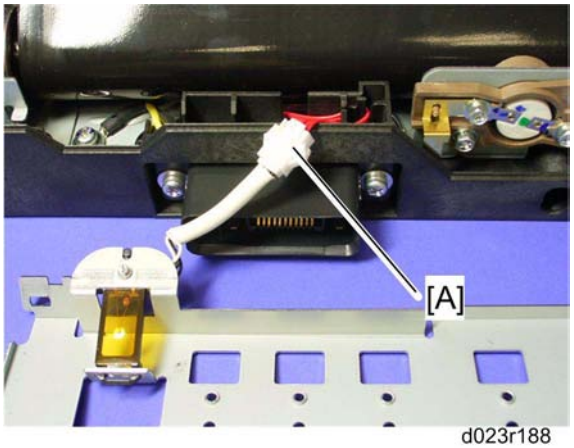


d023r188

3. Release the connector [A].

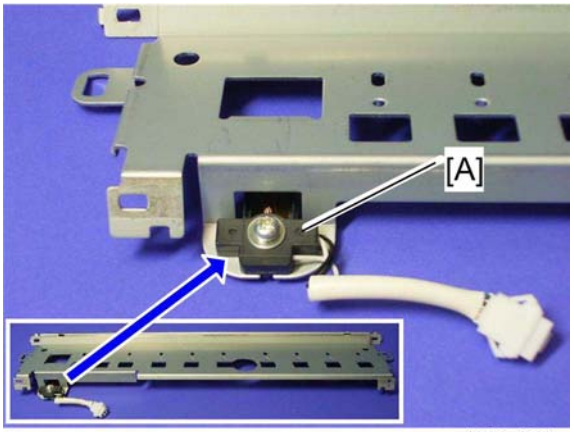


d023r189

4. Heating roller thermistor [A] (🔩 x 1)

## 4.11.9 PRESSURE ROLLER THERMISTOR AND THERMOSTAT

1. Fusing upper cover (☛p.4-88 "Pressure Roller Lamp")
2. Pressure roller (☛p.4-91 "Fusing Belt and Pressure Roller")

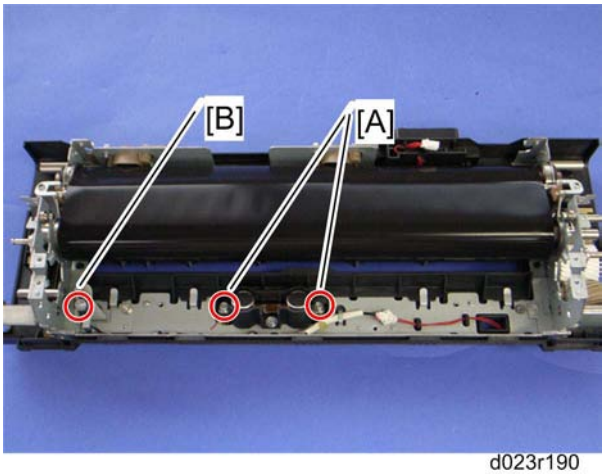


d023r190

3. Pressure roller thermostats [A](🔩 x 2)
4. Pressure roller thermistor [B] (🔩 x 1, ✋ x 1)

## 4.11.10 FUSING GEAR AND ONE-WAY CLUTCH

1. Fusing unit (☛ p.4-87)
2. Fusing upper cover (☛p.4-88 "Pressure Roller Lamp")
3. Rear side stay (☛p.4-90 "Fusing Lamp")

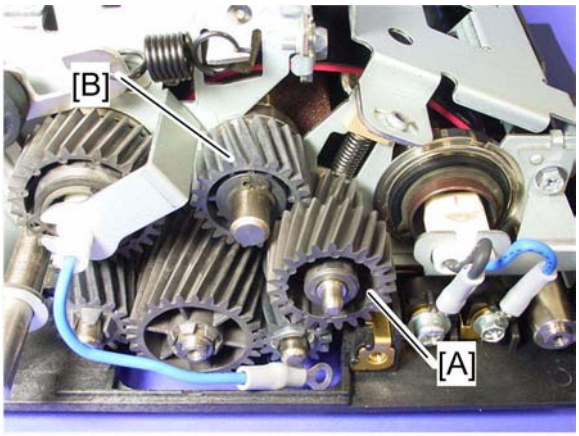


b230r308

4. Release the idle gear [A]
5. Release the One-way clutch gear [B] (C-ring x 1)

## 4.11.11 HEATING ROLLER BEARING AND INSULATING BUSHING

1. Fusing unit (☛p.4-87 "Fusing Unit")
2. Fusing upper cover (☛p.4-88 "Pressure Roller Lamp")
3. Rear side stay (☛p.4-90 "Fusing Lamp")
4. Front side stay (☛p.4-88 "Pressure Roller Lamp")
5. Fusing lamp (☛p.4-90 "Fusing Lamp")

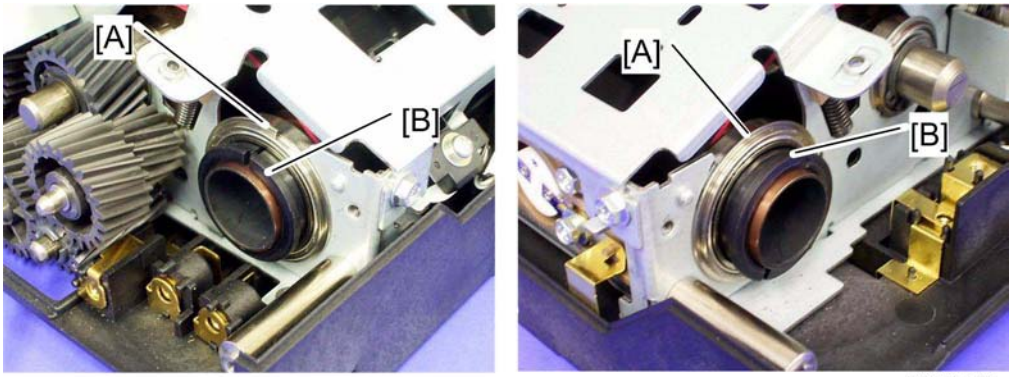


b230r441

6. Remove the rear and front heating roller bearings [A] and insulating bushings [B].

## 4.11.12 PRESSURE ROLLER BEARING

1. Fusing upper cover (☛p.4-88 "Pressure Roller Lamp")
2. Front side stay (☛p.4-88 "Pressure Roller Lamp")
3. Rear side stay (☛p.4-90 "Fusing Lamp")
4. Pressure roller lamp (☛p.4-88 "Pressure Roller Lamp")

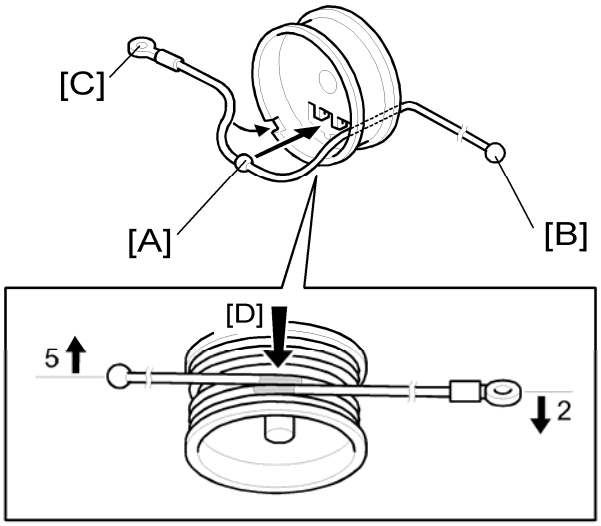


5. Pressure roller bearings [A] (front and rear)

## 4.11.13 FUSING/PAPER EXIT FAN

1. Open the right door.
2. Rear cover (☛p.4-15 "Rear Cover")
3. Right rear cover (☛p.4-15 "Right Rear Cover")
4. High voltage supply board bracket (☛p.4-128 "High Voltage Supply Board Bracket")

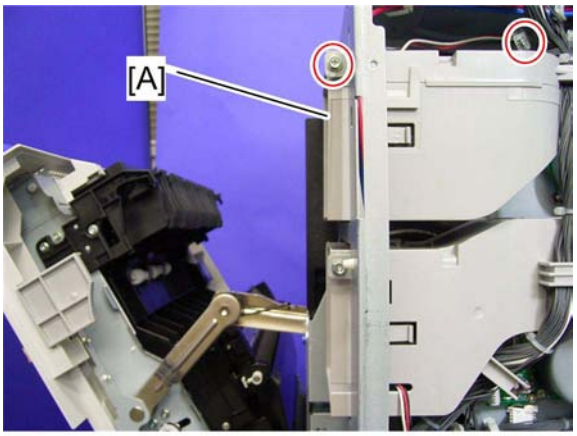


b230r197a

5. Fusing/paper exit fan [A] (🔩 x 1, 🖐 x 1, hook x 2)

### *When Reinstalling the Fan*

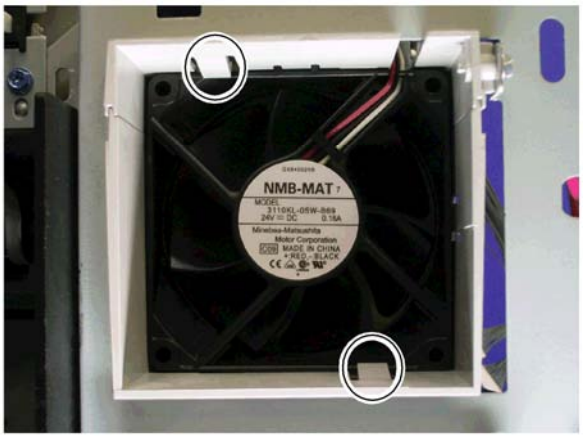


Make sure that the fusing/paper exit fan is installed with its decal facing to the right side.

## 4.11.14 THERMOPILE

1. Open the right door.
2. Front right cover (☛p.4-16 "Operation Panel")
3. Fusing unit (☛p.4-87 "Fusing Unit")

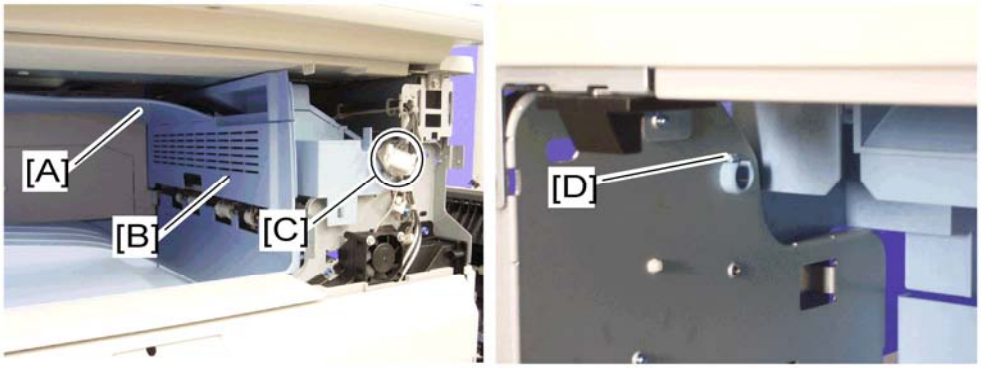


4. Remove the inverter tray [A].
5. Release the hook [D] of the inner cover at the inside frame, and then remove the inner cover [B].
6. Disconnect the connector [C].

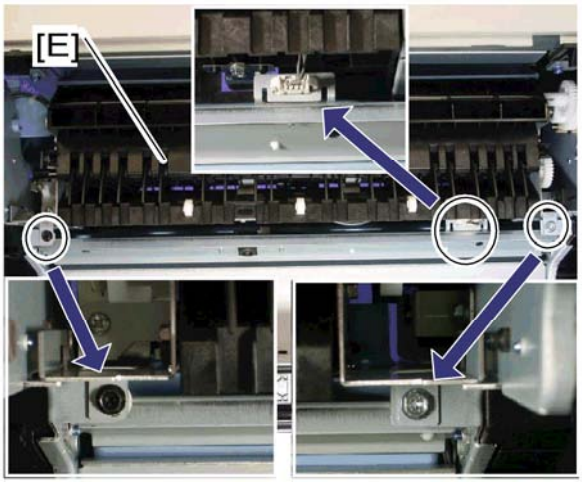


7. Paper exit unit [E] (🖉 x 2, 🖐 x 1)

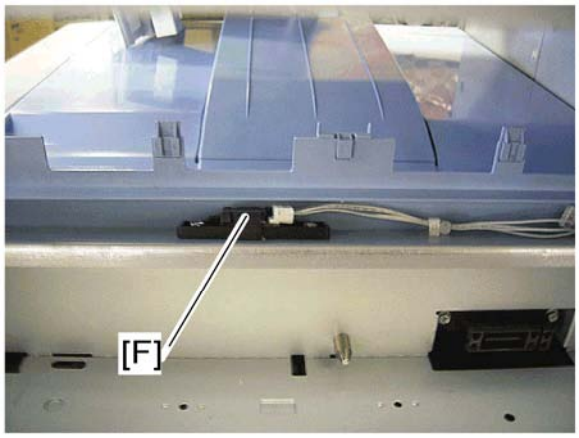


8. Thermopile [F] (🖉 x 2, 🖐 x 1)

# 4.12 PAPER FEED

## 4.12.1 PAPER FEED UNIT

1. Rear cover (☛p.4-15 "Rear Cover")
2. Right rear cover (☛p.4-15 "Right Rear Cover")
3. Duplex unit (☛p.4-114 "Duplex Unit")
4. Pull out tray 1 and tray 2.

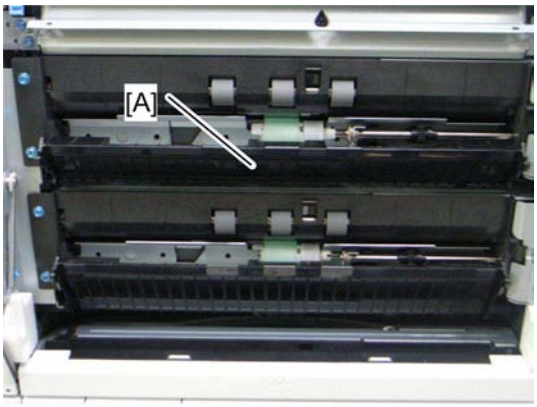


d027r168

5. Paper guide plate [A] (hook x 2)

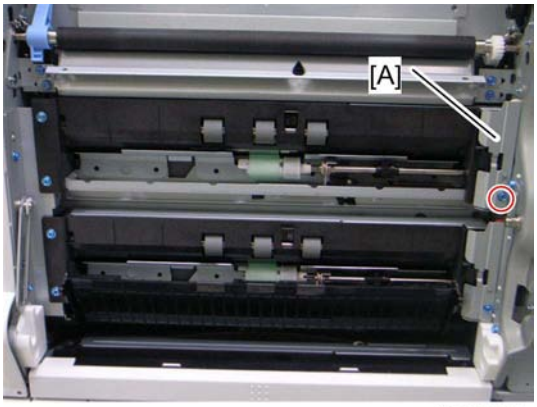


d027r169

6. Harness cover [A] (🔩 x 1)

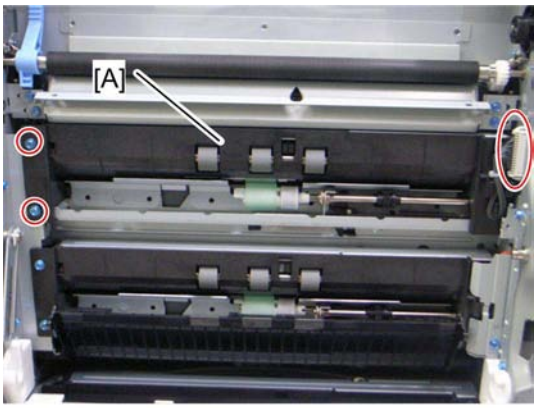


d027r170

7. Paper feed unit [A] (☞ x 2, ☞ x 1)

## 4.12.2 PICK-UP, FEED AND SEPARATION ROLLERS

### *Tray 1 and Tray 2*

1. Paper feed unit (☛p.4-102 "Paper Feed Unit")

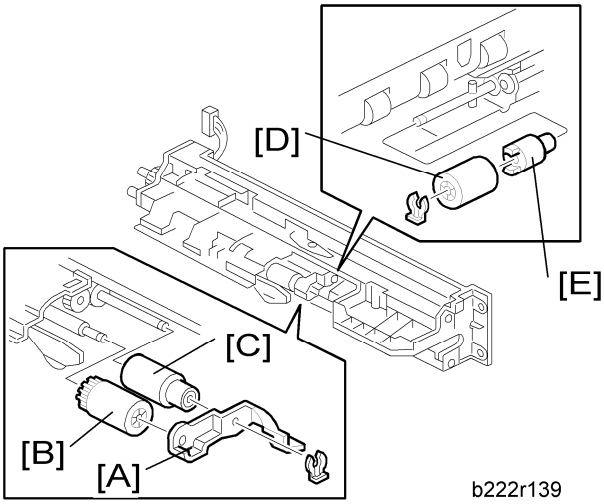


b222r139

2. Roller holder [A] (☞ x 1)
3. Pick-up roller [B]
4. Feed roller [C]
5. Separation roller [D] and torque limiter [E] (☞ x 1)

## 4.12.3 TRAY LIFT MOTOR

1. Rear cover (☛p.4-15 "Rear Cover")
2. PSU bracket (☛p.4-126)
3. High voltage supply board bracket (☛p.4-128 "High Voltage Supply Board Bracket")

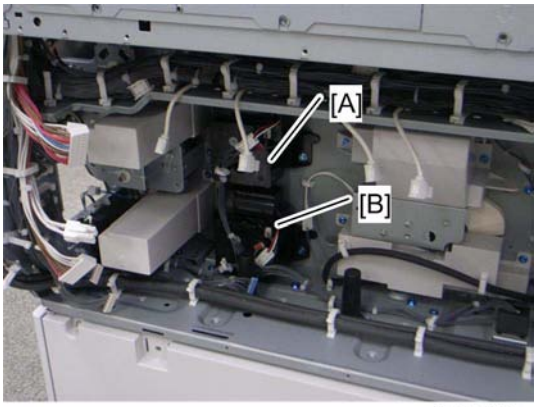


d027r173

4. Tray lift motor 1 [A] or 2 [B] (☞ x 2, ☞ x 3, ☞ x 1 each)

## 4.12.4 VERTICAL TRANSPORT, PAPER OVERFLOW AND PAPER END SENSOR

1. Rear cover (☛p.4-15 "Rear Cover")
2. Right rear cover (☛p.4-15 "Right Rear Cover")
3. Paper feed unit (☛p.4-102 "Paper Feed Unit")

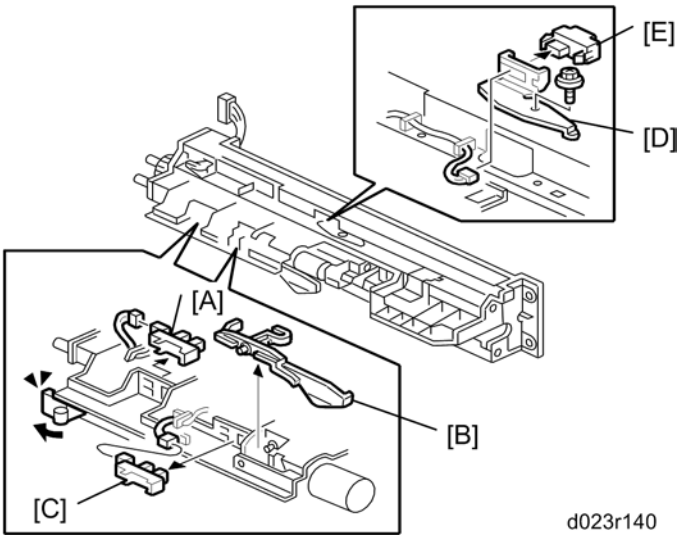


4. Paper overflow sensor [A]
5. Paper end feeler [B] and paper end sensor [C] (hook, ☞ x 1 each)
6. Vertical transport sensor bracket [D] (☞ x 1, ☞ x 1)
7. Vertical transport sensor [E] (☞ x 1, hook)

## 4.12.5 REGISTRATION SENSOR

1. Rear cover (☛p.4-15 "Rear Cover")
2. Right rear cover (☛p.4-15 "Right Rear Cover")

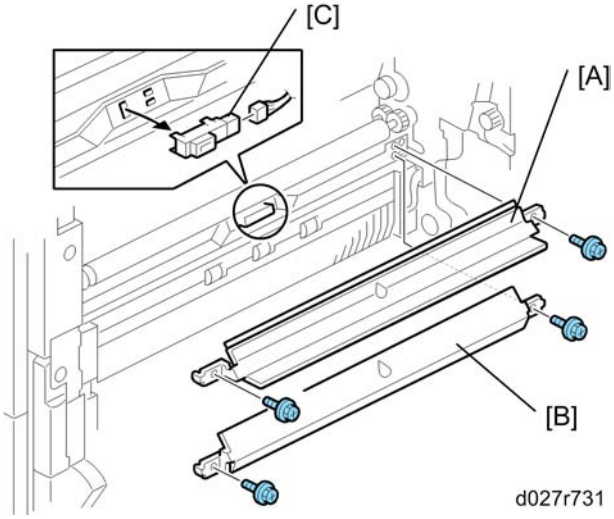


3. Paper guide plate 1 [A] and 2 [B] (🔩 x 2 each)
4. Registration sensor [C] (✋ x 1, hook)

## 4.12.6 BY-PASS PAPER SIZE SENSOR AND BY-PASS PAPER LENGTH SENSOR

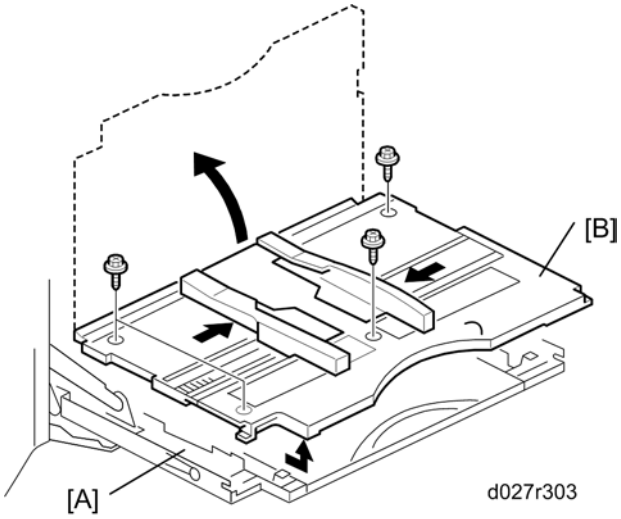


1. Open the by-pass tray [A].
2. Move the side fences to the center.
3. By-pass tray cover [B] (✐ x 4)

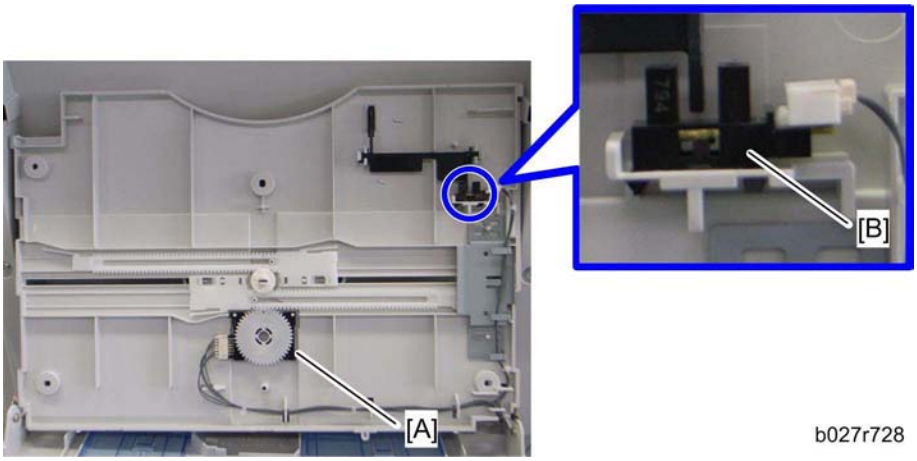


4. By-pass paper size sensor [A] (☞ x 1).
5. By-pass paper length sensor [B] (☞ x 1)

### *When reinstalling the by-pass paper size sensor*

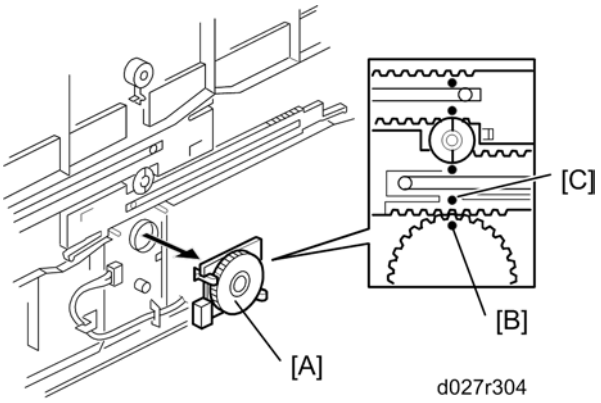


1. Adjust the projection [A] of the left side fence bar (it must be centered).
2. Install the by-pass paper size detection switch so that the hole [B] in this switch faces the projection [C] of the left side fence bar.
3. Reassemble the copier.
4. Plug in and turn on the main power switch.
5. Check this switch operation with SP5803-011 (By-pass paper size < Input Check).

**- Display on the LCD -**

| Paper Size | Display | Paper Size | Display |
|---|---|---|---|
| A3 SEF | 00001110 | A5 SEF | 00001011 |
| B4 SEF | 00001100 | B6 SEF | 00000011 |
| A4 SEF | 00001101 | A6 SEF | 00000111 |
| B5 SEF | 00001001 | Smaller A6 SEF | 00001111 |

## 4.12.7 BY-PASS BOTTOM TRAY

1. Open the right door.
2. By-pass tray cover (☛p.4-105 "By-pass Paper Size Sensor and By-pass Paper Length Sensor")

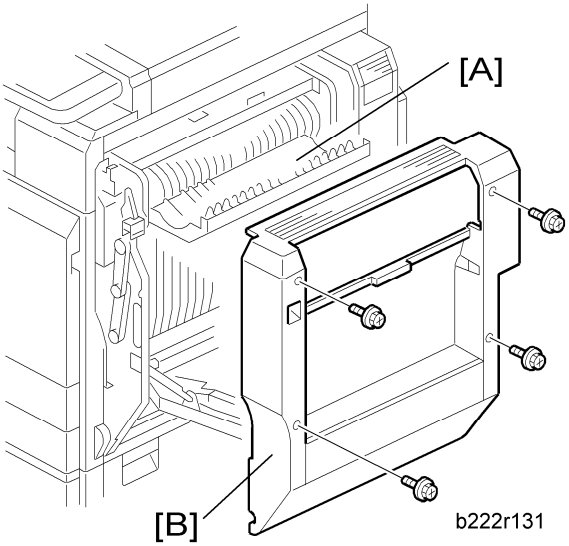


3. Open the duplex door [A].
4. Right door cover [B] (🔩 x 4)

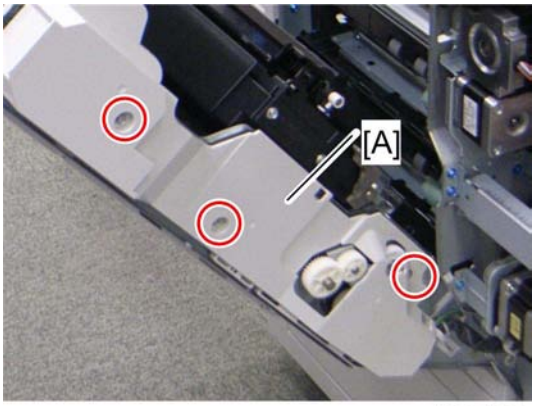


5. Right door rear cover [A] (🔩 x 3)

Paper Feed

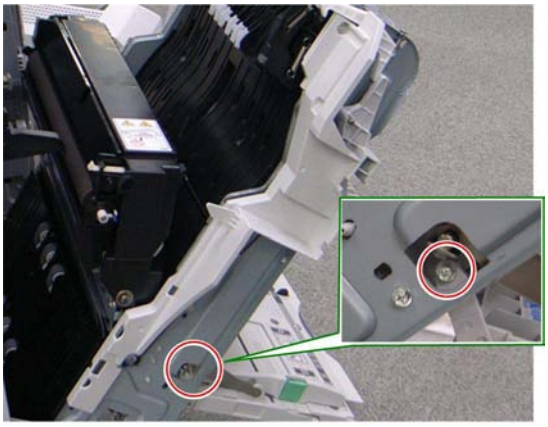

d027r175

6. Remove the screw at the front side (🖉 x 1).

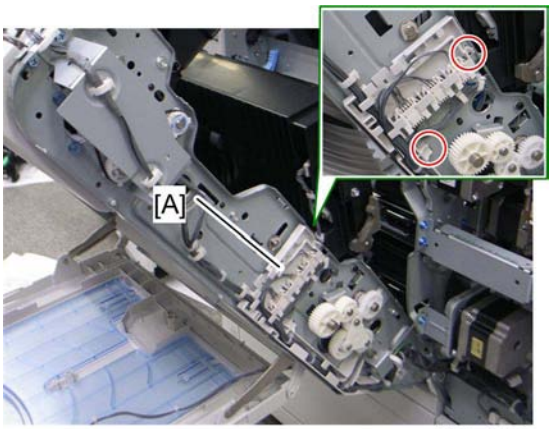


d027r177

7. Remove the cover [A] (2 hooks).

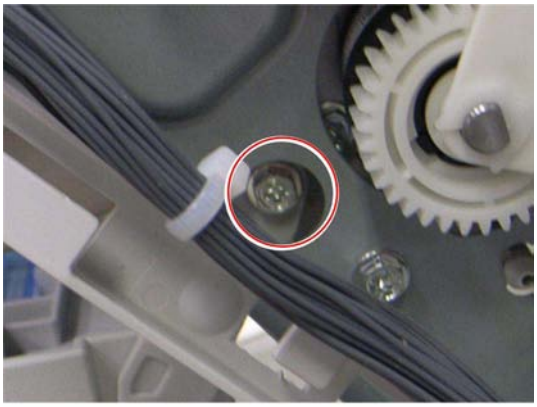

d027r178

8. Remove the screw at the rear side.

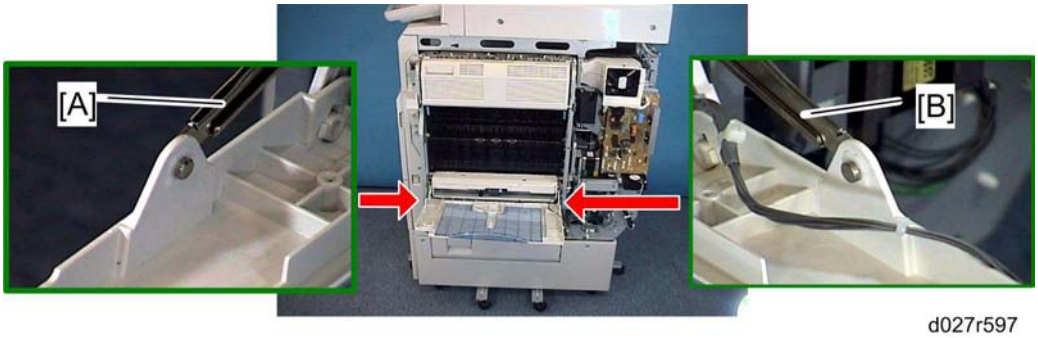


9. Release the front [A] and rear [B] arms (x 1 each).

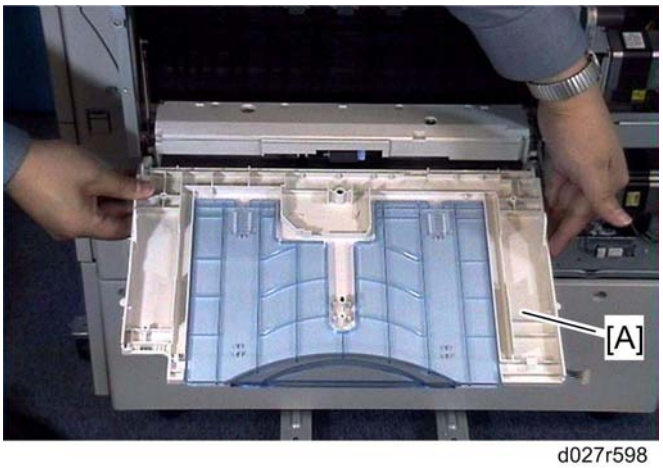


10. By-pass bottom tray [A]

## 4.12.8 BY-PASS PAPER END SENSOR

1. Right door cover (☛p.4-107 "By-pass Bottom Tray")

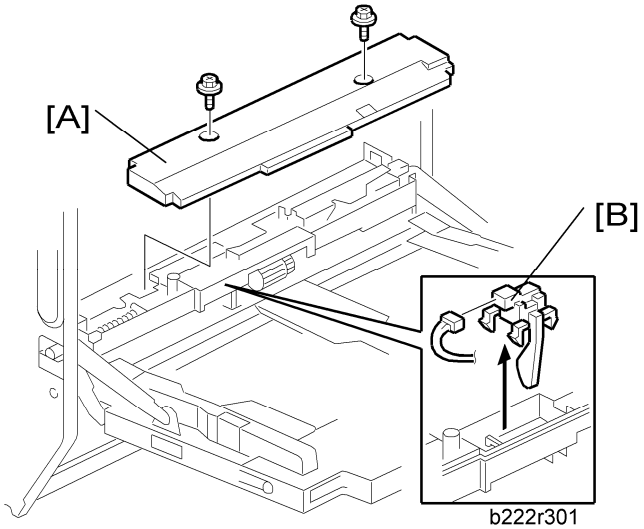


2. By-pass feed unit cover [A] (🔩 x 2).
3. By-pass paper end sensor [B] (☞ x 1, hook)

## 4.12.9 BY-PASS PICK-UP, FEED AND SEPARATION ROLLER, TORQUE LIMITER

1. Right door cover (☛p.4-107 "By-pass Bottom Tray")

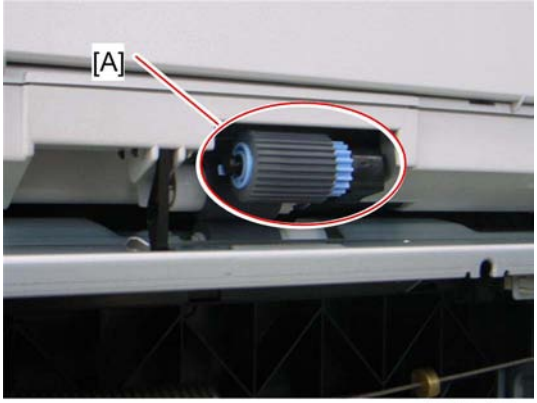


d027r179

2. By-pass pick-up roller [A] (hook)

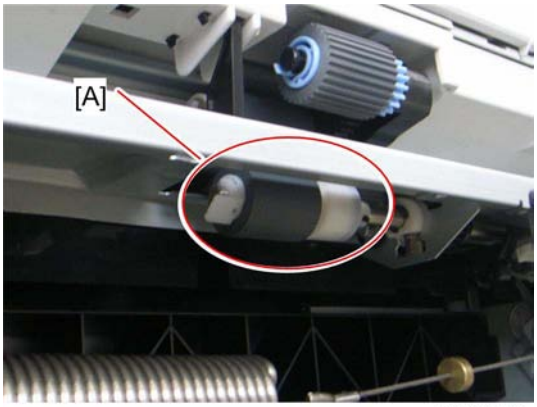


d027r180

3. By-pass feed roller [A] (⚲ x 1)
4. By-pass feed unit cover (☛p.4-109 "By-pass Paper End Sensor")

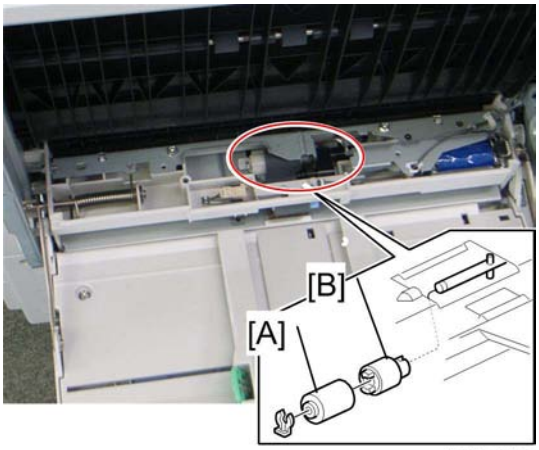


d027r302

5. By-pass separation roller [A] (⚲ x 1)

Paper Feed

6. Torque limiter [B]

## 4.12.10 BY-PASS FEED CLUTCH

1. Open the right door.
2. Right door rear cover (☛p.4-107)

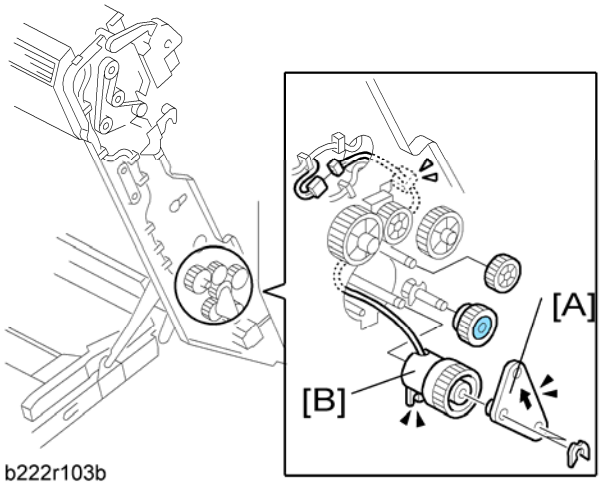


3. By-pass feed clutch holder [A] (x 2)
4. By-pass feed clutch [B] (x 1, x 1)

## 4.12.11 PAPER EXIT UNIT

1. Fusing Unit (☛p.4-87 "Fusing Unit")
2. Front right cover (☛p.4-16)
3. Image transfer belt unit (☛p.4-55 "Image Transfer Belt Unit")
4. Inner Tray (☛p.4-17 "Inner Tray")
5. Thermopile (☛p.4-100 "Thermopile")
6. Rear cover (☛p.4-15 "Rear Cover")
7. Right rear cover (☛p.4-15 "Right Rear Cover")
8. Fusing duct (☛p.4-99 "Fusing/Paper Exit Fan")
9. Open the controller box (☛p.4-122 "Controller Box").

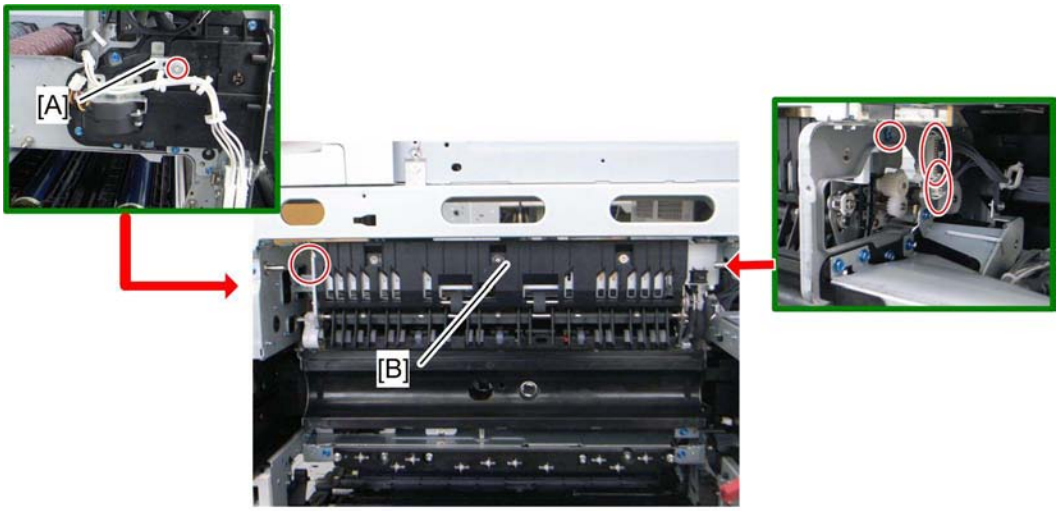


d027r181

10. Gear cover [A] (☞ x 1)
11. Paper exit unit [B] (☞ x 2, ☞ x 2)

## 4.12.12 FUSING EXIT, PAPER OVERFLOW, JUNCTION PAPER JAM AND PAPER EXIT SENSOR

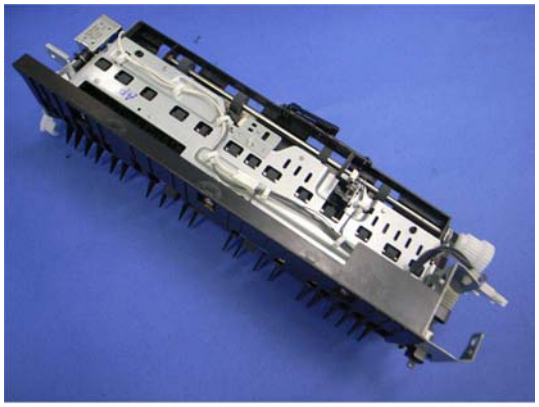

d027r182

1. Paper exit unit (☛p.4-111 "Paper Exit Unit")

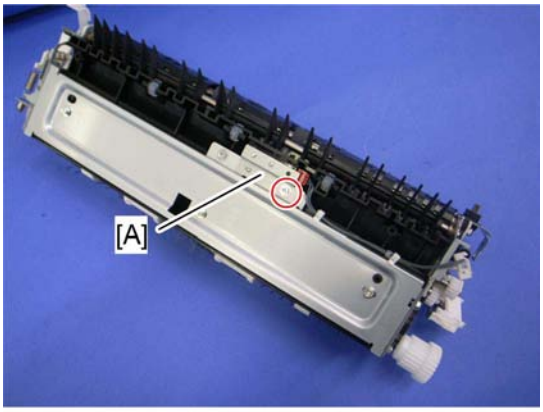


d027r183

2. Fusing exit sensor bracket [A] (🔩 x 1, ✋ x 1)
3. Remove the fusing exit sensor from the fusing exit sensor bracket (🔩 x 1).

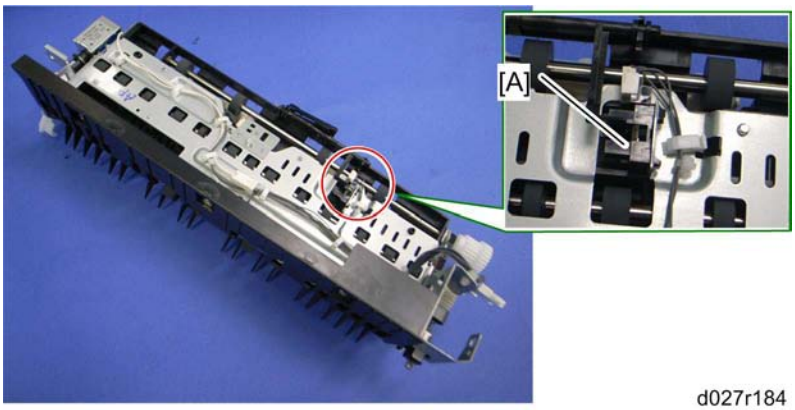


d027r184

4. Paper overflow sensor [A] (✋ x 1, hook)

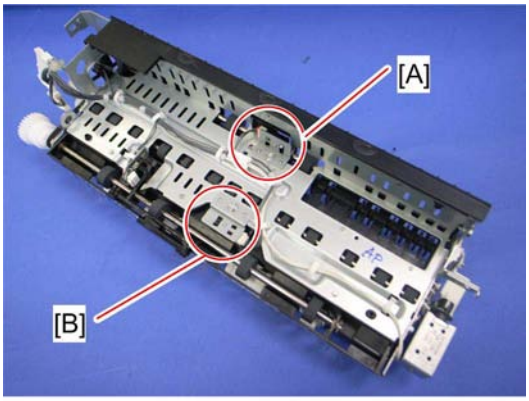


d027r185

5. Junction paper jam sensor bracket [A] (x 1, x 1)
6. Remove the junction paper jam sensor from the junction paper jam sensor bracket (hook)
7. Paper exit sensor bracket [B] (x 1, x 1)
8. Remove the paper exit sensor from the paper exit sensor bracket (hook).

# 4.13 DUPLEX UNIT

## 4.13.1 DUPLEX UNIT

1. Rear cover (☛p.4-15)
2. Right rear cover (☛p.4-15)

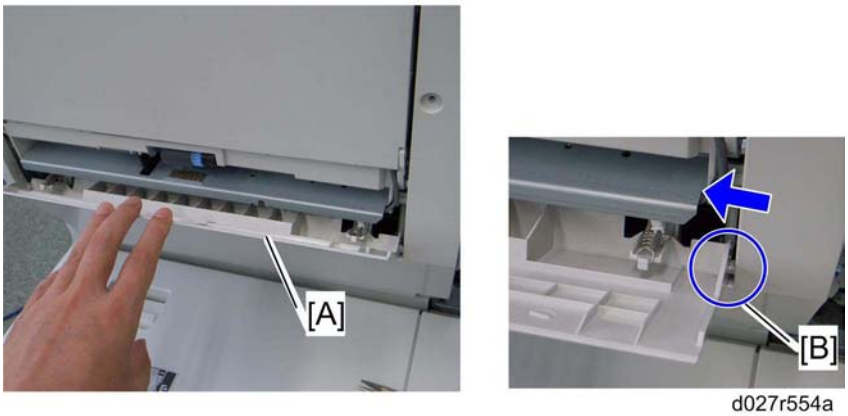


d027r554a

3. Open the lower door [A] of the duplex unit.
4. Release the tab [B] and remove the lower door (spring x 2).
5. Open the right door.

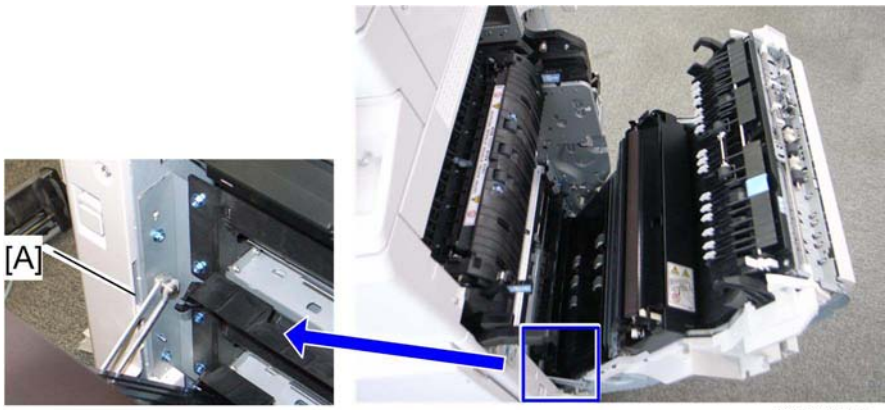


d027r555a

6. Release the front link [A] (⚙ x 1).
7. Keep the right door fully open.

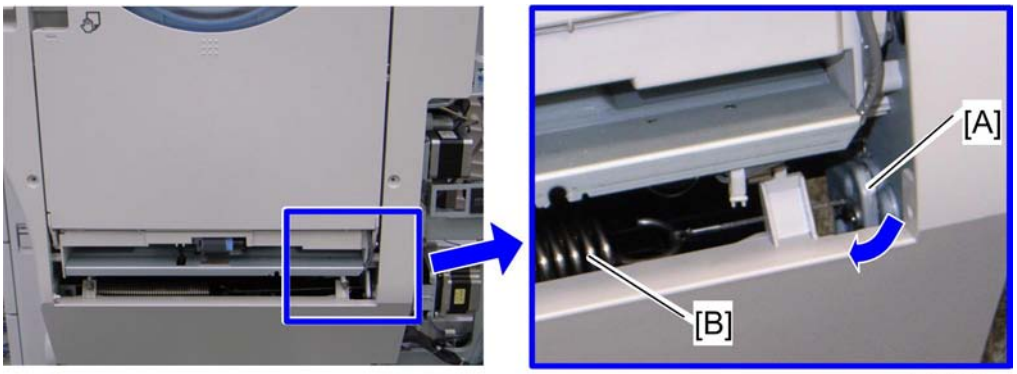


d027r556a

8. Push up the duplex unit a little bit, while pressing the bracket [A] to lock the spring [B].

Note

- Do not let the duplex unit open fully before releasing the wire (step 9). Otherwise, the lock for the spring [B] is released.

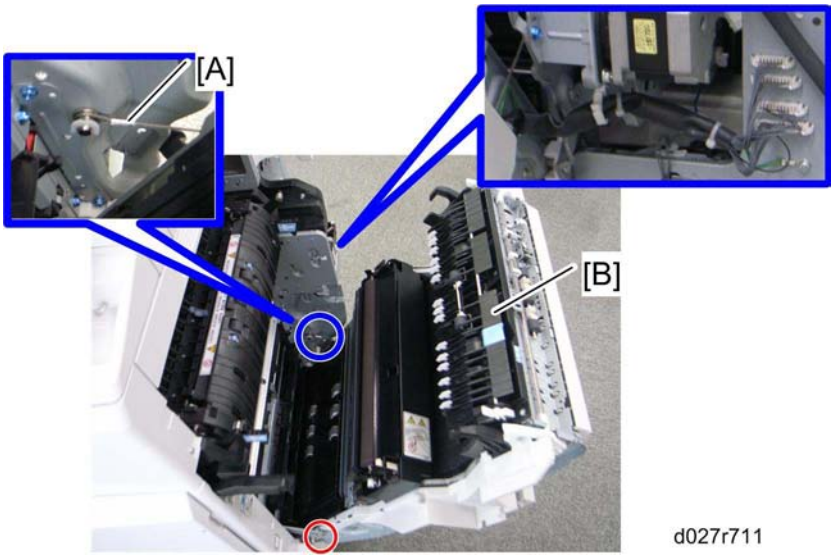


d027r711

9. Wire [A] ( x 1)
10. Duplex unit [B] ( x 1, Stud screw x 1, x 1, x 4, ground cable x 1)

## 4.13.2 DUPLEX DOOR SENSOR

1. Right door cover (☛ "p.4-114")
2. Open the right door.

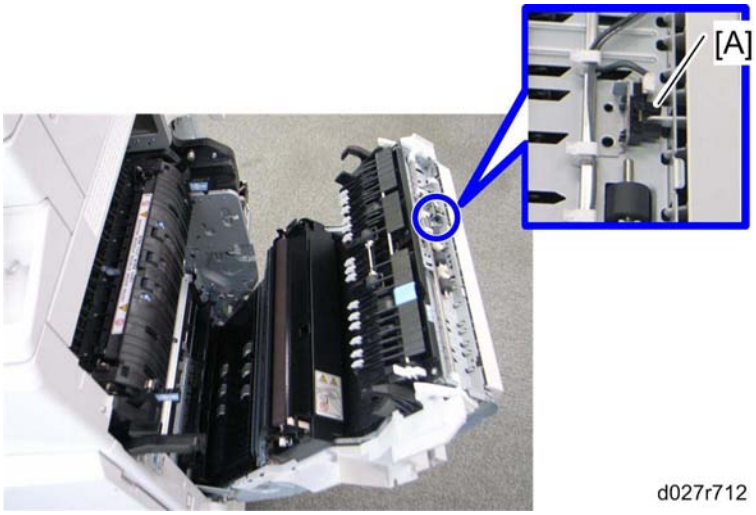


3. Duplex door sensor [A] (☶ x 1, hook)

## 4.13.3 DUPLEX ENTRANCE SENSOR

1. Right door cover (☛ "p.4-114")
2. Open the right door.

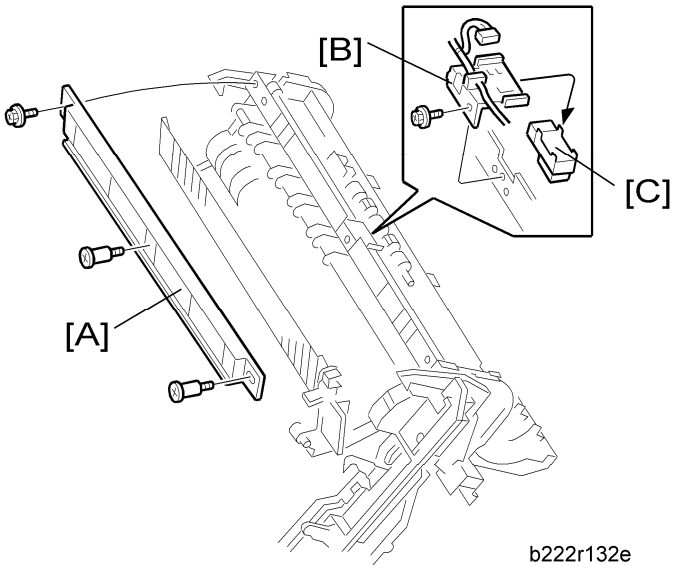


3. Duplex entrance guide [A] (☞ x1, stepped screw x 2)
4. Duplex entrance sensor bracket [B] (☞ x 1, ☶ x 1)
5. Duplex entrance sensor [C] (hook)

## 4.13.4 DUPLEX EXIT SENSOR

1. Paper transfer unit (☛p.4-61 "Paper Transfer Unit")

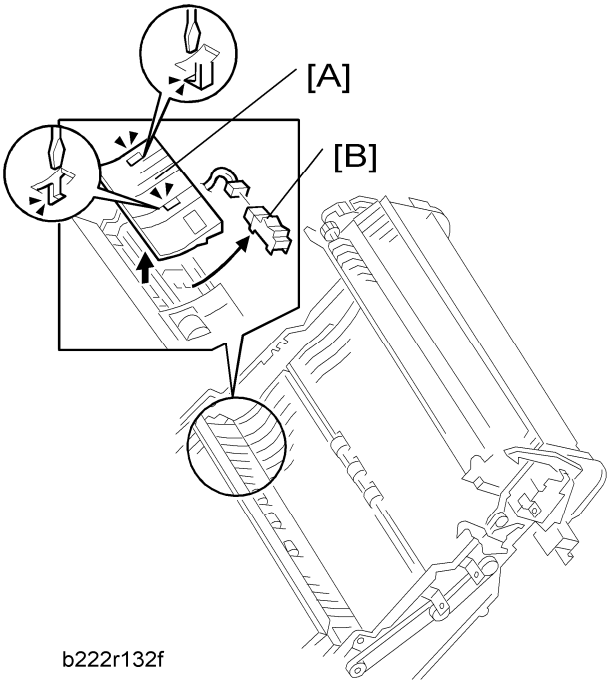


2. Guide plate [A] (two hooks)
3. Duplex exit sensor [B] (☞ x 1, hook)

# 4.14 ELECTRICAL COMPONENTS

## 4.14.1 BOARDS

**Controller Box closed**

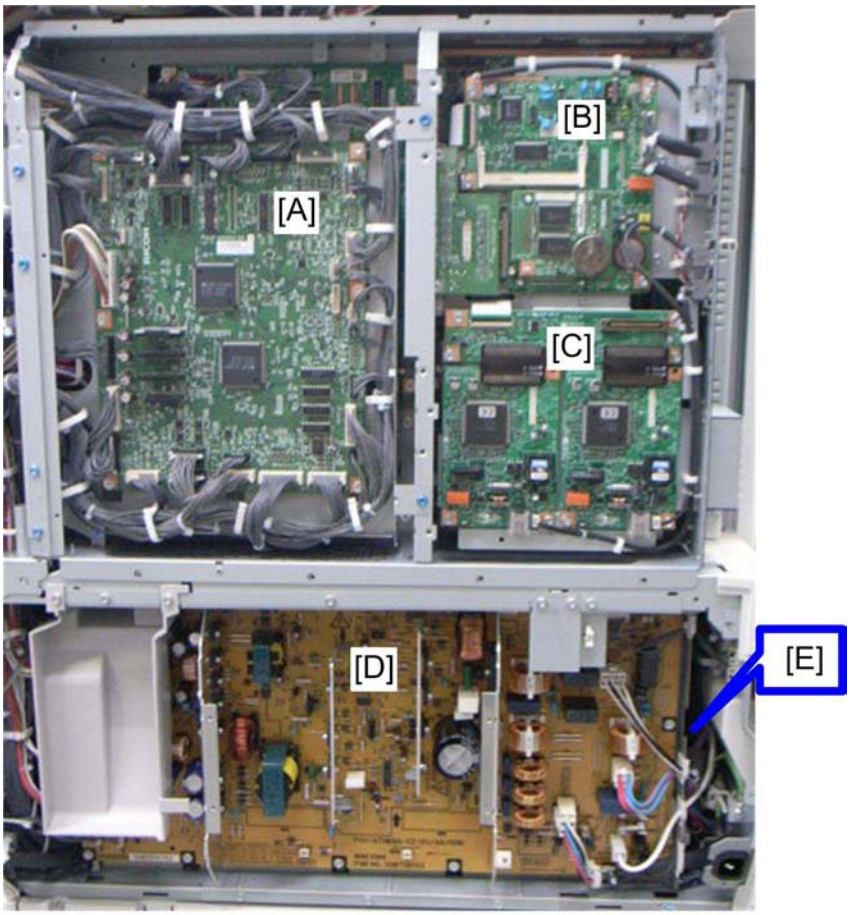


d027r729

| | |
|---|---|
| [A] | IOB |
| [B] | FCU (Option) |
| [C] | G3 Interface Unit (Option) |
| [D] | PSU |
| [E] | High Voltage Supply Board (Behind the PSU [D] ) |

**Behind the IOB, FCU and G3 Interface Unit**

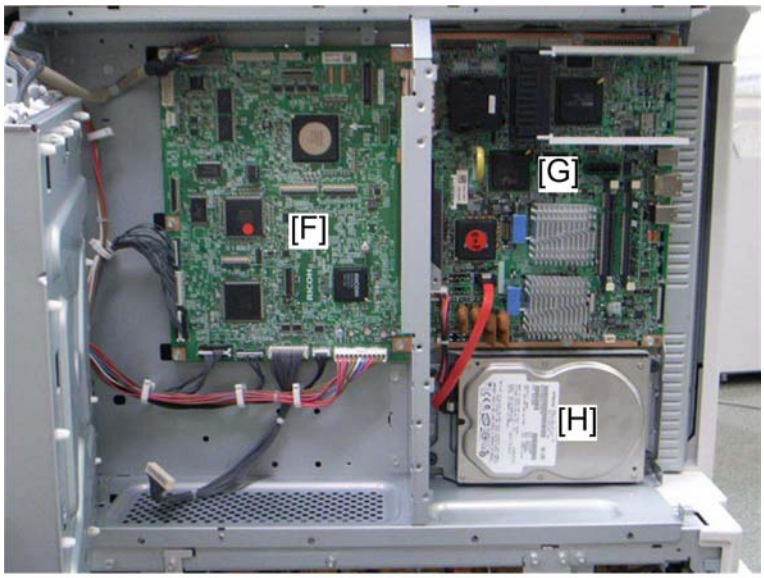


d027r729a

| | |
|---|---|
| [F] | BICU |
| [G] | Controller Board |
| [H] | HDD |

**Controller Box Open**

Electrical Components

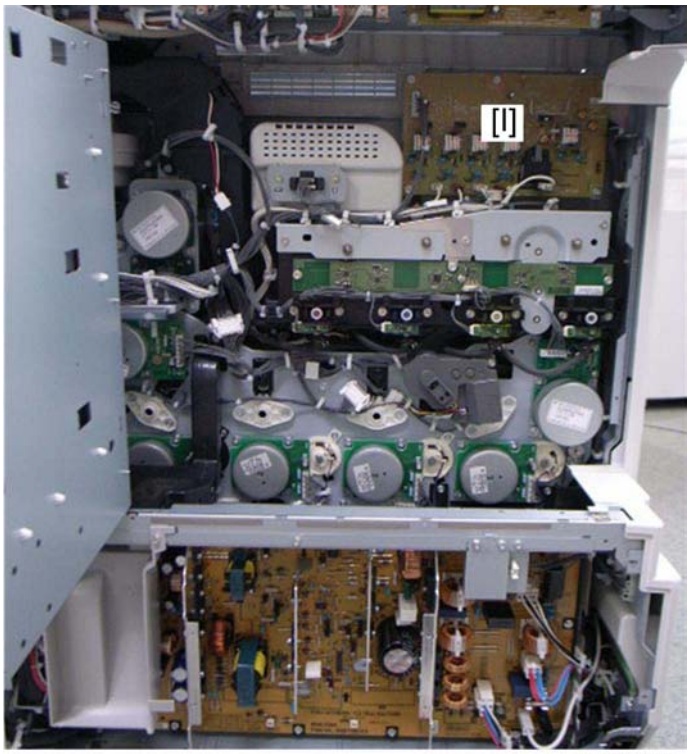


d027r730

| | |
|---|---|
| [I] | ITB Power Supply Board |

## 4.14.2 CONTROLLER UNIT

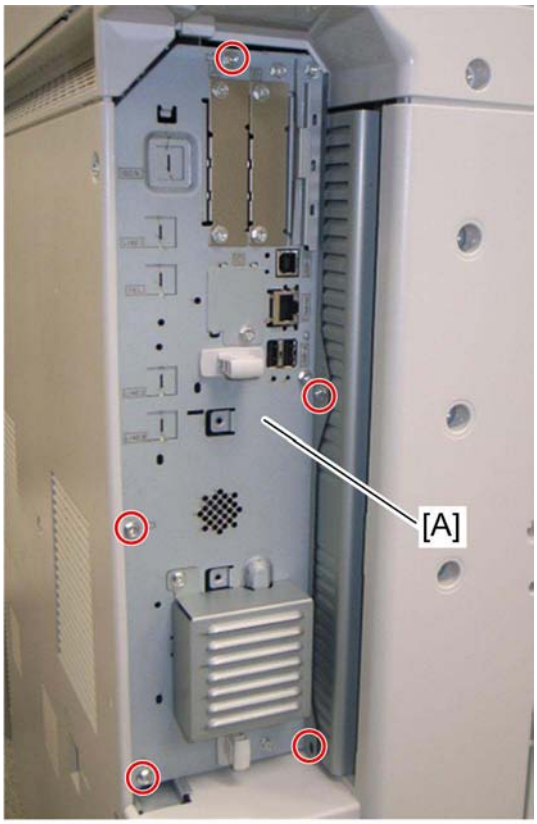


d027i075

1. Controller unit [A] (🔩 x 5)

## 4.14.3 CONTROLLER BOX RIGHT COVER

1. Rear cover (☛p.4-15 "Rear Cover")
2. Scanner rear cover (☛p.4-21 "Exposure Lamp")

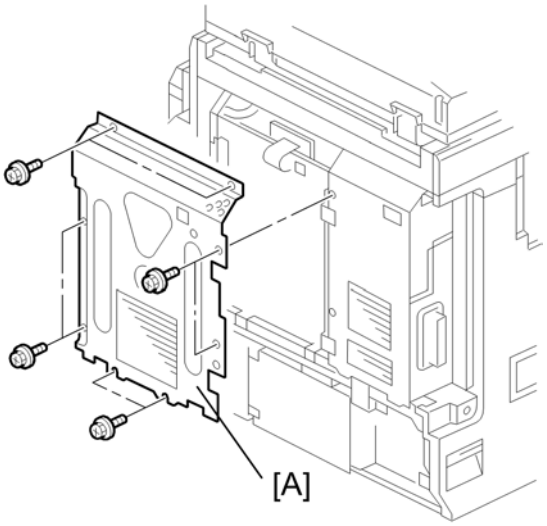


b222r107b

3. Controller box right cover [A] (🔩 x 8)

## 4.14.4 CONTROLLER BOX

### *When opening the controller box*

1. Rear cover (☛p.4-15 "Rear Cover")
2. Scanner rear cover (☛p.4-21 "Exposure Lamp")

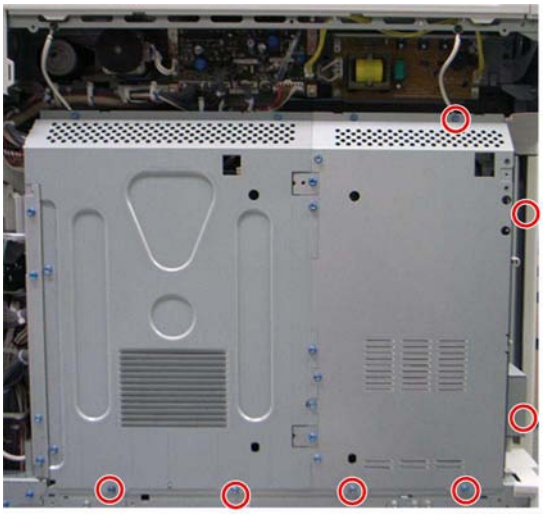

d023r603

3. Remove seven screws.

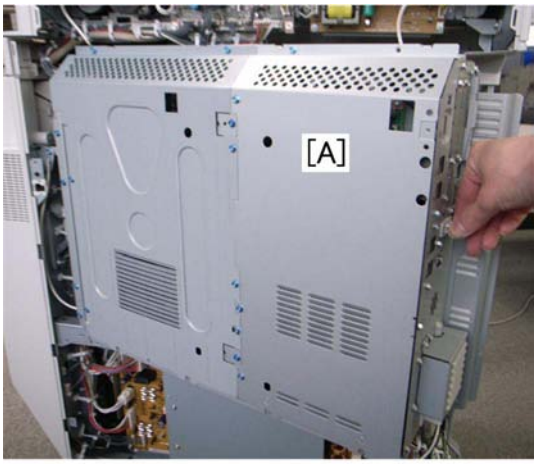


d023r110

4. Open the controller box [A].

### *When removing the controller box*

1. Rear cover (☛p.4-15 "Rear Cover")
2. Scanner rear cover (☛p.4-21 "Exposure Lamp")
3. Right rear cover (☛p.4-15 "Right Rear Cover")
4. Controller box right cover (☛p.4-121 "Controller Box Right Cover ")

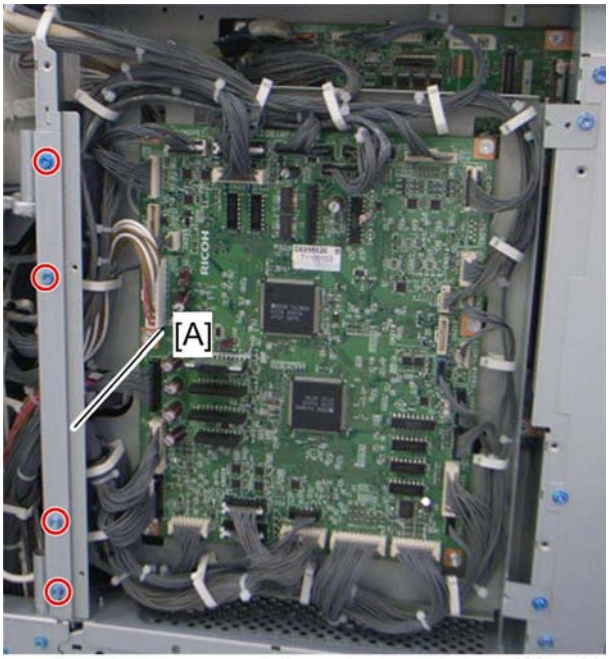


d027r714

5. Remove the controller box stay [A] (☞ x 4).

Electrical Components

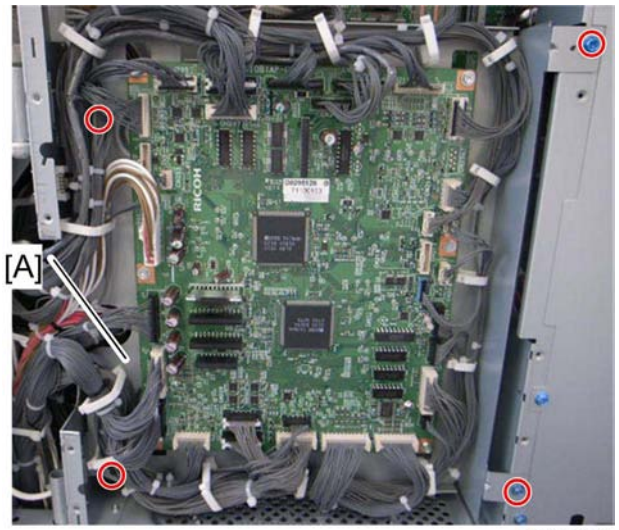


d027r713

6. Move the IOB bracket [A] aside (🖉 x 4, 🖐 x All).

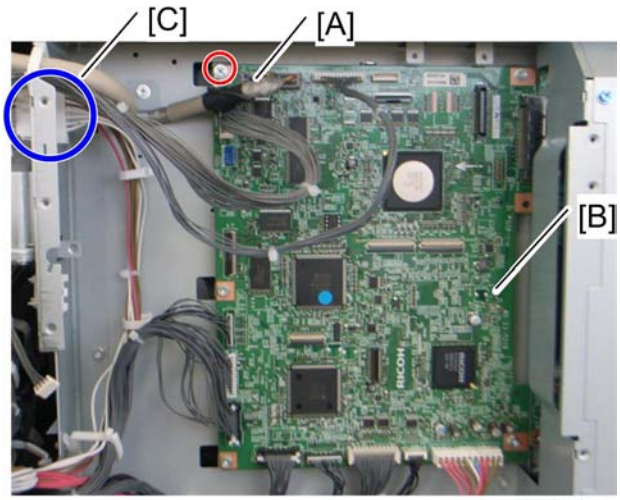


d027r715

7. Disconnect the scanner interface cable [A] (ground cable)
8. Release all clamps on the controller box frame.
9. Disconnect all connectors on the BICU [B] board.
10. Disconnect the connector [C] at the outer controller box and at the inner controller box.

b023r607

11. Lift up the controller box [A], and then remove it.

## 4.14.5 IOB (IN/OUT BOARD)

1. Rear cover (☛p.4-15 "Rear Cover")
2. Scanner rear cover (☛p.4-21 "Exposure Lamp")
3. Controller box right cover (☛p.4-121 "Controller Box Right Cover ")

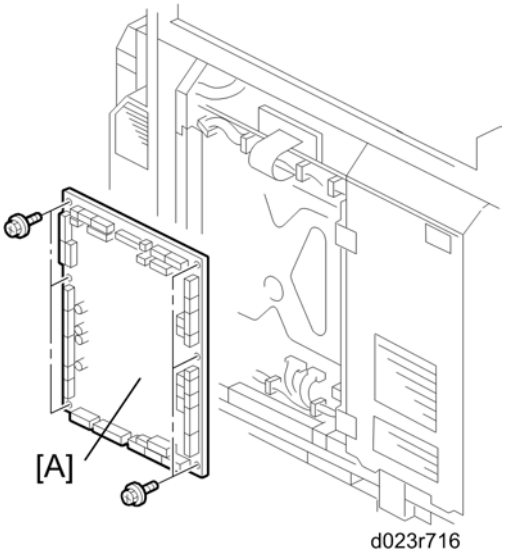


4. IOB [A] (🔩 x 6, All 🔊s)

## 4.14.6 BICU

1. Rear cover (☛p.4-15 "Rear Cover")
2. Scanner rear cover (☛p.4-21 "Exposure Lamp")
3. Controller box right cover (☛p.4-121 "Controller Box Right Cover ")
4. Disconnect the harness (CN225) on the IOB board.
5. Move the IOB bracket aside (☛p.4-122 "Controller Box")

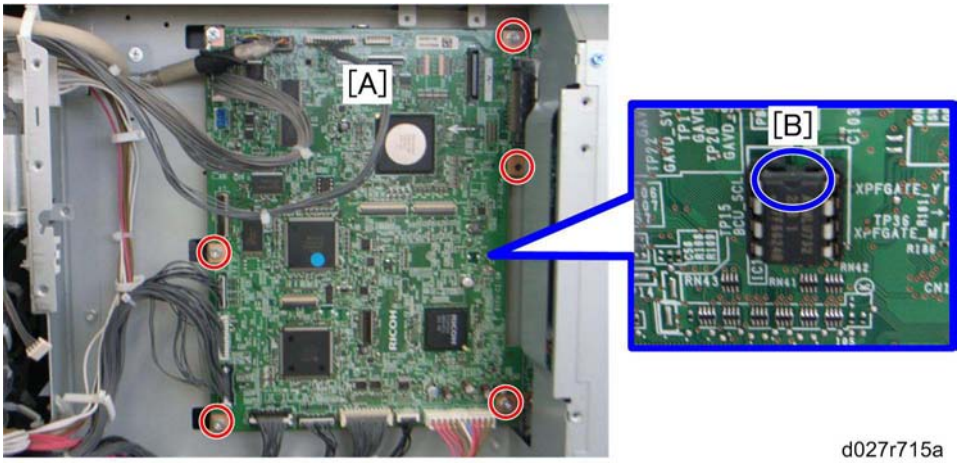


6. BICU [A] (🔩 x 5, 🖐 x All)

Note

- Make sure the NVRAM is correctly installed on the BICU. Insert the NVRAM in the NVRAM slot with the "half-moon" pointing [B] to the upward side.

### *When installing the new BICU*

Remove the NVRAM from the old BICU. Then install it on the new BICU after you replace the BICU. Replace the NVRAM (☛ "NVRAM Replacement Procedure" in the Appendices) if the NVRAM on the old BICU is defective.

Note

- Make sure you print out the SMC reports ("SP Mode Data" and "Logging Data") before you replace the NVRAM.

**⚠CAUTION**

- Keep NVRAMs away from any objects that can cause static electricity. Static electricity can damage NVRAM data.
- Make sure that the DIP-switch settings on the old BICU are the same for the new BICU when. Do not change the DIP switches on the BICU in the field.
- Make sure the serial number is input in the machine for the NVRAM data; if not, SC 995-001 occurs.

## 4.14.7 PSU

### *PSU bracket*

1. Rear cover (☛p.4-15 "Rear Cover")

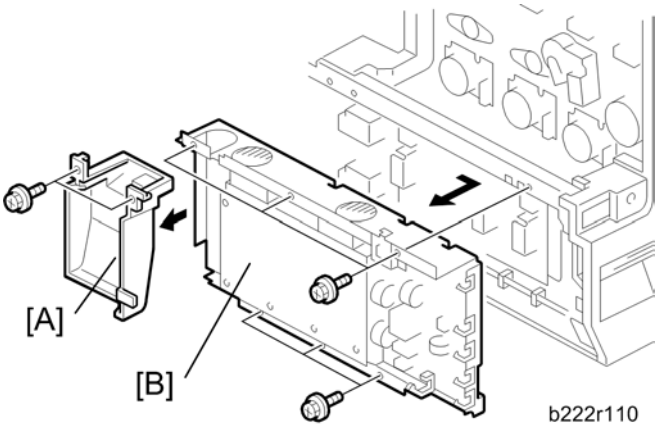


2. Ventilation duct [A] (🖉 x 2)
3. PSU bracket [B] (🖉 x 6, 🔩 x All, 🔩 x All)

### *PSU board*

1. Rear cover (☛p.4-15 "Rear Cover")
2. Ventilation duct (see "PSU bracket")

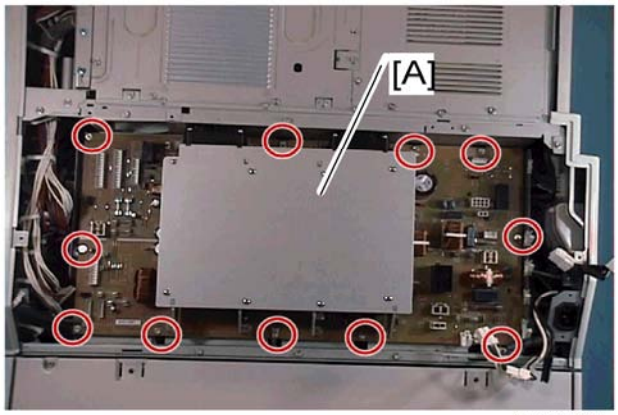

b222r608

3. PSU board [A] (🖉 x 11, all 🔩s, all 🔩s)

## 4.14.8 ITB POWER SUPPLY BOARD

1. Rear cover (☛p.4-15 "Rear Cover")
2. Scanner rear cover (☛p.4-21 "Exposure Lamp")
3. Open the controller box (☛p.4-122 "Controller Box")

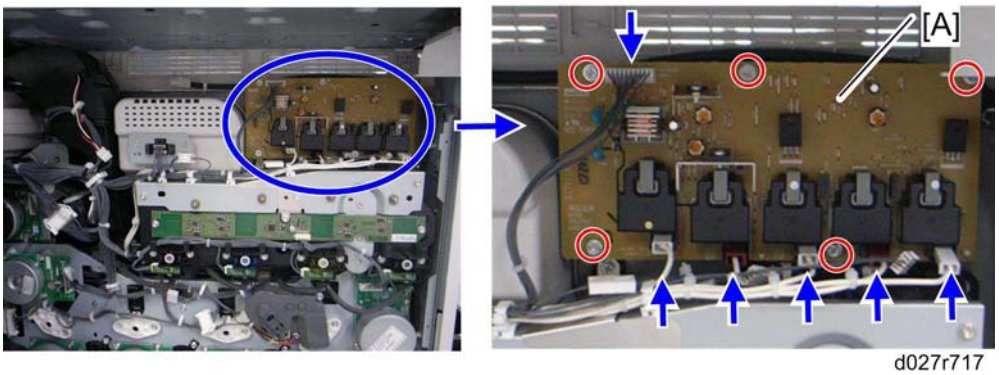


d027r717

4. ITB power supply board [A] (🔩 x 5, 🔌 x 6)

## 4.14.9 HIGH VOLTAGE SUPPLY BOARD

1. Rear cover (☛p.4-15 "Rear Cover")
2. PSU bracket (☛p.4-126 "PSU")

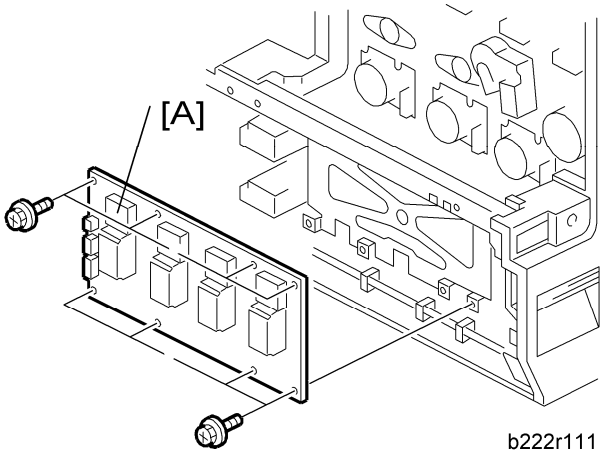


b222r111

3. High voltage supply board [A] (🔩 x 8, All 🔌 s, 🔗 x 2)

## 4.14.10 HIGH VOLTAGE SUPPLY BOARD BRACKET

1. Rear cover (☛p.4-15 "Rear Cover")
2. PSU bracket (☛p.4-126 "PSU")

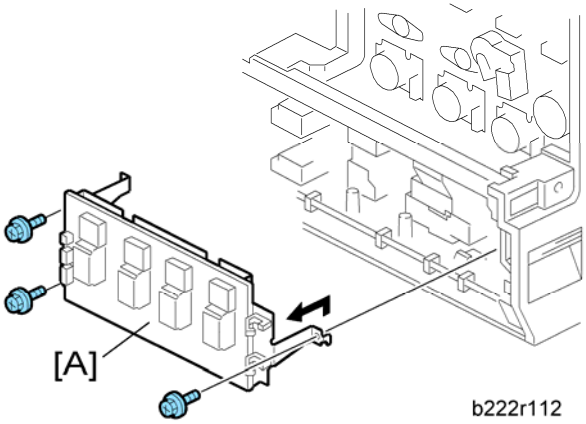


3. High voltage supply board bracket [A] (🔩 x 3, 🖐 x All, 🔩 x 2)

## 4.14.11 CONTROLLER BOARD

1. Controller unit (☛p.4-121 "Controller Unit")

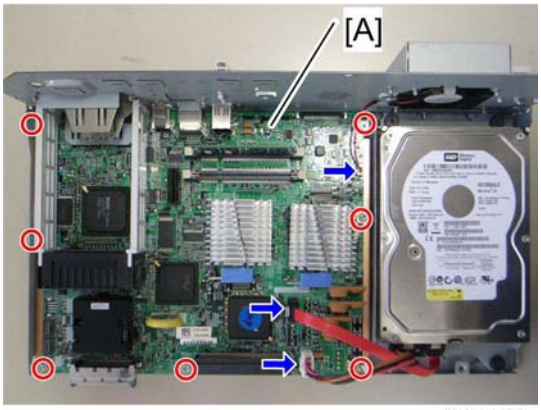


d027r720

2. Controller board [A] (🔩 x 7, 🖐 x 3)

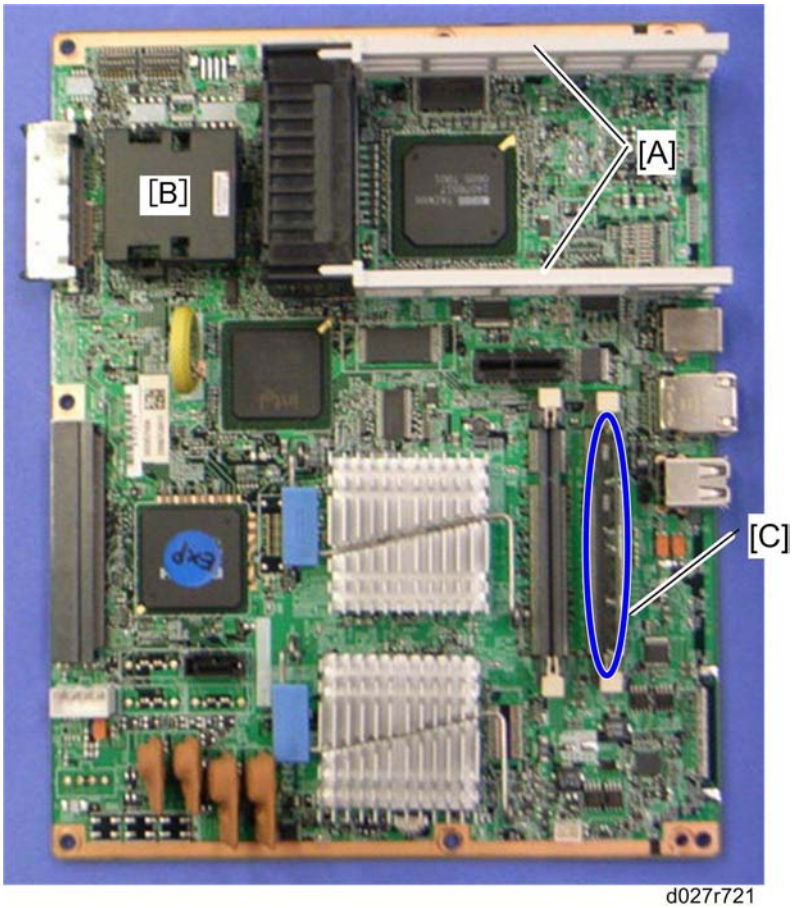


d027r721

3. Interface rails [A], NV-RAM [B], RAM-DIMM [C]

### *When installing the new controller board*

Remove the NVRAM from the old controller board. Then install it on the new controller

board after you replace the controller board. Replace the NVRAM (☛ "NVRAM Replacement Procedure" in the Appendices) if the NVRAM on the old controller board is defective.

Note

- Make sure you print out the SMC reports (“SP Mode Data” and “Logging Data”) before you replace the NVRAM.

**CAUTION**

- Keep NVRAMs away from any objects that can cause static electricity. Static electricity can damage NVRAM data.
- Make sure the NVRAM is correctly installed on the controller board.
- Make sure that the DIP-switch settings on the old controller board are the same for the new controller board. Do not change the DIP switches on the controller board in the field.

## 4.14.12 HDD FAN

1. Controller unit (☛p.4-121 "Controller Unit")

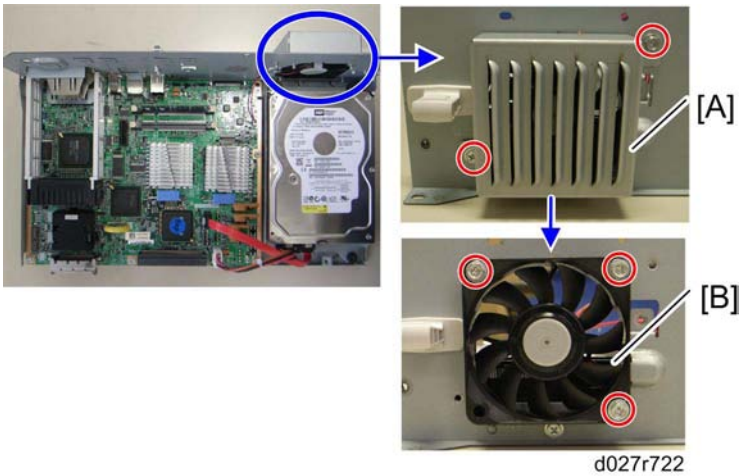


2. HDD fan cover [A] (🖉 x 2)
3. HDD fan [B] (🖉 x 3, ☞ x 1)

## 4.14.13 HDD

1. Controller unit (☛p.4-121 "Controller Unit")

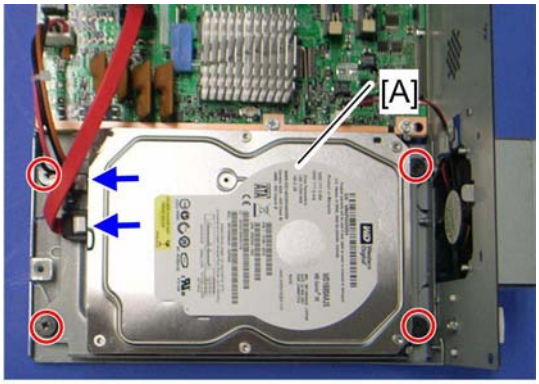


d027r718

2. Remove the HDD [A] with the bracket (🔩 x 4, ✋ x 2).

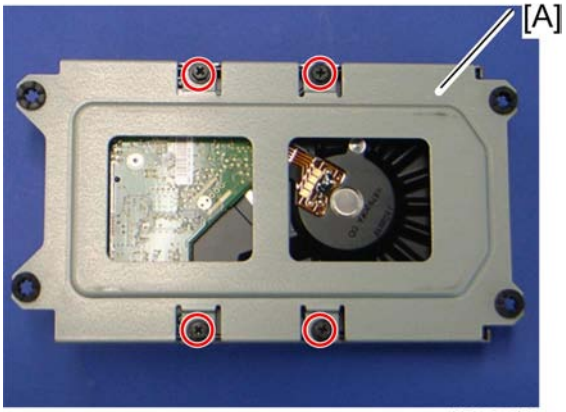


d027r719

3. Remove the HDD from the bracket [A] (🔩 x 4).

### *When installing a new HDD unit*

1. Turn the main power switch on. The disk is automatically formatted.
2. Install the stamp data using "SP5853".
3. Switch the machine off and on to enable the fixed stamps for use.

### *Disposal of HDD Units*

- Never remove an HDD unit from the work site without the consent of the client.
- If the customer has any concerns about the security of any information on the HDD, the HDD must remain with the customer for disposal or safe keeping.
- The HDD may contain proprietary or classified (Confidential, Secret) information. Specifically, the HDD contains document server documents and data stored in

temporary files created automatically during copy job sorting and jam recovery. Such data is stored on the HDD in a special format so it cannot normally be read but can be recovered with illegal methods.

### *Reinstallation*

Explain to the customer that the following information stored on the HDD is lost when the HDD is replaced:

- Document server documents
- Custom-made stamps
- Document server address book

The address book and document server documents (if needed) must be input again.

If you previously backed up the address book to an SD card with SP5846 051, you can use SP 5846 052 to copy the data from the SD card to the hard disk.

If the customer is using the Data Overwrite Security feature, the DOS function must be set up again. For more, see Section 1 (Installation).

If the customer is using the optional Browser Unit, this unit must be installed again. For more, see Section 1 (Installation).

## 4.14.14 NVRAM REPLACEMENT PROCEDURE

### *NVRAM on the BICU*

1. Make sure that you have the SMC report (factory settings). This report comes with the machine.
2. Output the SMC data (☛ SP5-990-001) if possible.
3. Turn the main switch off.
4. Install an SD card into SD card slot 3. Then turn the main power on.
5. Copy the NVRAM data to an SD card (☛ SP5-824-001) if possible.
6. Turn off the main switch. Then unplug the power cord.
7. Replace the NVRAM on the BICU and reassemble the machine.
8. Plug in the power cord. Then turn the main switch on.
9. Select a paper-size type (☛ SP5-131-001).
10. Specify the serial number and destination code of the machine.

    Note

    - Contact your supervisor for details on how to enter the serial number and destination code.
    - SC 999 or “Fusing Unit Setting Error” can be shown until the serial number and destination code are correctly programmed.
11. Turn the main switch off and on.
12. Copy the data from the SD card to the NVRAM (☛ SP5-825-001) if you have successfully copied them to the SD card.
13. Turn the main switch off. Then remove the SD card from SD card slot 3.
14. Turn the main switch on.
15. Specify the SP and UP mode settings.
16. Do the process control self-check.
17. Do ACC for the copier application program.
18. Do ACC for the printer application program.

### *NVRAM on the Controller*

1. Make sure that you have the SMC report (factory settings). This report comes with the machine.
2. Output the SMC data (☛ SP5-990-001) if possible.
3. Turn the main switch off. Then put a blank formatted SD card into SD card slot 3.
4. Turn the main switch on.
5. Copy the NVRAM data (☛ SP5-824-001) and the address book data in the HDD

(SP5846-051) to an SD card if possible.

Note

- An error message shows if local user information cannot be stored in an SD card because the capacity is not enough.
- You cannot do this procedure if the SD card is write-protected.

6. Enter SP mode. Then print out the SMC reports (☛ SP5-990-001) if possible.
7. Turn off the main switch. Then unplug the power cord.
8. Replace the NVRAM on the controller. Then reassemble the machine.
9. Check if the serial number shows on the operation panel. (SP5-811-002). Input the serial number if it does not show. (Contact your supervisor about this setting.)
10. Plug in the power cord. Then turn the main switch on.
11. Copy the data from the SD card to the NVRAM (☛ SP5-825-001) and HDD (SP5-846-52) if you have successfully copied them to the SD card.

    Note

    - The counter data in the user code information clears even if step 11 is done correctly.
    - An error message shows if the download is incomplete. However, you can still use the part of the address book data that has already been downloaded in step 11.
    - An error message shows when the download data does not exist in the SD card, or, if it is already deleted.
    - You cannot do this procedure if the SD card is write-protected.
12. Go out of SP mode. Then turn the main switch off. Then remove the SD card from SD card slot 3.
13. Turn the main switch on.
14. Specify the SP and UP mode settings.
15. Do ACC for the copier application program.
16. Do ACC for the printer application program.

# 4.15 USING DIP SWITCHES

## 4.15.1 CONTROLLER BOARD

| DIP SW No. | OFF | ON |
|---|---|---|
| 1 | Boot-up from Flash Memory | Boot-up from SD card |
| 2 to 8 | Factory Use Only: Do not change the switch settings. | |

## 4.15.2 BICU BOARD

| DIP SW No. | OFF | ON |
|---|---|---|
| 1 and 2 | Factory Use Only: Do not change the switch settings. | |

# SYSTEM

# MAINTENANCE REFERENCE

| SECTION 5 SYSTEM MAINTENANCE REFERENCE REVISION HISTORY | | |
|---|---|---|
| **Page** | **Date** | **Added/Updated/New** |
| | | None |

# 5. SYSTEM MAINTENANCE REFERENCE

## 5.1 SERVICE PROGRAM MODE

**CAUTION**

- Make sure that the data-in LED (⇨) is not on before you go into the SP mode. This LED indicates that some data is coming to the machine. When the LED is on, wait for the copier to process the data.

### 5.1.1 SP TABLES

See "Appendices" for the following information:

- System SP Tables
- Printer SP Tables
- Scanner SP Tables

### 5.1.2 ENABLING AND DISABLING SERVICE PROGRAM MODE

Note

- The Service Program Mode is for use by service representatives only. If this mode is used by anyone other than service representatives for any reason, data might be deleted or settings might be changed. In such case, product quality cannot be guaranteed any more.

#### *Entering SP Mode*

1. Press the "Clear Mode" key (C/⊘).
2. Use keypad to enter "107" (1 0 7).
3. Hold down "Clear/Stop" (C/⊘) for 3 seconds at least.
4. Enter the Service Mode.

#### *Exiting SP Mode*

1. Press "Exit" on the LCD twice to return to the copy window.

## 5.1.3 TYPES OF SP MODES

- System SP: SP modes related to the engine functions
- Printer SP: SP modes related to the controller functions
- Scanner SP: SP modes related to the scanner functions
- Fax SP: SP modes related to the fax functions

Select one of the Service Program modes (System, Printer, Scanner, or Fax) from the touch panel as shown in the diagram below after you access the SP mode. This section explains the functions of the System/Printer/Scanner SP modes. Refer to the Fax service manual for the Fax SP modes.

### *SP Mode Button Summary*

Here is a short summary of the touch-panel buttons.

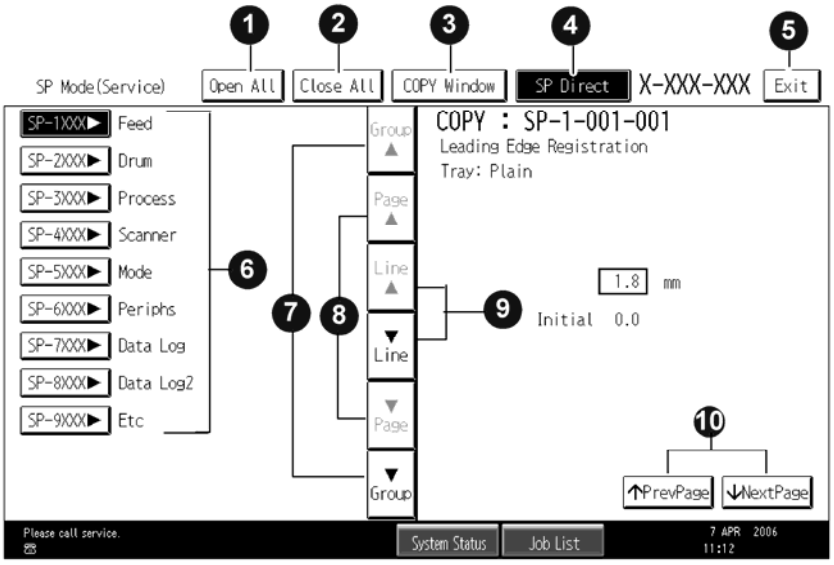

| | |
|---|---|
| ❶ | Opens all SP groups and sublevels. |
| ❷ | Closes all open groups and sublevels and restores the initial SP mode display. |
| ❸ | Opens the copy window (copy mode) so you can make test copies. Press SP Mode (highlighted) in the copy window to return to the SP mode screen, |
| ❹ | Enter the SP code directly with the number keys if you know the SP number. Then press #. (The required SP Mode number will be highlighted when pressing #. If not, just press the required SP Mode number.) |
| ❺ | Press two times to leave the SP mode and return to the copy window to resume normal operation. |
| ❻ | Press any Class 1 number to open a list of Class 2 SP modes. |
| ❼ | Press to scroll the show to the previous or next group. |
| ❽ | Press to scroll to the previous or next display in segments the size of the screen display (page). |
| ❾ | Press to scroll the show the previous or next line (line by line). |
| ❿ | Press to move the highlight on the left to the previous or next selection in the list. |



### *Switching Between SP Mode and Copy Mode for Test Printing*

1. In the SP mode, select the test print. Then press "Copy Window".
2. Use the copy window (copier mode), to select the appropriate settings (paper size, etc.) for the test print.
3. Press Start to start the test print.
4. Press SP Mode (highlighted) to return to the SP mode screen and repeat from step 1.

### *Selecting the Program Number*

Program numbers have two or three levels.

1. Refer to the Service Tables to find the SP that you want to adjust before you begin.
2. Press the Group number on the left side SP Mode window that contains the SP that you want to adjust.
3. Use the scrolling buttons in the center of the SP mode window to show the SP number that you want to open. Then press that number to expand the list.

4. Use the center touch-panel buttons to scroll to the number and title of the item that you want to set and press it. The small entry box on the right activates and shows the below default or the current settings.

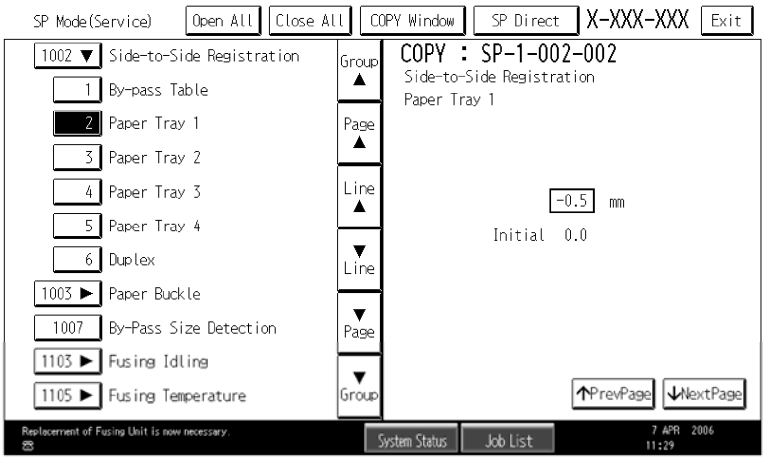


Note

- Refer to the Service Tables for the range of allowed settings.

1. Do this procedure to enter a setting:
   - Press ⊙/* to toggle between plus and minus and use the keypad to enter the appropriate number. The number you enter writes over the previous setting.
   - Press # to enter the setting. (The value is not registered if you enter a number that is out of range.)
   - Press “Yes” when you are prompted to complete the selection.
2. If you need to perform a test print, press Copy Window to open the copy window and select the settings for the test print. Press Start ⊙ and then press SP Mode (highlighted) in the copy window to return to the SP mode display.
3. Press Exit two times to return to the copy window when you are finished.

## *Exiting Service Mode*

Press the Exit key on the touch-panel.

## *Service Mode Lock/Unlock*

At locations where the machine contains sensitive data, the customer engineer cannot operate the machine until the Administrator turns the service mode lock off. This function makes sure that work on the machine is always done with the permission of the Administrator.

1. If you cannot go into the SP mode, ask the Administrator to log in with the User Tool and then set “Service Mode Lock” to OFF after he or she logs in:

User Tools > System Settings > Administrator Tools > Service Mode Lock > OFF

- This unlocks the machine and lets you get access to all the SP codes.
- The CE can service the machine and turn the machine off and on. It is not necessary to ask the Administrator to log in again each time the machine is turned on.

2. Go into the SP mode and set SP5169 to “1” if you must use the printer bit switches.
3. After machine servicing is completed:
   - Change SP5169 from “1” to “0”.
   - Turn the machine off and on. Tell the administrator that you have completed servicing the machine.
   - The Administrator will then set the “Service Mode Lock” to ON.

## 5.1.4 REMARKS

### *Display on the Control Panel Screen*

The maximum number of characters which can show on the control panel screen is limited to 30 characters. For this reason, some of the SP modes shown on the screen need to be abbreviated. The following are abbreviations used for the SP modes for which the full description is over 20 characters.

<table>
<tr><td colspan="2">Paper Weight<br>Thin paper: 60 g/m$^2$<br>Plain Paper: 60-90 g/m$^2$, 16-24lb.<br>Middle Thick: 91-105 g/m$^2$, 24-28lb.<br>Thick Paper 1: 106-169 g/m$^2$, 28.5-44.9lb.<br>Thick Paper 2: 170-220 g/m$^2$, 45-58lb.<br>Thick Paper 3: 221-256 g/m$^{2,}$ 59lb-68lb</td></tr>
<tr><td>Paper Type<br>N: Normal paper<br>MTH: Middle thick paper<br>TH: Thick paper</td><td>Paper Feed Station<br>P: Paper tray<br>B: By-pass table</td></tr>
<tr><td colspan="2">Color Mode [Color]<br>[K]: Black in B&W mode<br>[Y], [M], or [C]: Yellow, Magenta, or Cyan in Full Color mode<br>[YMC]: Only for Yellow, Magenta, and Cyan</td></tr>
</table>

| [FC]: Full Color mode<br>[FC, K], [FC, Y], [FC, M], or [FC, C]: Black, Yellow, Magenta, or Cyan in full color mode | |
|---|---|
| **Print Mode**<br>S: Simplex<br>D: Duplex | **Process Speed**<br>L: Low speed (77 mm/s)<br>M: Middle speed (154 mm/s) |

## *Others*

The following symbols are used in the SP mode tables.

**FA**: Factory setting

(Data may be adjusted from the default setting at the factory. Refer to the factory setting sheets enclosed. You can find it under the jammed paper removal decal.)

**DFU**: Design/Factory Use only

Do not touch these SP modes in the field.

A sharp (#) to the right hand side of the mode number column means that the main switch must be turned off and on to effect the setting change.

An asterisk (*) to the right hand side of the mode number column means that this mode is stored in the NVRAM. If you do a RAM clear, this SP mode will be reset to the default value.

“ENG” and “CTL” show which NVRAM contains the data.

- ENG: NVRAM on the BICU board
- CTL: NVRAM on the controller board

The settings of each SP mode are explained in the right-hand column of the SP table in the following way.

[Adjustable range / **Default setting** / Step] Alphanumeric

Note

- If “Alphanumeric” is written to the right of the bracket as shown above, the setting of the SP mode shows on the screen using alphanumeric characters instead of only numbers. However, the settings in the bracket in the SP mode table are explained by using only the numbers.

**SSP**: This denotes a “Special Service Program” mode setting.

# 5.2 FIRMWARE UPDATE

To update the firmware for this machine, you must have the new version of the firmware downloaded onto an SD (Secure Digital) Card. The SD Card is inserted into SD Card Slot 2 on the left rear side of the controller box.

## 5.2.1 TYPE OF FIRMWARE

There are 19 types of firmware as shown below.

| Type of firmware | Function | Location of firmware | Message shown |
|---|---|---|---|
| Engine | Printer engine control | BICU Flash ROM | Engine |
| System/Copy Application | Operating system | Flash ROM on the controller board | System/Copy |
| Netfile Application | Feature application | Flash ROM on the controller board | NetworkDocBox |
| Printer Application | Feature application | Flash ROM on the controller board | SD Printer |
| Scanner Application | Feature application | Flash ROM on the controller board | SD Scanner |
| Fax Application | Feature application | Flash ROM on the controller board | Fax |
| NIB | Network Interface | Flash ROM on the controller board | Network |
| Operation Panel | Panel control | Operation Panel | OpePanel. |
| Jam Animation | Jam animation | Flash ROM on the controller board | Animation |

| | | | |
|---|---|---|---|
| Fax FCU | Fax control | FCU | GWFCU 3-3 |
| Remote Fax | Fax control | Flash ROM on the controller board | Fax (option) |
| Language<br>(16 languages) | Language firmware<br>Two languages can be selected from 16 languages. | Operation Panel | LANG |
| WebDocBox | Document server application | Flash ROM on the controller board | Web Uapl |
| WebSys | Web Service application | Flash ROM on the controller board | Web Support |
| PS3 | Page description language (PostScript3) | PS3 SD card | Option PS3 |
| PictBridge | PictBridge control | PictBridge SD card | Option PctBrgd |
| DESS | Security control | Flash ROM on the controller board | Security Module |
| ARDF | ARDF control | ARDF | ADF |
| Finisher (B793) | Finisher control | Finisher (B793) | Finisher |

## 5.2.2 BEFORE YOU BEGIN

An SD card is a precision device. Always observe the following precautions when you handle SD cards:

- Always switch the machine off before you insert an SD card. Never insert the SD card into the slot with the power on.
- Do not remove the SD card from the service slot after the power has been switched on.
- Never switch the machine off while the firmware is downloading from the SD card.
- Keep SD cards in a safe location where they are not exposed to high temperature, high humidity, or exposure to direct sunlight.
- Always handle SD cards with care. Do not bend or scratch them. Do not let the SD card get exposed to shock or vibration.
- Make sure that the write protection of an SD card is unlocked when you download an application to it. If not, downloading fails and a download error (e.g. Error Code 44) occurs during a firmware upgrade.

Keep the following points in mind when you use the firmware update software:

- “Upload” means to send data from the machine to the SD card. “Download” means to send data from the SD card to the machine.
- To select an item on the LCD, touch the appropriate button on the soft touch-screen of the LCD, or, press the appropriate number key on the 10-key pad of the operation panel. For example, when “Exit (0)” shows on the screen you can touch the Exit button on the screen, or, press the ⓪ button on the operation panel of the copier.
- Make sure that the machine is disconnected from the network to prevent a print job for arriving while the firmware update is in progress before you start the firmware update procedure.

## 5.2.3 UPDATING FIRMWARE

### *Preparation*

- If the SD card is blank, copy the entire “romdata” folder onto the SD card.
- If the card already contains the “romdata” folder, copy the “D023” folder onto the card.

If the card already contains folders up to “D023”, copy the necessary firmware files (e.g. D023xxxx.fwu) into this folder.

Note

- Do not put multiple machine firmware programs on the same SD card. Copy the only model firmware you want.

### *Updating Procedure*

1. Turn the main power switch off.
2. Remove the slot cover (🖉 x 1).
3. Insert the SD card into SD Card Slot 2. Make sure the label on the SD card faces the front side of the machine.
4. Slowly push the SD card into the slot so it locks in place. You will hear it click. Make sure the SD card locks in place.

   Note

   - To remove the SD, push it in to unlock the spring lock. Then release it so it pops out of the slot.
5. Disconnect the network cable from the copier if the machine is connected to a network.
6. Switch the main power switch on. After about 45 seconds, the initial version update screen appears on the LCD in English.
7. On the screen, touch the button or press the corresponding number key on the operation panel to select the item in the menu that you want to update.

| ROM/NEW | What it means |
|---|---|
| ROM: | Tells you the number of the module and name of the version currently installed. The first line is the module number, the second line the version name. |
| NEW: | Tells you the number of the module and name version on the SD card. The first line is the module number, the second line the version name. |

Note

- Controller, engine and operation panel firmware cannot be updated at the same time. It is recommended to update firmware modules one by one.

8. Touch “UpDate (#)” (or #) to start the update.

Note

- The progress bar does not show for the operation panel firmware after you touch “OpPanel”. The power on key flashes on and off at 0.5 s intervals when the LCDC firmware is updating. The power key flashes on and off at 3 s intervals when the update is finished.

9. The "Update is Done" message appears on the operation panel after completing the updating. The message differs depending on the firmware that has been updated.
10. Switch the copier main power switch off when you see the “Update is Done” message or follow the procedure that is displayed on the operation panel.
11. Press in the SD card to release it. Then remove it from the slot.
12. Switch the copier on for normal operation.

### *Error Messages*

An error message shows in the first line if an error occurs during the download.
The error code consists of the letter “E” and a number. The example above shows error “E24” displayed. For details, refer to the Error Message Table. (☛ "Handling Firmware Update Error")

### *Firmware Update Error*

If a firmware update error occurs, this means the update was cancelled during the update because the module selected for update was not on the SD card.

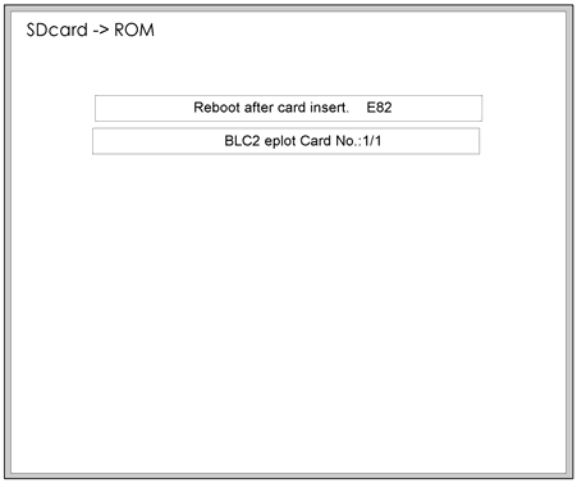

### *Recovery after Power Loss*

If the ROM update is interrupted as a result of accidental loss of power while the firmware is updating, then the correct operation of the machine cannot be guaranteed after the machine is switched on again. If the ROM update does not complete successfully for any reason, then in order to ensure the correct operation of the machine, the ROM update error will continue to show until the ROM is updated successfully.
In this case, insert the card again and switch on the machine to continue the firmware download automatically from the card without the menu display.

## 5.2.4 UPDATING THE LCDC FOR THE OPERATION PANEL

Do the following procedure to update the LCDC (LCD Control Board).

1. Turn the copier main switch off.
2. Remove the SD slot cover (🖉 x 1).
3. Insert the SD card into SD Card Slot 2.
4. Switch the copier main switch on.
5. The initial screen opens in English after about 45 seconds.
6. Touch “Ope Panel.xx”.
7. "xx" differs depending on the destination.
8. Touch “UpDate(#) or (#) to start the update.
9. Downloading starts after about 9 seconds.
10. The operation panel goes off and the main power on key flashes in red at 0.5 s intervals when the data is downloading. The same key starts flashing in green at 1 s intervals when the update is finished.
11. Switch the copier main power switch off and remove the SD card. Then switch the copier on.

## 5.2.5 DOWNLOADING STAMP DATA

The stamp data should be downloaded from the controller firmware to the hard disks at the following times:

- After the hard disks have been replaced.

The print data contains the controller software. Execute SP 5853 to download the fixed stamp data required by the hard disks.

1. Enter the SP mode.
2. Select SP5853 and then press “EXECUTE”. The following screen opens while the stamp data is downloading.

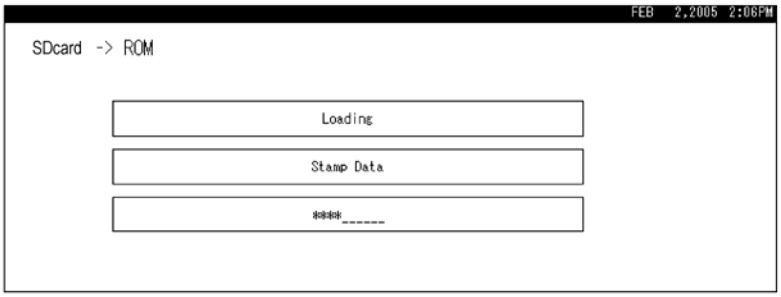


The download is finished when the message prompts you to close.

3. Press the “Exit” button. Then turn the copier off and on again.

## 5.2.6 NVRAM DATA UPLOAD/DOWNLOAD

### *Uploading Content of NVRAM to an SD card*

Do the following procedure to upload SP code settings from NVRAM to an SD card.

Note

- This data should always be uploaded to an SD card before the NVRAM is replaced.
- Make sure that the write protection of an SD card is unlocked

1. Do SP5990-001 (SMC Print) before you switch the machine off. You will need a record of the NVRAM settings if the upload fails.
2. Switch the copier main power switch off.
3. Remove the SD slot cover (🖉 x 1).
4. Insert the SD card into SD card slot 3. Then switch the copier on.
5. Execute SP5824-001 (NVRAM Data Upload) and then press the “Execute” key.
6. The following files are coped to an NVRAM folder on the SD card when the upload procedure is finished. The file is saved to the path and the following filename:

   **NVRAM¥<serial number>.NV**

   Here is an example with Serial Number “K5000017114”:

   **NVRAM¥K5000017114.NV**
7. In order to prevent an error during the download, be sure to mark the SD card that holds the uploaded data with the number of the machine from which the data was uploaded.

   Note

   - You can upload NVRAM data from more than one machine to the same SD card.

### *Downloading an SD Card to NVRAM*

Do the following procedure to download SP data from an SD card to the NVRAM in the machine.

- The NVRAM data down load may fail if the SD card with the NVRAM data is damaged, or if the connection between the controller and BICU is defective.
- Do the download procedure again if the download fails.
- Do the following procedure if the second attempt fails:
- Enter the NVRAM data manually using the SMC print you created before uploading the NVRAM data.

1. Switch the copier main power switch off.

2. Remove the SD slot cover (🔩 x 1).
3. Insert the SD card with the NVRAM data into SD Card Slot 3.
4. Switch the copier main power switch on.
5. Do SP5825-001 (NVRAM Data Download) and press the “Execute” key.

Note

- The serial number of the file on the SD card must match the serial number of the machine for the NVRAM data to download successfully. The download fails if the serial numbers do not match.

This procedure does not download the following data to the NVRAM:

- Total Count
- C/O, P/O Count

## 5.2.7 ADDRESS BOOK UPLOAD/DOWNLOAD

### *Information List*

The following information is possible to be uploaded and downloaded.

| Information | |
|---|---|
| ▪ Registration No.<br>▪ User Code<br>▪ E-mail<br>▪ Protection Code<br>▪ Fax Destination<br>▪ Fax Option<br>▪ Group Name<br>▪ Key Display | ▪ Select Title<br>▪ Folder<br>▪ Local Authentication<br>▪ Folder Authentication<br>▪ Account ACL<br>▪ New Document Initial ACL<br>▪ LDAP Authentication |

### *Download*

1. Prepare a formatted SD card.
2. Make sure that the write-protection on the SD card is off.
3. Turn off the main power switch of the main machine.
4. Remove the SD slot cover at the left rear side of the machine (🖉 x 1).
5. Install the SD card into SD card slot 2 (for service use).
6. Turn on the main power switch.
7. Enter the SP mode.
8. Do SP5-846-051 (Backup All Addr Book).
9. Exit the SP mode, and then turn off the main power switch.
10. Remove the SD card form SD card slot 2.
11. Install the SD slot cover.

Note

- If the capacity of SD card is not enough to store the local user information, an error message is displayed.
- Carefully handle the SD card, which contains user information. Do not take it back to your location.

### *Upload*

1. Turn off the main power switch of the main machine.
2. Remove the SD slot cover at the left rear side of the machine (🖉 x 1).
3. Install the SD card, which has already been uploaded, into SD card slot 2.
4. Turn on the main power switch.
5. Enter the SP mode.
6. Do SP5-846-052 (Restore All Addr Book).
7. Exit the SP mode, and then turn off the main power switch.
8. Remove the SD card form SD card slot 2.
9. Install the SD slot cover.

Note

- The counter in the user code information is initialized after uploading.
- The information of an administrator and supervisor cannot be downloaded nor uploaded.
- If there is no data of address book information in the SD card, an error message is displayed.

## 5.2.8 INSTALLING ANOTHER LANGUAGE

Many languages are available. But you can only switch between two languages at a time. Do the following procedure to select the two languages you want. You can select both of the languages you want from the user interface on the operation panel.

1. Switch the copier main power switch off.
2. Remove the SD slot cover (🖉 x 1).
3. Insert the SD card with the language data into SD Card Slot 3.
4. Switch the copier main power switch on. The initial screen opens after about 45 seconds.
5. Touch “Language Data (2)” on the screen (or press ②).

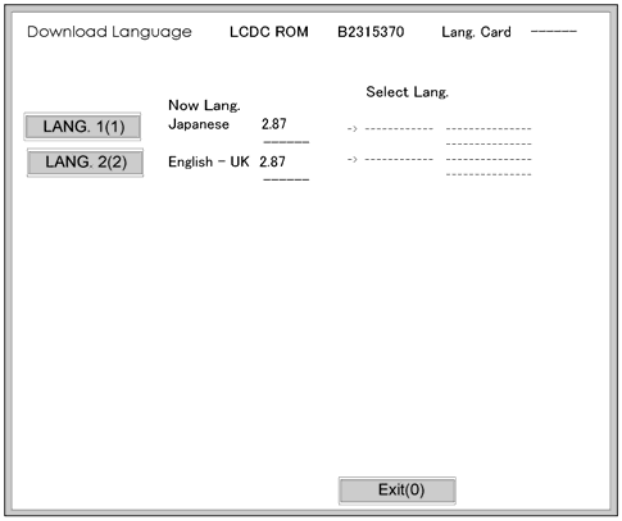


6. Touch “LANG. 1(1)” or “LANG. 2(2)"

| Key | What it does |
|---|---|
| LANG. 1(1) | Touch this button on the screen (or press ① on the 10-key pad) to open the next screen so you can select the 1st language. |
| LANG. 1(2) | Touch this button on the screen (or press ② on the 10-key pad) to open the next screen so you can select the 2nd language. |
| Exit(0) | Touch this key on the screen (or press ⓪ on the 10-key pad) to quit the update procedure and return to normal screen. |

7. Touch “LANG 1(1)” to select the 1st Language. Touch “LANG (2)” to select the 2nd Language.

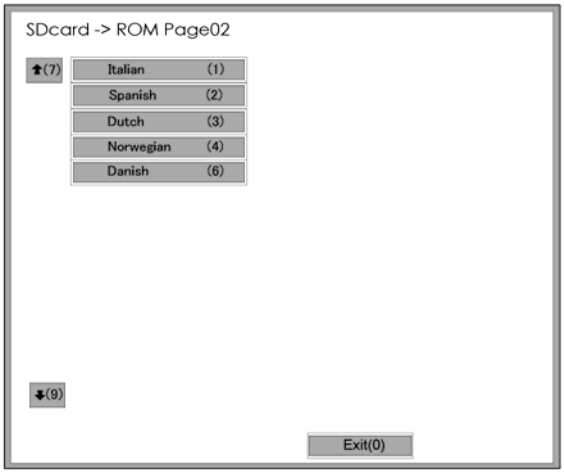


8. Touch the appropriate button on the screen (or press the number on the 10-keypad) to select a language as the 1st (or 2nd) language.
   - If a language is already selected, it will show in reverse.
   - Touching “Exit (0)” returns you to the previous screen.
9. If you do not see the language that you want to select, touch “↑(7)” or “↓(9)” on the screen (or press ⑦ or ⑨) to show more choices.

   The Download Screen opens after you select a language.

   The 1st or 2nd language selected for updating shows.

   The following show to right of the selection:
   - 1. The first column shows the language currently selected.
   - 2. The 2nd column shows the language selected to replace that language.

   The example below shows that the download will replace “Japanese” with “Italian” as the 1st language.

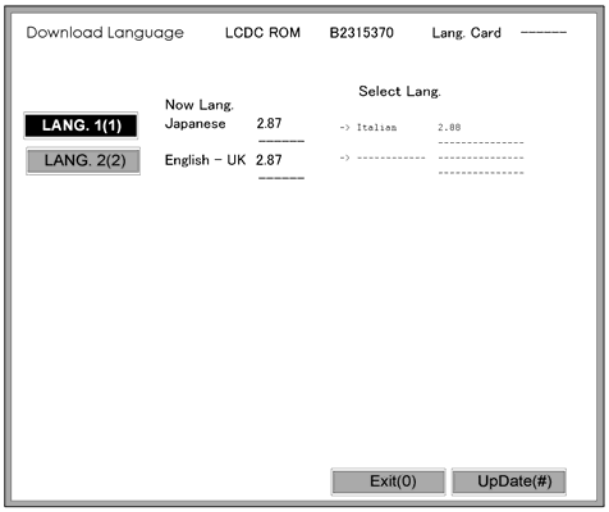


10. Touch “Update(#)” on the screen (or press #) to start the download.
    Another screen with a progress bar does not show when the language is downloading.
    The following occur at the time the language is downloading:
    - The operation panel switches off.
    - The LED on the power on key flashes rapidly.
11. After the message of installation completed has shown on the LCD, switch the copier main power switch off. Then remove the SD card from the slot.
12. Switch the copier main power switch on to resume normal operation.

## 5.2.9 HANDLING FIRMWARE UPDATE ERRORS

An error message shows in the first line if an error occurs during a download. The error code consists of the letter “E” and a number (“E20”, for example).

### *Error Message Table*

| Code | Meaning | Solution |
|---|---|---|
| 20 | Cannot map logical address | Make sure the SD card is inserted correctly. |
| 21 | Cannot access memory | HDD connection incorrect or replace hard disks. |
| 22 | Cannot decompress compressed data | Incorrect ROM data on the SD card, or data is corrupted. |
| 23 | Error occurred when ROM update program started | Controller program abnormal. If the second attempt fails, replace controller board. |
| 24 | SD card access error | Make sure SD card inserted correctly, or use another SD card. |
| 30 | No HDD available for stamp data download | HDD connection incorrect or replace hard disks. |
| 31 | Data incorrect for continuous download | Insert the SD card with the remaining data required for the download, the re-start the procedure. |
| 32 | Data incorrect after download interrupted | Execute the recovery procedure for the intended module download, then repeat the installation procedure. |
| 33 | Incorrect SD card version | Incorrect ROM data on the SD card, or data is corrupted. |
| 34 | Module mismatch - Correct module is not on the SD card) | SD update data is incorrect. Acquire the correct data (Japan, Overseas, OEM, etc.) then install again. |
| 35 | Module mismatch – Module | SD update data is incorrect. The data on the SD |

Firmware Update

| | | |
|---|---|---|
| | on SD card is not for this machine | card is for another machine. Acquire correct update data then install again. |
| 36 | Cannot write module – Cause other than E34, E35 | SD update data is incorrect. The data on the SD card is for another machine. Acquire correct update data then install again. |
| 40 | Engine module download failed | Replace the update data for the module on the SD card and try again, or replace the BICU board. |
| 42 | Operation panel module download failed | Replace the update data for the module on the SD card and try again, or replace the LCDC. |
| 43 | Stamp data module download failed | Replace the update data for the module on the SD card and try again, or replace the hard disks. |
| 44 | Controller module download failed | Replace the update data for the module on the SD card and tray again, or replace controller board. |
| 50 | Electronic confirmation check failed | SD update data is incorrect. The data on the SD card is for another machine. Acquire correct update data then install again. |

# 5.3 INSTALLING ANOTHER LANGUAGE

Many languages are available. But you can only switch between two languages at a time. Do the following procedure to select the two languages you want. You can select both of the languages you want from the user interface on the operation panel.

1. Switch the copier main power switch off.
2. Remove the SD slot cover (🖉 x 1).
3. Insert the SD card with the language data into SD Card Slot 2.
4. Switch the copier main power switch on. The initial screen opens after about 45 seconds.
5. Touch "Language Data (2)" on the screen (or press ②).

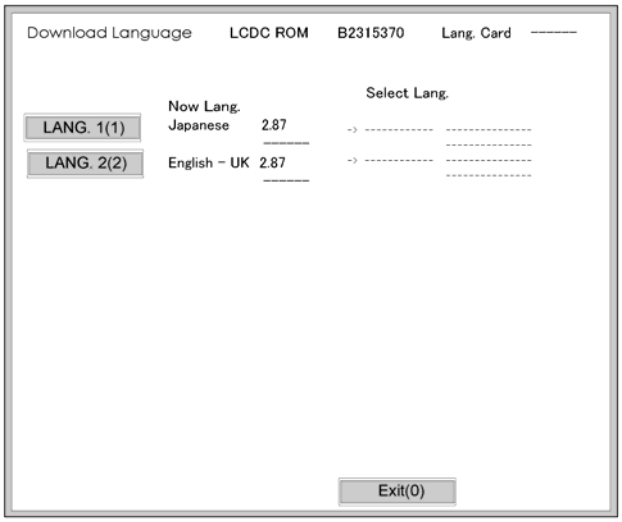


6. Touch "LANG. 1(1)" or "LANG. 2(2)"

| Key | What it does |
|---|---|
| LANG. 1(1) | Touch this button on the screen (or press ① on the 10-key pad) to open the next screen so you can select the 1st language. |
| LANG. 1(2) | Touch this button on the screen (or press ② on the 10-key pad) to open the next screen so you can select the 2nd language. |
| Exit(0) | Touch this key on the screen (or press ⓪ on the 10-key pad) to quit the update procedure and return to normal screen. |

7. Touch "LANG 1(1)" to select the 1st Language. Touch "LANG (2)" to select the 2nd

Installing Another Language

Language.

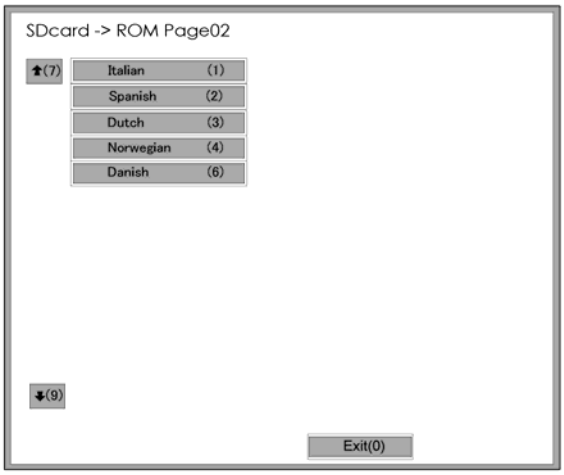


8. Touch the appropriate button on the screen (or press the number on the 10-keypad) to select a language as the 1st (or 2nd) language.
   - If a language is already selected, it will show in reverse.
   - Touching "Exit (0)" returns you to the previous screen.
9. If you do not see the language that you want to select, touch "↑(7)" or "↓(9)" on the screen (or press ⑦ or ⑨) to show more choices.

   The Download Screen opens after you select a language.

   The 1st or 2nd language selected for updating shows.

   The following show to right of the selection:
   - 1. The first column shows the language currently selected.
   - 2. The 2nd column shows the language selected to replace that language.

   The example below shows that the download will replace "Japanese" with "Italian" as the 1st language.

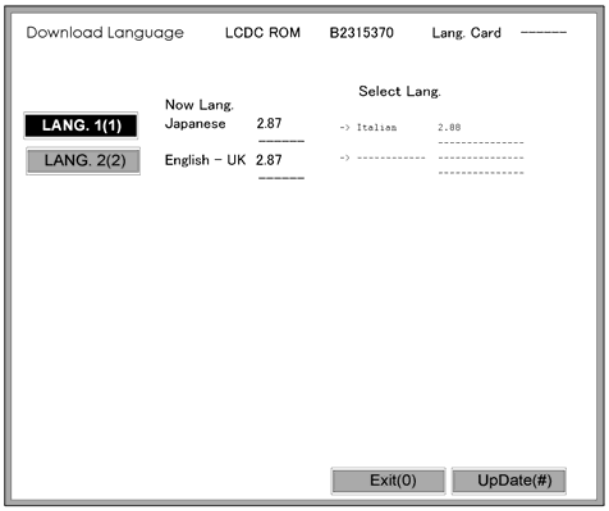


10. Touch "Update(#)" on the screen (or press ⓗ) to start the download.

Another screen with a progress bar does not show when the language is downloading.

The following occur at the time the language is downloading:

- The operation panel switches off.
- The LED on the power on key flashes rapidly.

11. After the message of installation completed has shown on the LCD, switch the copier main power switch off. Then remove the SD card from the slot.
12. Switch the copier main power switch on to resume normal operation.

# 5.4 REBOOT/SYSTEM SETTING RESET

## 5.4.1 SOFTWARE RESET

You can reboot the software with one of the following two procedures:

1. Turn the main power switch off and on.
2. Press and hold down (*/%) (#) together for over 10 seconds. When the machine beeps once, release both buttons. After “Now loading. Please wait” shows for a few seconds, the copy window will open. The machine is ready for normal operation.

## 5.4.2 SYSTEM SETTINGS AND COPY SETTING RESET

### *System Setting Reset*

The system settings in the UP mode can be reset to their defaults. Use the following procedure.

1. Press User Tools/Counter (◈/123).
2. Hold down (#) and then press System Settings.

Note

- You must press (#) first.

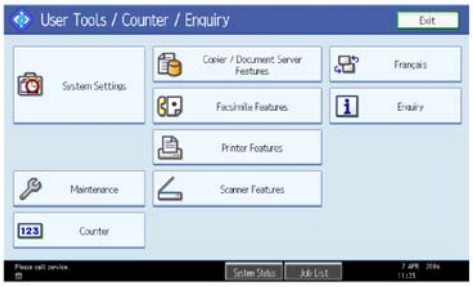


3. Press yes when the message prompts you to confirm that you want to reset the system settings.
4. Press exit when the message tells you that the settings have been reset.

### *Copier Setting Reset*

Use the following procedure to reset the copy settings in the UP mode to their defaults.

1. Press User Tools/Counter (◈/123).
2. Hold down (#) and then press Copier/Document Server Settings.

Note

- You must press (#) first.

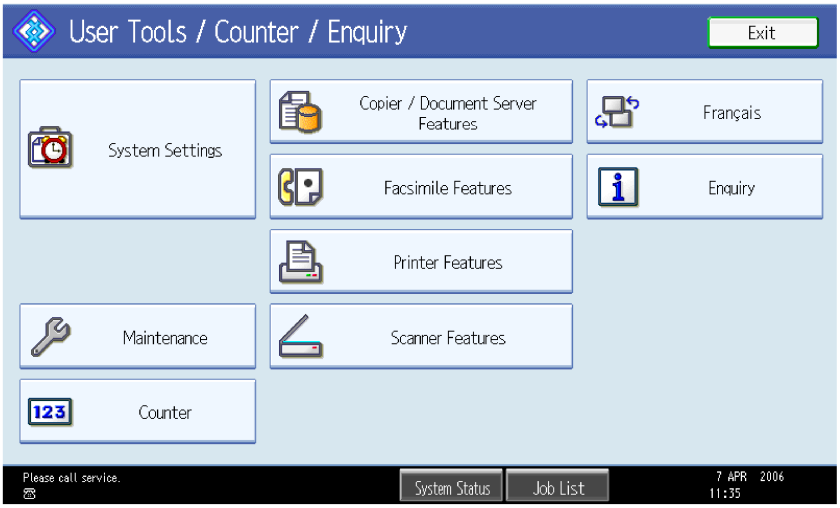


3. Press “Yes” when the message prompts you to confirm that you want to reset the Copier Document Server settings.
4. Press exit when the message tells you that the settings have been reset.

# 5.5 CONTROLLER SELF-DIAGNOSTICS

## 5.5.1 OVERVIEW

There are three types of self-diagnostics for the controller.

1. Power-on self-diagnostics: The machine automatically starts the self-diagnostics just after the power has been turned on.
2. SC detection: The machine automatically detects SC conditions at power-on or during operation.

The following shows the workflow of the power-on and detailed self-diagnostics.

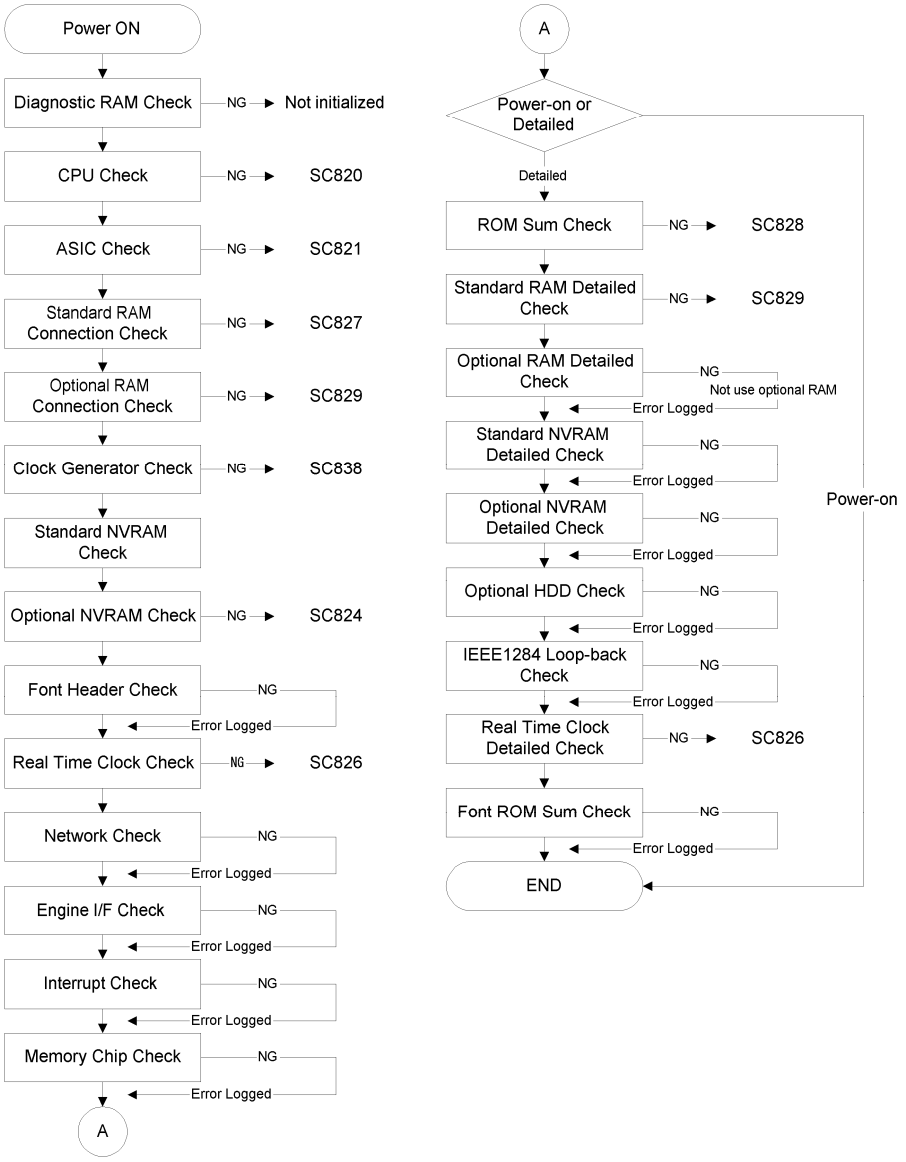

# 5.6 SD CARD APPLI MOVE

## 5.6.1 OVERVIEW

The service program “SD Card Appli Move” (SP5-873) lets you to copy application programs from one SD card to another SD card.

Slot 1 and Slot 2 are used to store application programs. However, more than two optional applications are supplied for this machine. In that case, you can move application programs from Slot 2 to Slot 1 with the following procedure.

Consider the following limitations when you try to merge SD cards.

- PostScript3 cannot be moved to the other SD card.
- The destination SD card should have the largest memory size of all the application SD cards. Refer to the following table for the memory size of each SD card.

**Outline of SD Card Appli Move:**

1. Choose a SD card with enough space.

   Note

   - Do not use an SD card if it has been used on a computer. Normal operation is not guaranteed when such an SD card is used.
2. Enter SP5873 “SD Card Appli Move”. Then move the application from the SD Card in Slot 2 to the card in slot 1.
3. Exit the SP mode

   Use caution when you do the SD Card Appli Move procedure:

   Note

   - The data necessary for authentication is transferred with the application program from an SD card to another SD card. Authentication fails if you try to use the SD card after you copy the application program from one card to another card.

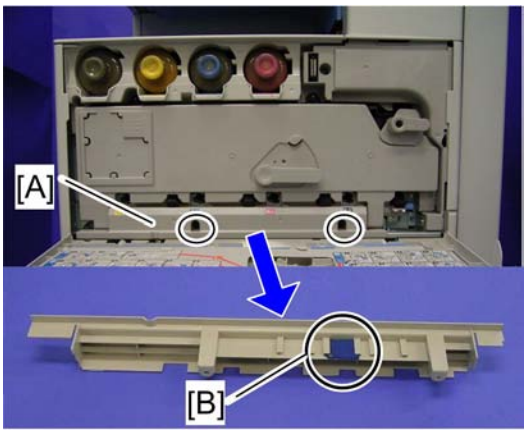


System Maintenance Reference

SD Card Appli Move

4. Remove the cover [A] (🔩 x 2).
5. Keep the SD card in the place [B] after you have copied the application program from one card to another card. This is done for the following reasons:
   - 1) The SD card can be the only proof that the user is licensed to use the application program.
   - 2) You may need to check the SD card and its data to solve a problem in the future.

## 5.6.2 MOVE EXEC

The menu “Move Exec” (SP5-873-001) lets you copy application programs from the original SD card to another SD card.

Important

- Do not turn ON the write protect switch of an application SD card on the machine. If the write protect switch is ON, a download error (e.g. Error Code 44) occurs during a firmware upgrade or application merge.

1. Turn the main switch off.
2. Make sure that an SD card is in SD Card Slot 1. The application program is copied into this SD card.
3. Insert the SD card (having stored the application program) to SD Card Slot 2. The application program is copied from this SD card.
4. Turn the main switch on.
5. Start the SP mode.
6. Select SP5-873-001 “Move Exec.”
7. Follow the messages shown on the operation panel.
8. Turn the main switch off.
9. Remove the SD card from SD Card Slot 2.
10. Turn the main switch on.
11. Check that the application programs run normally.

### 5.6.3 UNDO EXEC

The menu “Undo Exec” (SP5-873-002) lets you copy back application programs from an SD card to the original SD card. You can use this program when, for example, you have mistakenly copied some programs by using Move Exec (SP5-873-001).

Important

- Do not turn ON the write protect switch of an application SD card on the machine. If the write protect switch is ON, a download error (e.g. Error Code 44) occurs during a firmware upgrade or application merge.

1. Turn the main switch off.
2. Insert the original SD card in SD Card Slot 2. The application program is copied back into this card.
3. Insert the SD card (having stored the application program) to SD Card Slot 1. The application program is copied back from this SD card.
4. Turn the main switch on.
5. Start the SP mode.
6. Select SP5-873-002 “Undo Exec.”
7. Follow the messages shown on the operation panel.
8. Turn the main switch off.
9. Remove the SD card from SD Card Slot 2.

   Note

   - This step assumes that the application programs in the SD card are used by the machine.
10. Turn the main switch on.
11. Check that the application programs run normally.

# 5.7 DOWNLOADING STAMP DATA

The stamp data should be downloaded from the controller firmware to the hard disks at the following times:

- After the hard disks have been replaced.

The print data contains the controller software. Execute SP 5853 to download the fixed stamp data required by the hard disks.

1. Enter the SP mode.
2. Select SP5853 and then press “EXECUTE”. The following screen opens while the stamp data is downloading.

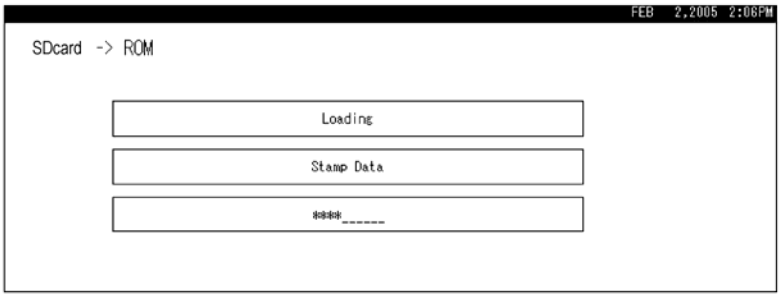


The download is finished when the message prompts you to close.

3. Press the “Exit” button. Then turn the copier off and on again.

# 5.8 NVRAM DATA UPLOAD/DOWNLOAD

## 5.8.1 UPLOADING CONTENT OF NVRAM TO AN SD CARD

Do the following procedure to upload SP code settings from NVRAM to an SD card.

Note

- This data should always be uploaded to an SD card before the NVRAM is replaced.
- Make sure that the write protection of an SD card is unlocked

1. Do SP5990-001 (SMC Print) before you switch the machine off. You will need a record of the NVRAM settings if the upload fails.
2. Switch the copier main power switch off.
3. Remove the SD slot cover (🖉 x 1).
4. Insert the SD card into SD card slot 2. Then switch the copier on.
5. Execute SP5824-001 (NVRAM Data Upload) and then press the “Execute” key.
6. The following files are coped to an NVRAM folder on the SD card when the upload procedure is finished. The file is saved to the path and the following filename:

   **NVRAM¥<serial number>.NV**

   Here is an example with Serial Number “K5000017114”:

   **NVRAM¥K5000017114.NV**
7. In order to prevent an error during the download, be sure to mark the SD card that holds the uploaded data with the number of the machine from which the data was uploaded.

   Note

   - You can upload NVRAM data from more than one machine to the same SD card.

System Maintenance Reference

## 5.8.2 DOWNLOADING AN SD CARD TO NVRAM

Do the following procedure to download SP data from an SD card to the NVRAM in the machine.

- The NVRAM data down load may fail if the SD card with the NVRAM data is damaged, or if the connection between the controller and BICU is defective.
- Do the download procedure again if the download fails.
- Do the following procedure if the second attempt fails:
- Enter the NVRAM data manually using the SMC print you created before uploading the NVRAM data.

1. Switch the copier main power switch off.
2. Remove the SD slot cover (🖉 x 1).
3. Insert the SD card with the NVRAM data into SD Card Slot 2.
4. Switch the copier main power switch on.
5. Do SP5825-001 (NVRAM Data Download) and press the “Execute” key.

Note

- The serial number of the file on the SD card must match the serial number of the machine for the NVRAM data to download successfully. The download fails if the serial numbers do not match.

This procedure does not download the following data to the NVRAM:

- Total Count
- C/O, P/O Count

# 5.9 ADDRESS BOOK UPLOAD/DOWNLOAD

## 5.9.1 INFORMATION LIST

The following information is possible to be uploaded and downloaded.

| Information | |
|---|---|
| ▪ Registration No.<br>▪ User Code<br>▪ E-mail<br>▪ Protection Code<br>▪ Fax Destination<br>▪ Fax Option<br>▪ Group Name<br>▪ Key Display | ▪ Select Title<br>▪ Folder<br>▪ Local Authentication<br>▪ Folder Authentication<br>▪ Account ACL<br>▪ New Document Initial ACL<br>▪ LDAP Authentication |

## 5.9.2 DOWNLOAD

1. Prepare a formatted SD card.
2. Make sure that the write-protection on the SD card is off.
3. Turn off the main power switch of the main machine.
4. Remove the SD slot cover at the left rear side of the machine (🖉 x 1).
5. Install the SD card into the SD card slot 2 (for service use).
6. Turn on the main power switch.
7. Enter the SP mode.
8. Do SP5-846-051 (Backup All Addr Book).
9. Exit the SP mode, and then turn off the main power switch.
10. Remove the SD card form the SD card slot 2.
11. Install the SD slot cover.

Note

- If the capacity of SD card is not enough to store the local user information, an error message is displayed.
- Carefully handle the SD card, which contains user information. Do not take it back to your location.

## 5.9.3 UPLOAD

1. Turn off the main power switch of the main machine.
2. Remove the SD slot cover at the left rear side of the machine (🖉 x 1).
3. Install the SD card, which has already been uploaded, into the SD card slot 2.
4. Turn on the main power switch.
5. Enter the SP mode.
6. Do SP5-846-052 (Restore All Addr Book).
7. Exit the SP mode, and then turn off the main power switch.
8. Remove the SD card form the SD card slot 2.
9. Install the SD slot cover.

Note

- The counter in the user code information is initialized after uploading.
- The information of an administrator and supervisor cannot be downloaded nor uploaded.
- If there is no data of address book information in the SD card, an error message is displayed.

# 5.10 USING THE DEBUG LOG

## 5.10.1 OVERVIEW

This machine provides a Save Debug Log feature that allows the Customer Engineer to save and retrieve error information for analysis.

Every time an error occurs, debug information is recorded in volatile memory. But this information is lost when the machine is switched off and on.

To capture this debug information, the Save Debug Log feature provides two main features:

- Switching on the debug feature so error information is saved directly to the HDD for later retrieval.
- Copying the error information from the HDD to an SD card.

Do the following procedure below to set up the machine so the error information is saved automatically to the HDD when a user has problems with the machine. Then ask the user to reproduce the problem.

## 5.10.2 SWITCHING ON AND SETTING UP SAVE DEBUG LOG

The debug information cannot be saved until the “Save Debug Log” function has been switched on and a target has been selected.

1. Enter the SP mode and switch the Save Debug Log feature on.
   - Press ⇧ then use the 10-key pad to enter ①⓪⑦.
   - Press and hold down C/⊘ for more than 3 seconds.
   - Touch “Copy SP”.
   - On the LCD panel, open SP5857.
2. Under “5857 Save Debug Log”, touch “1 On/Off”.

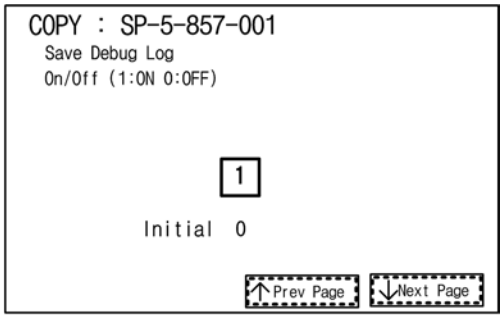


b178s001

3. On the control panel keypad, press “1”. Then press #. This switches the Save Debug Log feature on.

Note

- The default setting is “0” (OFF). This feature must be switched on in order for the debug information to be saved.

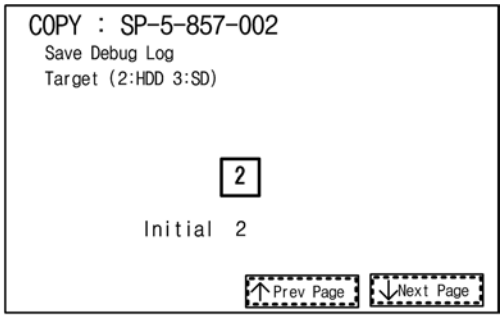


b178s002

4. Select the target destination where the debug information will be saved. Under “5857 Save Debug Log”, touch “2 Target”, enter “2” with the operation panel key to select the hard disk as the target destination. Then press #.

Note

- Select “3 SD Card” to save the debug information directly to the SD card if it is inserted in the service slot.

5. Now touch “5858” and specify the events that you want to record in the debug log. SP5858 (Debug Save When) provides the following items for selection.

| | | |
|---|---|---|
| **1** | Engine SC Error | Saves data when an engine-related SC code is generated. |
| **2** | Controller SC Error | Saves debug data when a controller-related SC Code is generated. |
| **3** | Any SC Error | Saves data only for the SC code that you specify by entering code number. |
| **4** | Jam | Saves data for jams. |

Note

- More than one event can be selected.

**Example 1: To Select Items 1, 2, 4**

Touch the appropriate items(s). Press “ON” for each selection. This example shows “Engine SC Error” selected.

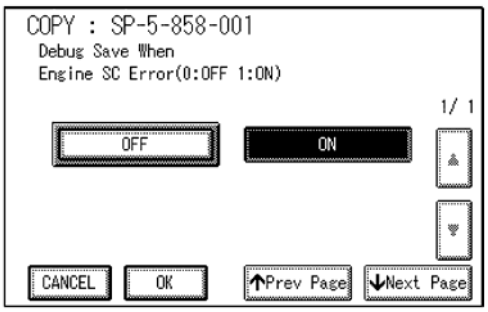


**Example 2: To Specify an SC Code**

Touch “3 Any SC Error”, enter the 3-digit SC code number with the control panel number keys. Then press #. This example shows an entry for SC670.

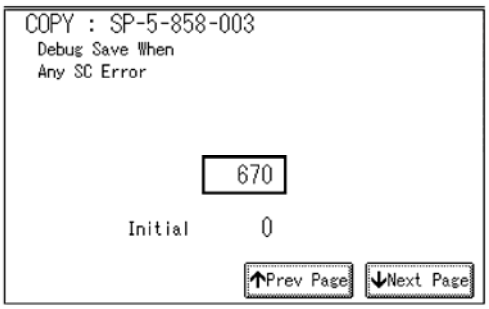


System Maintenance Reference

Using the Debug Log

Note

- For details about SC code numbers, please refer to the SC tables in Section 4. “Troubleshooting”.

6. Select one or more memory modules for reading and recording debug information.

   Touch “5859”.

   Under “5859” press the necessary key item for the module that you want to record.

   Enter the appropriate 4-digit number. Then press #.

   Note

   - Refer to the two tables below for the 4-digit numbers to enter for each key.

   The example below shows “Key 1” with “2222” entered.

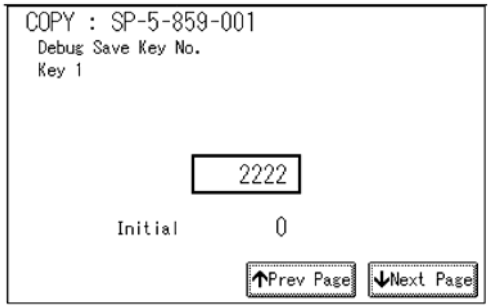


   The following keys can be set with the corresponding numbers. (The initials in parentheses indicate the names of the modules.)

**4-Digit Entries for Keys 1 to 10**

| Key No. | Copy | Printer | Scanner | Web |
|---|---|---|---|---|
| 1 | 2222 (SCS) | | | |
| 2 | 14000 (SRM) | | | |
| 3 | 256 (IMH) | | | |
| 4 | 1000 (ECS) | | | |
| 5 | 1025 (MCS) | | | |
| 6 | 4848 (COPY) | 4400 (GPS) | 5375 (Scan) | 5682 (NFA) |
| 7 | 2224 (BICU) | 4500 (PDL) | 5682 (NFA) | 6600 (WebDB) |

| | | | | |
|---|---|---|---|---|
| 8 | | 4600 (GPS-PM) | 3000 (UCS) | 3300 (PTS) |
| 9 | | 2000 (NCS) | 2000 (NCS) | 6666 (WebSys) |
| 10 | | 2224 (BICU) | 4126 (DCS) | 2000 (NCS) |

Note

- The default settings for Keys 1 to 10 are all zero ("0").

**Key to Acronyms**

| Acronym | Meaning | Acronym | Meaning |
|---|---|---|---|
| ECS | Engine Control Service | NFA | Net File Application |
| GPS | GW Print Service | PDL | Printer Design Language |
| GSP-PM | GW Print Service – Print Module | PTS | Print Server |
| IMH | Image Memory Handler | SCS | System Control Service |
| MCS | Memory Control Service | SRM | System Resource Management |
| NCS | Network Control Service | WebDB | Web Document Box (Document Server) |

1. The machine is now set to record the debugging information automatically on the HDD (the target selected with SP5857-002) for the events that you selected with SP5858 and the memory modules selected with SP5859.

Please keep the following important points in mind when you do this setting:

- Note that the number entries for Keys 1 to 5 are the same for the Copy, Printer, Scanner, and Web memory modules.
- The initial settings are all zero.
- These settings remain in effect until you change them. Be sure to check all the settings, especially the settings for Keys 6 to 10. To switch off a key setting, enter a zero for that key.

Using the Debug Log

- You can select any number of keys from 1 to 10 (or all) by entering the corresponding 4-digit numbers from the table.
- You cannot mix settings for the groups (COPY, PRINTER, etc.) for 006 to 010. For example, if you want to create a PRINTER debug log you must select the settings from the 9 available selections for the “PRINTER” column only.
- One area of the disk is reserved to store the debug log. The size of this area is limited to 4 MB.

### 5.10.3 RETRIEVING THE DEBUG LOG FROM THE HDD

Retrieve the debug log by copying it from the hard disk to an SD card.

1. Insert the SD card into slot 2 (service slot) of the copier.
2. Enter the SP mode and execute SP5857-009 (Copy HDD to SD Card (Latest 4 MB)) to write the debugging data to the SD card.
3. Use a card reader to copy the file and send it for analysis to your local Ricoh representative by email. You can also send the SD card by regular mail if you want.

## 5.10.4 RECORDING ERRORS MANUALLY

SC errors and jams only are recorded to the debug log automatically. Please instruct the user to do the following immediately after occurrence to save the debug data for any other errors that occur while the customer engineer is not on site. Such problems also include a controller or panel freeze.

Note

- You must previously switch on the Save Debug Feature (SP5857-001) and select the hard disk as the save destination (SP5857-002) if you want to use this feature.

1. Press (Clear Modes).on the operation panel when the error occurs.
2. On the control panel, enter “01”. Then hold down for at least 3 seconds until the machine beeps and then release it. This saves the debug log to the hard disk for later retrieval with an SD card by the service representatives.
3. Switch the machine off and on to resume operation.
   The debug information for the error is saved on the hard disk. This lets the service representative retrieve it on their next visit by copying it from the HDD to an SD card.

## 5.10.5 NEW DEBUG LOG CODES

### *SP5857-015 Copy SD Card-to-SD Card: Any Desired Key*

This SP copies the log on an SD card (the file that contains the information written directly from shared memory) to a log specified by key number. The copy operation is executed in the log directory of the SD card inserted in the same slot. (This function does not copy from one slot to another.) Each SD card can hold up to 4 MB of file data. Unique file names are created for the data during the copy operation to prevent overwriting files of the same name. This means that log data from more than one machine can be copied onto the same SD card. This command does not execute if there is no log on the HDD for the name of the specified key.

### *SP5857-016 Create a File on HDD to Store a Log*

This SP creates a 32 MB file to store a log on the HDD. However, this is not a completely empty file. The created file will hold the number “2225” as the SCS key number and other non-volatile information. Even if this SP is not executed, a file is created on the HDD when the first log is stored on the HDD (it takes some time to complete this operation). This creates the possibility that the machine may be switched off and on before the log can be created completely. If you execute this SP to create the log file beforehand, this will greatly reduce the amount of time required to acquire the log information and save onto the HDD. With the file already created on the HDD for the log file, the data only needs to be recorded. A new log file does not need to be created. To create a new log file, do SP5857-011 to delete the debug log data from the HDD. Then do SP5857-016.

### *SP5857-017 Create a File on SD Card to Store a Log*

This SP creates a 4 MB file to store a log on an SD card. However, this is not a completely empty file. The created file will hold the number “2225” as the SCS key number and other non-volatile information. Even if this SP is not executed, a file is created on the SD card when the first log is stored on the SD card (it takes some time to complete this operation). This creates the possibility that the machine may be switched off and on before the log can be created completely. If you execute this SP to create the log file beforehand, this will greatly reduce the amount of time required to acquire the log information and save onto the SD card. With the file already created on the SD card for the log file, the data only needs to be recorded; a new log file does not require creation. To create a new log file, do SP5857-012 to delete the debug log data from the SD card. Then do SP5857-017.

# 5.11 CARD SAVE FUNCTION

## 5.11.1 OVERVIEW

### *Card Save:*

- The Card Save function is used to save print jobs received by the printer on an SD card with no print output. Card Save mode is toggled using printer Bit Switch #1 bit number 4. Card Save will remain enabled until the SD card becomes full, or until all file names have been used.
- Captures are stored on the SD card in the folder /prt/cardsave. File names are assigned sequentially from PRT00000.prn to PRT99999.prn. An additional file PRT.CTL will be created. This file contains a list of all files created on the card by the card save function.
- Previously stored files on the SD card can be overwritten or left intact. Card Save SD has “Add” and “New” menu items.
  - **Card Save (Add):** Appends files to the SD Card. Does not overwrite existing files. If the card becomes full or if all file names are used, an error will be displayed on the operation panel. Subsequent jobs will not be stored.
  - **Card Save (New):** Overwrites files in the card's /prt/cardsave directory.

**Limitation:**

- Card Save cannot be used with PJL Status Readback commands. PJL Status Readbacks will not work. In addition they will cause the Card Save to fail.

## 5.11.2 PROCEDURE

1. Turn the main power switch OFF.
2. Insert the SD card into slot 2. Then turn the power ON.
3. Enter SP mode.
4. Select the “Printer Sp”.
5. Select SP-1001 "Bit Switch”.

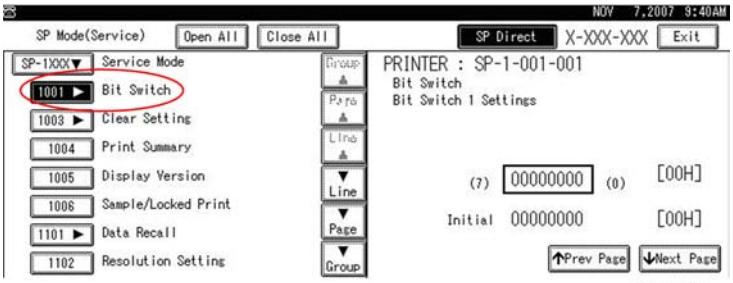

d027t101

6. Select “Bit Switch 1 Settings” and use the numeric keypad to turn bit 4 ON and then press the “#” button to register the change. The result should look like: **00010000**. By doing this, Card Save option will appear in the “List/Test Print” menu.

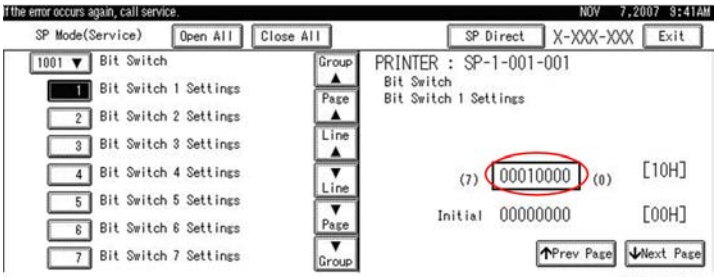

d027t102

7. Press “Exit” to exit SP Mode.
8. Press the “User Tools/Counter” button.

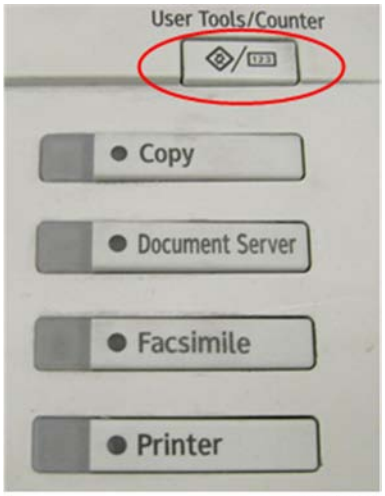


d027t103

9. Select “Printer Features”.

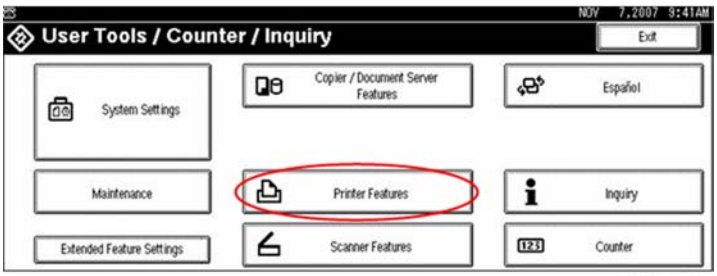


d027t105

10. Card Save (Add) and Card Save (New) should be displayed on the screen. Select Card Save (Add) or Card Save (New).

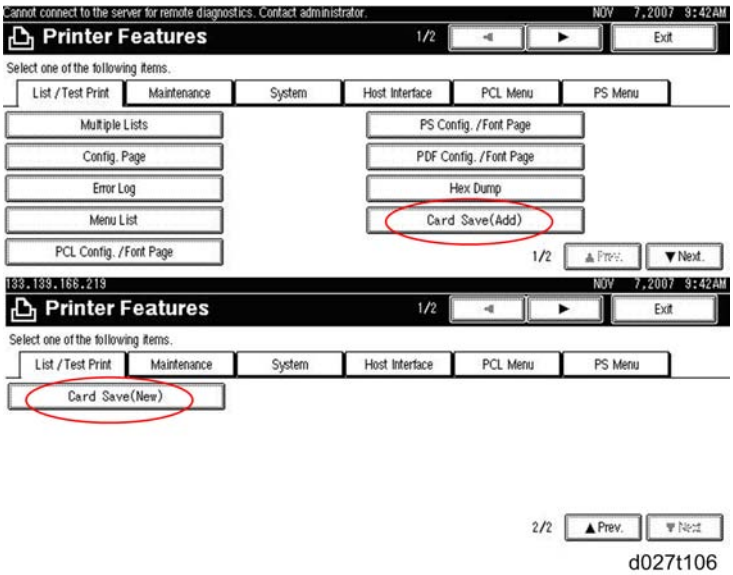


d027t106

11. Press “OK” and then exit the “User Tools/Counter” menu.

Card Save Function

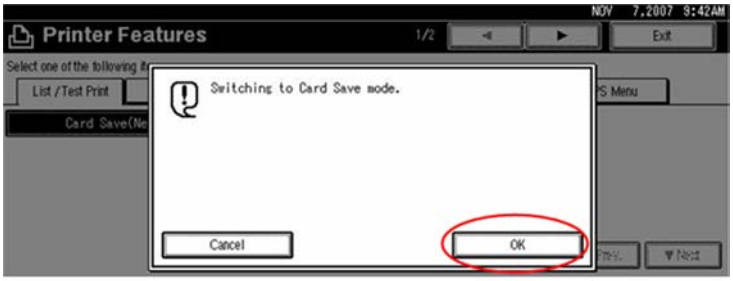


d027t107

12. Press the “Printer” button.

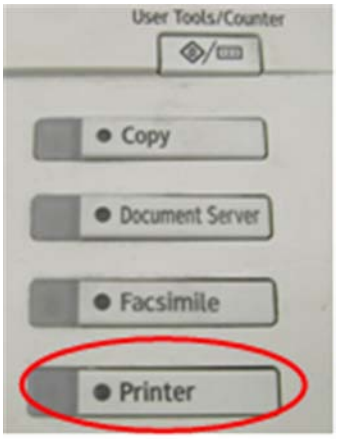


d027t108

13. Card Save should be displayed in the top left of the display panel.

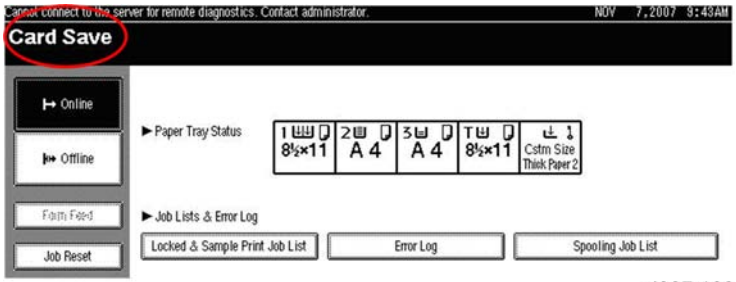


d027t109

14. Send a job to the printer. The Communicating light should start blinking as shown below.

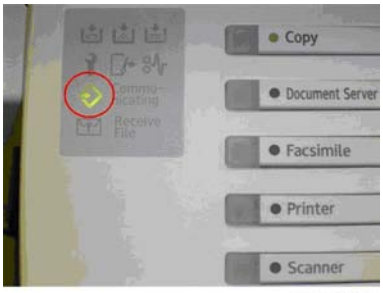


d027t110

15. As soon as the printer receives the data, it will be stored on the SD card automatically

with no print output. Nothing is displayed on the screen, indicating that a Card Save operation was successful.

16. Press “Offline” and then the “Clear/Stop” button to exit Card Save mode.

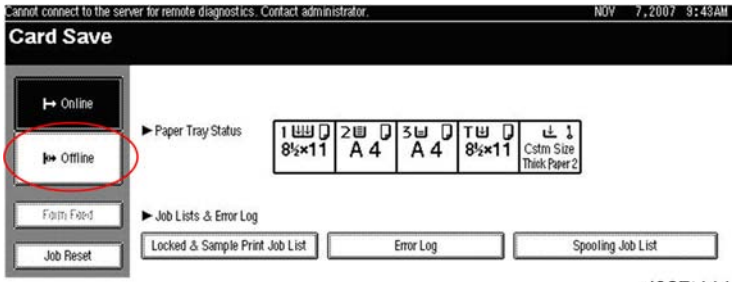


d027t111

17. Change the Bit Switch Settings back to the default **00000000**. Press the “#” button in the numeric keypad to register the changes.
18. Remove the SD card after the main power switch is turned off.

### 5.11.3 ERROR MESSAGES

Card Save error messages:

- **Init error:** A card save process (e.g. card detection, change to kernel mode) failed to initialize.
- **Card not found:** Card cannot be detected in the slot.
- **No memory:** Insufficient working memory to process the job.
- **Write error:** Failed to write to the card.
- **Other error:** An unknown error occurred.

If an error occurs, pressing “OK” will cause the device to discard the job and return to the ready state.

# TROUBLESHOOTING

| SECTION 6 TROUBLESHOOTING REVISION HISTORY | | |
|---|---|---|
| **Page** | **Date** | **Added/Updated/New** |
| | | None |

# 6. TROUBLESHOOTING

## 6.1 SERVICE CALL CONDITIONS

See "Appendices" for the following information:

- SC Tables

## 6.2 PROCESS CONTROL ERROR CONDITIONS

See "Appendices" for the following information:

- Developer Initialization Result
- Process Control Self-Check Result
- Line Position Adjustment Result

# 6.3 TROUBLESHOOTING GUIDE

See "Appendices" for the following information:

- Image Quality
- Line Position Adjustment

## 6.3.1 STACK PROBLEM IN THE 1-BIN TRAY

If a stack problem occurs on the 1-bin tray, raise the guide on the 1-bin tray.

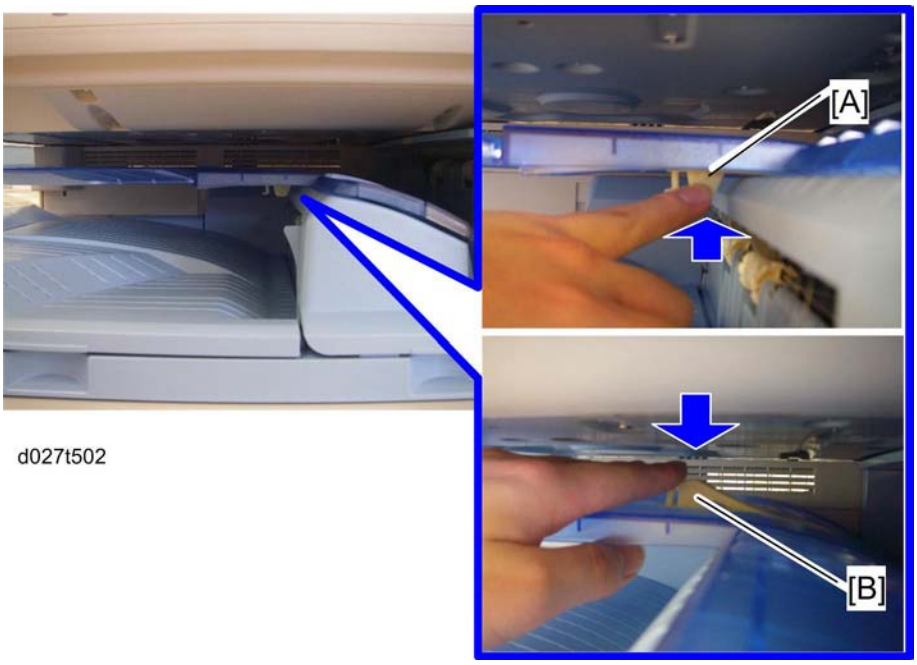


d027t502

**If a stack problem occurs;**

- Push the guide to lift the guide [A].

**If another type or size of paper is used;**

Press down the guide [B].

## 6.4 JAM DETECTION

See "Appendices" for the following information:

- Paper Jam Display
- Jam Codes and Display Codes
  (Paper Size Code)
  (Sensor Locations)

# 6.5 ELECTRICAL COMPONENT DEFECTS

See "Appendices" for the following information:

- Sensors
- Blown Fuse Conditions
  (Power Supply Unit)

# 6.6 SCANNER TEST MODE

## 6.6.1 SBU TEST MODE

Output the SBU test pattern with SP4-807-001 to make sure the scanner SBU control operates correctly. The SBU test pattern prints out after you have set the SP mode settings and pressed the start key.

- The CCD on the SBU board may be defective if the copy is abnormal and the SBU test pattern is normal.
- The followings can be the cause if the copy is normal and the SBU test pattern is abnormal:
  - The harness may not be correctly connected between the SBU and the BICU.
  - The BICU or SBU board may be defective.

## 6.6.2 IPU TEST MODE

You can check the BICU board with the SP mode menu, SP4-904-1.
If no error is detected, the test ends. Then the completion code shows in the operation panel display. If an error is detected, the test is interrupted. Then an error code shows. The table below lists the completion and error codes.

### *SP4-904-1 Register Access*

There are 16 bits switches in this SP. Each bit indicates a different CPU. The error result is displayed on the operation panel as a decimal number.
0: Normal, 1: Error

### *SP4-904-2 Image Path*

There are 16 bits switches in this SP. Each bit indicates a different CPU path. The error result is displayed on the operation panel as a decimal number.
0: Normal, 1: Error
Errors may be caused by the following problems:

1. Short circuit on the signal lines
   - When the BICU board is installed, a pin or two on the ASIC is damaged.
   - Some conductive matter or object is trapped among the pins.
   - Condensation
2. Destruction of circuit elements
   - Over current or a defective element breaks the circuit.

3. Abnormal power supply

   •The required voltage is not supplied to the devices.

4. Overheat/overcooling

   - The environment is inappropriate for the board (the scanner unit).

5. Static electricity

   - Static electricity of a high voltage occurs during the test.

6. Others

   - The scanner and BICU are incorrectly connected.

When you have completed a check, turn the main switch off and on before you do another check. When you have completed all necessary checks, turn the main switch off and on.

# D023/D025
# SERVICE MANUAL APPENDICES

# D023/D025 APPENDICES

## TABLE OF CONTENTS


**1. APPENDIX: SPECIFICATIONS ..... 1-1**

1.1 MAIN FRAME ..... 1-1

1.2 PRINTER ..... 1-6

1.3 SCANNER ..... 1-8

1.4 SUPPORTED PAPER SIZES ..... 1-9

1.4.1 PAPER FEED ..... 1-9

North America ..... 1-9

Europe/ Asia ..... 1-12

1.4.2 PAPER EXIT ..... 1-15

1000-Sheet Booklet Finisher ..... 1-15

1000-Sheet Finisher and 500-Sheet Finisher ..... 1-18

1.4.3 PLATEN/ARDF ORIGINAL SIZE DETECTION ..... 1-22

1.5 SOFTWARE ACCESSORIES ..... 1-24

1.5.1 PRINTER DRIVERS ..... 1-24

1.5.2 SCANNER AND LAN FAX DRIVERS ..... 1-25

1.5.3 UTILITY SOFTWARE ..... 1-26

1.6 OPTIONAL EQUIPMENT ..... 1-27

1.6.1 ARDF (D366) ..... 1-27

1.6.2 PAPER FEED UNIT (D387) ..... 1-28

1.6.3 PAPER FEED UNIT (D351) ..... 1-28

1.6.4 LCT 2000-SHEET (D352) ..... 1-29

1.6.5 LCT 1200-SHEET (D353) ..... 1-29

1.6.6 1000-SHEET BOOKLET FINISHER & PUNCH UNIT (B793) ..... 1-30

1.6.7 1000-SHEET FINISHER (B408) ..... 1-32

Upper Tray ..... 1-32

Lower Tray ..... 1-33

1.6.8 500-SHEET FINISHER (D372) ..... 1-34

500-Sheet Finisher ..... 1-34

1.6.9 BRIDGE UNIT (D386) ..... 1-36

1.6.10 SHIFT TRAY (D388) ..... 1-37
1.6.11 1-BIN TRAY UNIT (D414) ..... 1-37

**2. APPENDIX: MAINTENANCE TABLES ..... 2-1**
2.1 MAINTENANCE TABLES ..... 2-1
2.1.1 PREVENTIVE MAINTENANCE ITEMS ..... 2-1
Mainframe ..... 2-1
ARDF (D366)..... 2-5
One-tray Paper Feed Unit (D387) ..... 2-5
Two-tray Paper Feed Unit (D351) ..... 2-6
1200-sheet LCT (D353)..... 2-7
2000-sheet LCT (D352)..... 2-7
1000-Sheet Booklet Finisher (B793) ..... 2-8
1000-Sheet Booklet Finisher Punch Kit (B807) ..... 2-8
1000-Sheet Finisher (B408) ..... 2-8
1 Bin Tray (D414) ..... 2-9
Bridge Unit (D386)..... 2-9
Shift Tray (D388) ..... 2-9
2.1.2 OTHERS YIELD PARTS..... 2-10
Mainframe ..... 2-10
ARDF ..... 2-10

**3. APPENDIX: SERVICE CALL CONDITIONS ..... 3-1**
3.1 SC TABLES ..... 3-1
3.1.1 SERVICE CALL CONDITIONS..... 3-1
Summary..... 3-1
SC Code Classification..... 3-2
3.1.2 SC1XX: SCANNING ..... 3-5
3.1.3 SC 2XX: EXPOSURE ..... 3-10
3.1.4 SC3XX: IMAGE PROCESSING – 1..... 3-16
3.1.5 SC4XX: IMAGE PROCESSING - 2..... 3-21
3.1.6 SC5XX: PAPER FEED AND FUSING ..... 3-26
3.1.7 SC6XX: DEVICE COMMUNICATION..... 3-45
3.1.8 SC7XX: PERIPHERALS ..... 3-55
3.1.9 SC8XX: OVERALL SYSTEM ..... 3-71
3.1.10 SC9XX: MISCELLANEOUS ..... 3-85

**4. APPENDIX: PROCESS CONTROL ERROR CONDITIONS ..... 4-1**
4.1 PROCESS CONTROL ERROR CONDITIONS ..... 4-1
4.1.1 DEVELOPER INITIALIZATION RESULT ..... 4-1
4.1.2 PROCESS CONTROL SELF-CHECK RESULT ..... 4-3
Vsg Adjustment Result ..... 4-5
4.1.3 LINE POSITION ADJUSTMENT RESULT ..... 4-6

**5. APPENDIX: TROUBLESHOOTING GUIDE ..... 5-1**
5.1 TROUBLESHOOTING GUIDE ..... 5-1
5.1.1 IMAGE QUALITY ..... 5-1
5.1.2 LINE POSITION ADJUSTMENT ..... 5-3
Test ..... 5-3
Countermeasure list for color registration errors ..... 5-3

**6. APPENDIX: JAM DETECTION ..... 6-1**
6.1 JAM DETECTION ..... 6-1
6.1.1 PAPER JAM DISPLAY ..... 6-1
6.1.2 JAM CODES AND DISPLAY CODES ..... 6-2
Paper Size Code ..... 6-10
Sensor Locations ..... 6-11

**7. APPENDIX: ELECTRICAL COMPONENT DEFECTS ..... 7-1**
7.1 ELECTRICAL COMPONENT DEFECTS ..... 7-1
7.1.1 SENSORS ..... 7-1
7.1.2 BLOWN FUSE CONDITIONS ..... 7-9
Power Supply Unit ..... 7-9
IH Inverter ..... 7-10

**8. APPENDIX: SP MODE TABLES ..... 8-1**
8.1 SYSTEM SERVICE MODE ..... 8-1
8.1.1 SERVICE MODE TABLE ..... 8-1
SP1-XXX (Feed) ..... 8-1
SP2-XXX (Drum) ..... 8-28
SP3-XXX (Process) ..... 8-139
SP4-XXX (Scanner) ..... 8-194
SP5-XXX (Mode) ..... 8-221
SP6-XXX (Peripherals) ..... 8-297

SP7-XXX (Data Log) ..... 8-309
SP8-xxx: Data Log2 ..... 8-347
SP9-XXX: Others ..... 8-410
8.1.2 INPUT CHECK TABLE ..... 8-414
Copier ..... 8-414
ADF (B802) ..... 8-420
1000-Sheet Booklet Finisher (B793) ..... 8-422
1000-Sheet Finisher (B408) ..... 8-425
500-Sheet Finisher (D372) ..... 8-427
Bridge Unit (D386) ..... 8-428
Internal Shift Tray (D388) ..... 8-428
1 Bin Tray (D414) ..... 8-429
Two-Tray Paper Feed Unit (D351) / 1200 LCIT (D353) ..... 8-430
Table 1: Paper Height Sensor ..... 8-431
Table 2: Paper Size Switch (Tray 2) ..... 8-432
Table 3: Paper Size (By-pass Table) ..... 8-433
Table 4: APS Original Size Detection ..... 8-434
8.1.3 OUTPUT CHECK TABLE ..... 8-435
Copier ..... 8-435
ARDF (B802) ..... 8-445
1000-Sheet Booklet Finisher (D372) ..... 8-446
1000-Sheet Finisher (B408) ..... 8-447
500-Sheet Finisher (D372) ..... 8-448
Bridge Unit (D386) ..... 8-449
Shift Tray (D388) ..... 8-449
1 Bin Tray (D414) ..... 8-449
Two-Tray Paper Feed Unit (D351) / 2000 LCT (D352) / 1200 LCT (D353) ..... 8-450
8.1.4 TEST PATTERN PRINTING ..... 8-452
8.2 PRINTER SERVICE MODE ..... 8-454
8.2.1 SP1-XXX (SERVICE MODE) ..... 8-454
8.3 SCANNER SP MODE ..... 8-463
8.3.1 SP1-XXX (SYSTEM AND OTHERS) ..... 8-463
8.3.2 SP2-XXX (SCANNING-IMAGE QUALITY) ..... 8-464

# Appendix:

# Specifications

| APPENDIX 1 SPECIFICATIONS | | |
|---|---|---|
| **Page** | **Date** | **Added/Updated/New** |
| 30 | 06/26/2009 | Saddlestitch |

# 1. APPENDIX: SPECIFICATIONS

## 1.1 MAIN FRAME

| | |
|---|---|
| Configuration: | Desktop |
| Print Process: | Laser beam scanning & Dry electrostatic transfer system<br>4 drums tandem method |
| Number of scans: | 1 |
| Resolution: | Scan: 600 dpi<br>Print: 600 dpi |
| Gradation: | Scan: 600dpi / 10bits/pixel<br>Print: 600dpi / 4 bits/pixel |
| Original type: | Sheets, book, objects |
| Maximum original size: | A3/11" x 17" |

Main Frame

| | |
|---|---|
| Original reference position: | Left rear corner, ad hoc lists |
| Copy speed: | Plain (ADF 1 to 1, LT/ A4 LEF)<br>C2a: 28 cpm (color/black & white)<br>C2b: 33 cpm (color/black & white)<br>Thick 1 (169 g/m$^2$ or less)<br>C2a: 16 cpm (color/black & white)<br>C2b 16 cpm (color/black & white)<br>Thick 2 (220 g/m$^2$ or less)<br>C2a: 16 cpm (color/black & white)<br>C2b 16 cpm (color/black & white)<br>Thick 3 (256 g/m$^2$ or less)<br>C2a: 16 cpm (color/black & white)<br>C2b 16 cpm (color/black & white)<br>OHP, Glossy (1200 dpi)<br>C2a: 16 cpm (color/black & white)<br>C2b 16 cpm (color/black & white) |
| First copy (normal mode): | C2a/ b<br>Color: 8 seconds or less (A4/LT LEF)<br>Black & white: 5 seconds or less (A4/LT LEF) |
| Warm-up time: | NA: 29 seconds or less (20°C)<br>EU: 27 seconds or less (20°C) |
| Print Paper Capacity: (80 g/m$^2$, 20 lb) | Standard tray: 550 sheets x 2 + 100<br>By-pass tray: 100 sheets (Normal), 40 sheets (Thick 1: 106 - 169g/m$^2$), 20 sheets (Thick 2/3: 170 - 256 g/m$^2$), 35 sheets (Postcard)<br>Optional paper feed tray: 550 sheets x 2<br>2000-sheet LCT: 2000 sheets<br>1200-sheet LCT: 1200 sheets |

| | | | |
|---|---|---|---|
| Print Paper Size: | (Refer to “Supported Paper Sizes”.) | | |
| | - | Minimum | Maximum |
| | Tray 1 | A4/8.5" x 11" (LEF) | |
| | Tray 2 | A5 (LEF)/<br>8.5" x 11" | A3/11" x 17" |
| | By-pass | 90 x 148 mm | 305 x 600 mm |
| | Optional Tray | A5 (LEF)/<br>8.5" x 11" | A3/11" x 17" |
| | 2000-sheet LCT | A4/8.5" x 11" (LEF) | |
| | 1200-sheet LCT | B5 (LEF)/<br>257 x 182mm | A4 (LEF)/<br>297 x 210mm |
| Printing Paper Weight: | Standard tray: 60 to 256 g/m$^2$ (16 to 68 lb.)<br>Optional paper tray: 60 to 256 g/m$^2$ (16 to 68 lb.)<br>By-pass tray: 60 to 256 g/m$^2$ (16 to 68 lb.)<br>Duplex unit: 60 to 169 g/m$^2$ (16 to 45 lb.)<br>LCT 1200: 60 to 216 g/m$^2$ (10 to 571lb) | | |
| Output Paper Capacity: | Standard exit tray: 500 sheets or more (face down)*1<br>Shift Tray: 250 sheets (80 g/m$^2$)<br>1-bin Tray: 125 (80 g/m$^2$)<br>500-sheet finisher 500 (80 g/m$^2$)<br>1000-sheet finisher 250 + 1000 sheets (80 g/m$^2$)<br>1000-sheet booklet finisher: 100 + 1000 sheets (80 g/m$^2$)<br>*1: T6200, A4 LEF | | |
| Continuous copy: | Up to 999 sheets | | |

Main Frame

| | | |
|---|---|---|
| Zoom: | Arbitrary: From 25 to 400% (1% step) | |
| | Fixed: | |
| | North America | Europe |
| | 25% | 25% |
| | 50% | 50% |
| | 65% | 61% |
| | 73% | 71% |
| | 78% | 82% |
| | 85% | 87% |
| | 93% | 93% |
| | 100% | 100% |
| | 121% | 115% |
| | 129% | 122% |
| | 155% | 141% |
| | 200% | 200% |
| | 400% | 400% |
| Memory: | Standard: 1024 MB | |
| Power Source: | 120 V, 60 Hz: More than 12A (for North America)<br>220 V – 240 V, 50/60 Hz: More than 8A (for Europe/ASIA) | |

| | | | | |
|---|---|---|---|---|
| Power Consumption: | - | | 120V | 220 - 240V |
| | Maximum | | 1500 W or less | 1600 W or less |
| | Energy Saver | | 3.0 W or less | 6.0 W or less |
| Noise Emission:<br>(Sound Power Level) | Model | State | Mainframe | Complete system (*1) |
| | C2a | Standby | 40 dB(A) or Less | 44 dB(A) or Less |
| | | Operating | B/W: 65.8 dB(A) or Less | - |
| | | | Color: 66.4 dB(A) or Less | Color: 70.4 dB(A) or Less |
| | C2b | Standby | 40 dB(A) or Less | 46.9 dB(A) or Less |
| | | Operating | B/W: 67.6 dB(A) or Less | - |
| | | | Color: 67.9 dB(A) or Less | Color: 71.9 dB(A) or Less |
| (*1) The complete system consists of mainframe, ARDF, finisher, and LCT.<br>The above measurements were made in accordance with Ricoh standard methodology. | | | | |
| Dimensions (W x D x H):<br>Copier: 670 x 671 x 760 mm (26.4" x 26.4" x 29.9")<br>Copier + PFU or LCT: 670 x 671 x 1020 mm (26.4" x 26.4" x 40.2") | | | | |
| Weight: | Less than 120 kg (265 lb.) [with ARDF excluding toner] | | | |

## 1.2 PRINTER

| | |
|---|---|
| Printer Languages: | PCL 6/5c<br>RPCS (Refined Printing Command Stream)<br>Adobe PostScript 3 (optional)<br>PDF Direct (optional)<br>PictBridge (optional) |
| Resolution and Gradation: | PCL 5c:<br>300 x 300 dpi : Available only in B/W mode<br>600 x 600 dpi : Fast (1 bit), Standard (2 bits), Fine (4 bits)<br>PCL 6:<br>600 x 600 dpi : Fast (1 bit), Standard (2 bits), Fine (4 bits) / 1200 x 1200 dpi<br>RPCS:<br>600 x 600 dpi, 1,800 x 600 dpi*, 9600 dpi x 600 dpi*<br>*1,800 x 600 dpi = 600 x 600 dpi (2 bits)<br>*9600 dpi x 600 dpi* = 600 x 600 dpi (4 bits)<br>PS3:<br>600 x 600 dpi : Fast (1 bit), Standard (2 bits), Fine (4 bits) |
| Printing speed: | C2a:<br>28 ppm in Plain/Middle Thick mode<br>16 ppm in Thick/OHP mode (depending on paper type)<br>C2b:<br>33 ppm in Plain/Middle Thick mode<br>16 ppm in Thick/OHP mode (depending on paper type) |
| Resident Fonts: | PCL 6/5c (Standard):<br>45 Compatible fonts<br>13 International fonts<br>1 Bitmap font<br>Adobe PostScript 3 (Optional):<br>136 fonts (24 Type 2 fonts, 112 Type 14 fonts) |

Printer

| | |
|---|---|
| Host Interfaces: | USB2.0: Standard<br>USB Host (PictBridge): Optional<br>Ethernet (100 Base-TX/10 Base-T): Standard<br>Gigabit Ethernet (1000 Base-T): Optional<br>IEEE1284 parallel x 1: Optional<br>IEEE802.11a/g, g (Wireless LAN): Optional<br>Bluetooth (Wireless): Optional |
| Network Protocols: | TCP/IP (IPv4, IPv6), IPX/SPX, AppleTalk (Auto Switching) |

# 1.3 SCANNER

| | |
|---|---|
| Standard Scanner Resolution: | Main scan/Sub scan<br>600 dpi |
| Available scanning Resolution Range: | Twain Mode:<br>100 to1200 dpi<br>Delivery Mode:<br>100/200/300/400/600 dpi |
| Grayscales: | 1 bit or 8 bits/pixel each for RGB |
| Scanning Throughput (ARDF mode): | Scan to E-mail / Folder:<br>BW: 50 ppm (A4LEF / BW Text (Print) / 200dpi /Compression: On (MH))<br>FC: 50 ppm (A4LEF / FC Text / Photo / 200dpi / Compression: Standard) |
| Interface: | Ethernet (100 Base-TX/10 Base-T/1000 Base-T for TCP/IP), Wireless LAN, USB2.0/SD Slot |
| Compression Method: | B&W: TIFF (MH, MR, MMR)<br>Gray Scale, Full Color: JPEG |

# 1.4 SUPPORTED PAPER SIZES

## 1.4.1 PAPER FEED

### *North America*

BT: By-pass Tray, T1: Tray 1, T2/3/4: Tray 2/3/4, LCT 2000: Large Capacity Tray: 2000-sheet, LCT 1200: Large Capacity Tray: 1200-sheet, DU: Duplex Unit

| Paper | Size (W x L) | BT | T1 | T2/3/4 | LCT 2000 | LCT 1200 | DU |
|---|---|---|---|---|---|---|---|
| A3 W | 12" x 18" | M | - | - | - | - | - |
| A3 SEF | 297 x 420mm | M | - | M | - | - | M |
| A4 SEF | 210 x 297mm | M | - | A | - | - | M |
| A4 LEF | 297 x 210mm | M | S | M | S | S | M |
| A5 SEF | 148 x 210mm | M | - | - | - | - | - |
| A5 LEF | 210 x 148mm | M | S | A | - | - | M |
| A6 SEF | 105 x 148mm | M | - | - | - | - | - |
| B4 SEF | 257 x 364mm | M | - | M | - | - | M |
| B5 SEF | 182 x 257mm | M | - | A | - | - | M |
| B5 LEF | 257 x 182mm | M | S | M | - | S | M |
| B6 SEF | 128 x 182mm | M | - | - | - | - | - |
| Ledger | 11" x 17" | A | - | A | - | - | M |
| Letter SEF | 8.5" x 11" | A | - | A | - | - | M |
| Letter LEF | 11" x 8.5" | A | M | A | M | M | M |
| Legal SEF | 8.5" x 14" | M | - | A | - | - | M |

Supported Paper Sizes

| Paper | Size (W x L) | BT | T1 | T2/3/4 | LCT 2000 | LCT 1200 | DU |
|---|---|---|---|---|---|---|---|
| Government Legal SEF | 8.25" x 14" | M | - | M | - | - | M |
| Half Letter SEF | 5.5" x 8.5" | A | - | - | - | - | - |
| Executive SEF | 7.25" x 10.5" | M | - | M | - | - | M |
| Executive LEF | 10.5" x 7.25" | M | - | A | - | - | M |
| F SEF | 8" x 13" | M | - | M | - | - | M |
| Foolscap SEF | 8.5" x 13" | M | - | M | - | - | M |
| Folio SEF | 8.25" x 13" | M | - | M | - | - | M |
| | 11" x 15" | M | - | M | - | - | M |
| | 10" x 14" | M | - | M | - | - | M |
| | 8" x 10" | M | - | M | - | - | M |
| 8K | 267 x 390mm | M | - | M | - | - | M |
| 16K SEF | 195 x 267mm | M | - | M | - | - | M |
| 16K LEF | 267 x 195mm | M | - | M | - | - | M |
| Custom | | M | - | M | - | - | - |

| Paper | Size (W x L) | BT | T1 | T2/3/4 | LCT 2000 | LCT 1200 | DU |
|---|---|---|---|---|---|---|---|
| Com10 Env. | 4.125" x 9.5" | M | - | - | - | - | - |
| Monarch Env. | 3.875" x 7.5" | M | - | - | - | - | - |
| C6 Env. | 114 x 162mm | M | - | - | - | - | - |
| C5 Env. | 162 x 229mm | M | - | - | - | - | - |
| DL Env. | 110 x 220mm | M | - | - | - | - | - |

**Remarks:**

| | |
|---|---|
| A | Supported: the sensor detects the paper size. |
| M | Supported: the user specifies the paper size. |
| S | Supported: depends on a technician adjustment |
| - | Not supported |

Supported Paper Sizes

## *Europe/ Asia*

BT: By-pass Tray, T1: Tray 1, T2/3/4: Tray 2/3/4, LCT 2000: Large Capacity Tray: 2000-sheet, LCT 1200: Large Capacity Tray: 1200-sheet, DU: Duplex Unit

| Paper | Size (W x L) | BT | T1 | T2/3/4 | LCT 2000 | LCT 1200 | DU |
|---|---|---|---|---|---|---|---|
| A3 W | 12" x 18" | M | - | - | - | - | - |
| A3 SEF | 297 x 420mm | A | - | A | - | - | M |
| A4 SEF | 210 x 297mm | A | - | A | - | - | M |
| A4 LEF | 297 x 210mm | A | M | A | M | S | M |
| A5 SEF | 148 x 210mm | A | - | - | - | - | - |
| A5 LEF | 210 x 148mm | A | S | A | - | - | M |
| A6 SEF | 105 x 148mm | A | - | - | - | - | - |
| B4 SEF | 257 x 364mm | M | - | A | - | - | M |
| B5 SEF | 182 x 257mm | M | - | A | - | - | M |
| B5 LEF | 257 x 182mm | M | S | A | - | S | M |
| B6 SEF | 128 x 182mm | M | - | - | - | - | - |
| Ledger | 11" x 17" | M | - | M | - | - | M |
| Letter SEF | 8.5" x 11" | M | - | A | - | - | M |
| Letter LEF | 11" x 8.5" | M | S | M | S | S | M |
| Legal SEF | 8.5" x 14" | M | - | M | - | - | M |
| Government Legal SEF | 8.25" x 14" | M | - | M | - | - | M |

| Paper | Size (W x L) | BT | T1 | T2/3/4 | LCT 2000 | LCT 1200 | DU |
|---|---|---|---|---|---|---|---|
| Half Letter SEF | 5.5" x 8.5" | M | - | - | - | - | - |
| Executive SEF | 7.25" x 10.5" | M | - | M | - | - | M |
| Executive LEF | 10.5" x 7.25" | M | - | M | - | - | M |
| F SEF | 8" x 13" | M | - | M | - | - | M |
| Foolscap SEF | 8.5" x 13" | M | - | M | - | - | M |
| Folio SEF | 8.25" x 13" | M | - | M | - | - | M |
| | 11" x 15" | M | - | M | - | - | M |
| | 10" x 14" | M | - | M | - | - | M |
| | 8" x 10" | M | - | M | - | - | M |
| 8K | 267 x 390mm | M | - | M | - | - | M |
| 16K SEF | 195 x 267mm | M | - | M | - | - | M |
| 16K LEF | 267 x 195mm | M | - | M | - | - | M |
| Custom | | M | - | M | - | - | - |
| Com10 Env. | 4.125" x 9.5" | M | - | - | - | - | - |
| Monarch Env. | 3.875" x 7.5" | M | - | - | - | - | - |
| C6 Env. | 114 x 162mm | M | - | - | - | - | - |
| C5 Env. | 162 x 229mm | M | - | - | - | - | - |
| DL Env. | 110 x 220mm | M | - | - | - | - | - |

Supported Paper Sizes

**Remarks:**

| | |
|---|---|
| A | Supported: the sensor detects the paper size. |
| M | Supported: the user specifies the paper size. |
| S | Supported: depends on a technician adjustment |
| - | Not supported |

## 1.4.2 PAPER EXIT

### *1000-Sheet Booklet Finisher*

MF: Main Frame, Prf: Proof, Clr: Clear, Shf: Shift, Stp: Staple, SS: Saddle Stitch, 2/3 P: 2/3 Holes Punch, 4 P: 4 Holes Punch, N4P: North Europe 4 Holes Punch

| Paper | Size (W x L) | MF | 1000-sheet booklet finisher | | | | | | | |
|---|---|---|---|---|---|---|---|---|---|---|
| | | | Prf | Clr | Shf | Stp | SS | 2/3 P | 4 P | N4P |
| A3 W | 12" x 18" | Y | Y | Y | - | - | - | Y | Y | Y |
| A3 SEF | 297 x 420 mm | Y | Y | Y | Y | 30 | 30 | Y | Y | Y |
| A4 SEF | 210 x 297 mm | Y | Y | Y | Y | 50 | 50 | - | - | Y |
| A4 LEF | 297 x 210 mm | Y | Y | Y | Y | 50 | 50 | Y | Y | Y |
| A5 SEF | 148 x 210 mm | Y | Y | Y | Y | - | - | - | - | Y |
| A5 LEF | 210 x 148 mm | Y | Y | Y | Y | - | - | - | - | Y |
| A6 SEF | 105 x 148 mm | Y | Y | Y | - | - | - | - | - | - |
| B4 SEF | 257 x 364 mm | Y | Y | Y | Y | 30 | 30 | Y | Y | Y |
| B5 SEF | 182 x 257 mm | Y | Y | Y | Y | 50 | 50 | - | - | Y |
| B5 LEF | 257 x 182 mm | Y | Y | Y | Y | 50 | 50 | Y | Y | Y |
| B6 SEF | 128 x 182 mm | Y | Y | Y | - | - | - | - | - | Y |
| Ledger | 11" x 17" | Y | Y | Y | Y | 30 | 30 | Y | Y | Y |
| Letter SEF | 8.5" x 11" | Y | Y | Y | Y | 50 | 50 | - | - | Y |
| Letter LEF | 11" x 8.5" | Y | Y | Y | Y | 50 | - | Y | Y | Y |
| Legal SEF | 8.5" x 14" | Y | Y | Y | Y | 30 | 30 | - | - | Y |

Supported Paper Sizes

| Paper | Size (W x L) | MF | 1000-sheet booklet finisher | | | | | | | |
|---|---|---|---|---|---|---|---|---|---|---|
| | | | Prf | Clr | Shf | Stp | SS | 2/3 P | 4 P | N4P |
| Government Legal SEF | 8.25" x 14" | Y | Y | Y | Y | 30 | 30 | Y | Y | Y |
| Half Letter SEF | 5.5" x 8.5" | Y | Y | Y | Y | - | - | - | - | Y |
| Executive SEF | 7.25" x 10.5" | Y | Y | Y | Y | 50 | - | - | - | Y |
| Executive LEF | 10.5" x 7.25" | Y | Y | Y | Y | 50 | - | Y | Y | Y |
| F SEF | 8" x 13" | Y | Y | Y | Y | 30 | - | - | - | Y |
| Foolscap SEF | 8.5" x 13" | Y | Y | Y | Y | 30 | - | - | - | Y |
| Folio SEF | 8.25" x 13" | Y | Y | Y | Y | 30 | - | - | - | Y |
| | 11" x 15" | Y | Y | Y | Y | 30 | - | Y | Y | Y |
| | 10" x 14" | Y | Y | Y | Y | 30 | - | Y | - | Y |
| | 8" x 10" | Y | Y | Y | Y | 30 | - | - | - | Y |
| 8K | 267 x 390 mm | Y | Y | Y | Y | 30 | - | Y | Y | Y |
| 16K SEF | 195 x 267 mm | Y | Y | Y | Y | 50 | - | - | - | Y |
| 16K LEF | 267 x 195 mm | Y | Y | Y | Y | 50 | - | Y | Y | Y |
| Custom | | Y | Y | Y | - | - | - | - | - | - |
| Com10 Env. | 4.125" x 9.5" | Y | Y | - | - | - | - | - | - | - |
| Monarch Env. | 3.875" x 7.5" | Y | Y | - | - | - | - | - | - | - |
| C6 Env. | 114 x 162 mm | Y | Y | Y | - | - | - | - | - | - |
| C5 Env. | 162 x 229 mm | Y | Y | Y | - | - | - | - | - | - |
| DL Env. | 110 x 220 mm | Y | Y | Y | - | - | - | - | - | - |

**Remarks:**

| | |
|---|---|
| Y | Supported |
| 30 | Output up to 30 sheets |
| 50 | Output up to 50 sheets |
| - | Not supported |

Supported Paper Sizes

### *1000-Sheet Finisher and 500-Sheet Finisher*

MF: Main Frame, Prf: Proof, Clr: Clear, Shf: Shift, Stp: Staple

| Paper | Size (W x L) | MF | 1000-sheet finisher | | | | 500-sheet finisher | | | 1-Bin | Shift |
|---|---|---|---|---|---|---|---|---|---|---|---|
| | | | Prf | Clr | Shf | Stp | Clr | Shf | Stp | | |
| A3 W | 12" x 18" | Y | Y | Y | - | - | - | - | - | - | Y |
| A3 SEF | 297 x 420 mm | Y | Y | Y | Y | 30 | Y | Y | 30 | Y | Y |
| A4 SEF | 210 x 297 mm | Y | Y | Y | Y | 50 | Y | Y | 50 | Y | Y |
| A4 LEF | 297 x 210 mm | Y | Y | Y | Y | 50 | Y | Y | 50 | Y | Y |
| A5 SEF | 148 x 210 mm | Y | Y | Y | Y | - | Y | Y | - | Y | Y |
| A5 LEF | 210 x 148 mm | Y | Y | Y | Y | - | Y | Y | - | Y | Y |
| A6 SEF | 105 x 148 mm | Y | - | - | - | - | Y | - | - | - | Y |
| B4 SEF | 257 x 364 mm | Y | Y | Y | Y | 30 | Y | Y | 30 | Y | Y |
| B5 SEF | 182 x 257 mm | Y | Y | Y | Y | 50 | Y | Y | 50 | Y | Y |
| B5 LEF | 257 x 182 mm | Y | Y | Y | Y | 50 | Y | Y | 50 | Y | Y |
| B6 SEF | 128 x 182 mm | Y | Y | - | - | - | Y | - | - | Y | Y |

| Paper | Size (W x L) | MF | 1000-sheet finisher | | | | 500-sheet finisher | | | 1-Bin | Shift |
|---|---|---|---|---|---|---|---|---|---|---|---|
| | | | Prf | Clr | Shf | Stp | Clr | Shf | Stp | | |
| Ledger | 11" x 17" | Y | Y | Y | Y | 30 | Y | Y | 30 | Y | Y |
| Letter SEF | 8.5" x 11" | Y | Y | Y | Y | 50 | Y | Y | 50 | Y | Y |
| Letter LEF | 11" x 8.5" | Y | Y | Y | Y | 50 | Y | Y | 50 | Y | Y |
| Legal SEF | 8.5" x 14" | Y | Y | Y | Y | 30 | Y | Y | 30 | Y | Y |
| Government Legal SEF | 8.25" x 14" | Y | Y | Y | Y | - | Y | Y | 30 | Y | Y |
| Half Letter SEF | 5.5" x 8.5" | Y | Y | Y | Y | - | Y | Y | - | Y | Y |
| Executive SEF | 7.25" x 10.5" | Y | Y | Y | Y | 50 | Y | Y | 50 | Y | Y |
| Executive LEF | 10.5" x 7.25" | Y | Y | Y | Y | 50 | Y | Y | 50 | Y | Y |
| F SEF | 8" x 13" | Y | Y | Y | Y | 30 | Y | Y | 30 | Y | Y |
| Foolscap SEF | 8.5" x 13" | Y | Y | Y | Y | 30 | Y | Y | 30 | Y | Y |
| Folio SEF | 8.25" x 13" | Y | Y | Y | Y | 30 | Y | Y | 30 | Y | Y |
| | 11" x 15" | Y | Y | Y | Y | 30 | Y | Y | 30 | Y | Y |
| | 10" x 14" | Y | Y | Y | Y | 30 | Y | Y | 30 | Y | Y |
| | 8" x 10" | Y | Y | Y | Y | 30 | Y | Y | 30 | Y | Y |

Supported Paper Sizes

| Paper | Size (W x L) | MF | 1000-sheet finisher | | | | 500-sheet finisher | | | 1-Bin | Shift |
|---|---|---|---|---|---|---|---|---|---|---|---|
| | | | Prf | Clr | Shf | Stp | Clr | Shf | Stp | | |
| 8K | 267 x 390 mm | Y | Y | Y | Y | 30 | Y | Y | 30 | Y | Y |
| 16K SEF | 195 x 267 mm | Y | Y | Y | Y | 50 | Y | Y | 50 | Y | Y |
| 16K LEF | 267 x 195 mm | Y | Y | Y | Y | 50 | Y | Y | 50 | Y | Y |
| Custom | | Y | Y | - | - | - | - | - | - | - | Y |
| Com10 Env. | 4.125" x 9.5" | Y | - | - | - | - | Y | Y | - | Y | Y |
| Monarch Env. | 3.875" x 7.5" | Y | - | - | - | - | - | - | - | Y | Y |
| C6 Env. | 114 x 162 mm | Y | Y | - | - | - | - | - | - | Y | Y |
| C5 Env. | 162 x 229 mm | Y | Y | - | - | - | - | - | - | Y | Y |
| DL Env. | 110 x 220 mm | Y | Y | - | - | - | - | - | - | Y | Y |

**Remarks:**

| | |
|---|---|
| Y | Supported |
| 30 | Output up to 30 sheets |
| 50 | Output up to 50 sheets |
| - | Not supported |

## 1.4.3 PLATEN/ARDF ORIGINAL SIZE DETECTION

| Size (width x length) [mm] | Platen | ARDF | Platen | ARDF |
|---|---|---|---|---|
| | Inches | Inches | Metric | Metric |
| A3 (297 x 420) L | - | Y | Y*[3] | Y |
| B4 (257 x 364) L | - | - | Y*[3] | Y |
| A4 (210 x 297) L | Y*[1] | Y | Y*[3] | Y |
| A4 (297 x 210) S | Y*[3] | Y | Y*[3] | Y |
| B5 (182 x 257) L | - | - | Y*[3] | Y |
| B5 (257 x 182) S | - | - | Y*[3] | Y |
| A5 (148 x 210) L | - | - | -*[1] | Y |
| A5 (210 x 148) S | - | - | -*[1] | Y |
| B6 (128 x 182) L | - | - | - | - |
| B6 (182 x 128) S | - | - | - | - |
| 11" x 17" (DLT) | Y | Y*[2] | - | Y*[2] |
| 11" x 15" | - | Y*[2] | - | - |
| 10" x 14" | - | Y | - | - |
| 8.5" x 14" (LG) | Y | Y*[2] | - | - |
| 8.5" x 13" (F4) | - | Y*[2] | Y*[4] | Y*[4] |
| 8.25" x 13" | - | - | Y*[4] | Y*[4] |
| 8" x 13"(F) | - | - | Y*[4] | Y*[4] |
| 8.5" x 11" (LT) | Y*[3] | Y*[2] | Y*[3] | Y*[2] |

| Size (width x length) [mm] | Platen | ARDF | Platen | ARDF |
|---|---|---|---|---|
| | Inches | Inches | Metric | Metric |
| 11" x 8.5" (LT) | Y*3 | Y*2 | Y*3 | Y*2 |
| 8" x 10" | - | Y*2 | - | - |
| 5.5" x 8.5" (HLT) | -*1 | Y | - | - |
| 8.5" x 5.5" (HLT) | -*1 | Y | - | - |
| 8K (267 x 390) | - | - | Y*3 | Y*2 |
| 16K L (195 x 267) | - | - | Y*3 | Y*2 |
| 16K S (267 x 195) | - | - | Y*3 | Y*2 |
| 7.25" x 10.5" (Executive) | - | Y | - | - |
| 10.5" x 7.25" (Executive) | - | Y*2 | - | - |

*1: Use SP4-303 to detect original sizes as A5 lengthwise/HLT when the message “Can-t detect original size” shows.

*2: The machine can detect the paper size depending on the setting of SP6-016-1.

*3: The machine can detect the paper size depending on the setting of SP4-305-1.

*4: The machine can detect the paper size depending on the setting of SP5-126-1.

# 1.5 SOFTWARE ACCESSORIES

The printer drivers and utility software are provided as following two CD-ROMs

1: Printer Drivers and Utilities CD-ROM

2: Scanner/PostScript® Drivers and Utilities CD-ROM.

An auto-run installer lets you to select the components you want to install.

## 1.5.1 PRINTER DRIVERS

| Printer Language | Windows 95/98/ME | Windows NT4.0 | Windows 2000, XP, Server 2003/Vista | MacOS8.6 to 9.x, MacOSX10.1 or later |
|---|---|---|---|---|
| PCL5c / PCL6 | Yes | Yes | Yes | No |
| PS3 *2) | Yes | Yes | Yes | Yes |
| RPCS | Yes | Yes | Yes | No |

Note

- The PCL5c/6 and RPCS drivers are provided on the printer drivers CD-ROM
- The PS drivers are provided on the Scanner/PostScript® Drivers and Utilities CD-ROM.
- The printer drivers for Windows NT 4.0 are only for the Intel x86 platform. There is no Windows NT 4.0 printer driver for the PowerPC, Alpha, or MIPS platforms.
- The PS3 drivers are all genuine Adobe PS drivers, except for Windows 2000/XP/2003/Vista. Windows 2000 uses Microsoft PS. A PPD file for each operating system is provided with the driver.
- The PS3 driver for Macintosh supports Mac OS X 10.1 or later versions.

## 1.5.2 SCANNER AND LAN FAX DRIVERS

| Printer Language | Windows 95/98/ME | Windows NT4.0 | Windows 2000, XP, Server 2003/Vista | MacOS8.6 to 9.x, MacOSX10.1 or later |
|---|---|---|---|---|
| Network TWAIN | Yes | Yes | Yes | No |
| LAN-FAX | Yes | Yes | Yes | No |

Note

- The Network TWAIN and LAN Fax drivers are provided on the scanner drivers CD-ROM.
- This software lets you fax documents directly form your PC. Address Book Editor and Cover Sheet Editor are to be installed as well. (These require the optional fax unit.)

## 1.5.3 UTILITY SOFTWARE

| Software | Description |
|---|---|
| Font Manager 2000<br>(Win9x/ME, 2000/XP/2003, NT4) | A font management utility with screen fonts for the printer<br>This is provided on the printer drivers CD-ROM |
| Smart Device Monitor for Admin<br>(Win 95/98/Me, NT4,<br>2000/XP/Server 2003/Vista) | A printer management utility for network administrators. NIB setup utilities are also available.<br>This is provided on the printer drivers CD-ROM |
| DeskTopBinder –<br>SmartDeviceMonitor for Client<br>(Win 95/98/Me, NT4,<br>2000/XP/Server 2003/Vista) | A printer management utility for client users.<br>A utility for peer-to-peer printing over a NetBEUI or TCP/IP network.<br>A peer-to-peer print utility over a TCP/IP network.<br>This provides the parallel printing and recovery printing features.<br>This is provided on the printer drivers CD-ROM |
| Printer Utility for Mac<br>(Mac) | A utility for peer-to-peer printing over a NetBEUI or TCP This software provides several convenient functions for printing from Macintosh clients.<br>This is provided on the scanner drivers CD-ROM |
| DeskTopBinder Lite<br>(Win9x/ME, 2000/XP/2003, NT4) | DeskTopBinder Lite itself can be used as personal document management software and can manage both image data converted from paper documents and application files saved in each client's PC.<br>This is provided on the scanner drivers CD-ROM |

# 1.6 OPTIONAL EQUIPMENT

## 1.6.1 ARDF (D366)

| | | | |
|---|---|---|---|
| Paper Size/Weight: | Simplex | Size | A3 to A5, DLT to HLT |
| | | Weight | 40 to 128 g/m$^2$ (10 to 34 lb.) |
| | Duplex | Size | A3 to A5, DLT to HLT |
| | | Weight | 52 to 105 g/m$^2$ (14 to 28 lb.) |
| Table Capacity: | 50 sheets (80 g/m$^2$, 20 lb) | | |
| Original Standard Position: | Rear left corner | | |
| Separation: | Feed belt and separation roller | | |
| Original Transport: | Roller transport | | |
| Original Feed Order: | From the top original | | |
| Supported Magnification Ratios: | Copy | - | 32 to 200 % |
| | Fax | Color | 32.6 to 200 % |
| | | Black & white | 48.9 to 200 % |
| Power Source: | DC 24V, 5V from the scanner unit | | |
| Power Consumption: | 50 W or less | | |
| Dimensions (W × D × H) : | 550 mm x 491 mm x 120 mm (21.7" x 19.3" x 4.7") | | |
| Weight: | 10 kg (22 lb.) | | |

## 1.6.2 PAPER FEED UNIT (D387)

| | |
|---|---|
| Paper Feed System: | FRR |
| Paper Height Detection: | 5 steps (100%, 70%, 30%, 10% (Near end), and Empty) |
| Capacity: | 550 sheets |
| Paper Weight: | 80 g/m$^2$ (21 lb.) |
| Paper Size: | A3 SEF to A5, DLT SEF to HLT |
| Power Source: | DC 24V, 5V (from the main frame) |
| Power Consumption: | 55W |
| Dimensions (W x D x H): | 580 mm x 620 mm x 120 mm (22.8" x 24.4" x 4.7") |
| Weight: | Less than 15 kg |

## 1.6.3 PAPER FEED UNIT (D351)

| | |
|---|---|
| Paper Feed System: | FRR |
| Paper Height Detection: | 5 steps (100%, 70%, 30%, 10% (Near end), and Empty) |
| Capacity: | 500 sheets x 2 trays |
| Paper Weight: | 60 to 256 g/m$^2$ (16 to 68 lb.) |
| Paper Size: | A3 SEF to A5, DLT SEF to HLT |
| Power Source: | DC 24V, 5V (from the main frame) |
| Power Consumption: | Less than 60 W (Max.)/ Less than 35 W (Ave,) |
| Dimensions (W x D x H): | 580 mm x 620 mm x 260 mm (22.8" x 24.4" x 10.2") |
| Weight: | 26 kg (57.3 lb.) |

## 1.6.4 LCT 2000-SHEET (D352)

| | |
|---|---|
| Paper Size: | A4 LEF/LT LEF |
| Paper Weight: | 60 g/m$^2$ to 256 g/m$^2$ (16 lb. to 68 lb.) |
| Tray Capacity: | 2,000 sheets (80 g/m$^2$, 20lb.) |
| Remaining Paper Detection: | 5 steps (100%, 70%, 30%, 10%, Empty): Right Tray<br>4 steps (100%, 70%, 30%, Empty): Left Tray |
| Power Source: | DC 24 V, 5 V (from copier/printer) |
| Power Consumption: | 55 W (Max.)/30 W (Ave.) |
| Weight: | 26 kg (57.3 lb.) |
| Size (W x D x H): | 580 mm x 620 mm x 260 mm (22.8" x 24.4" x 10.2") |

## 1.6.5 LCT 1200-SHEET (D353)

| | |
|---|---|
| Paper Size: | A4 LEF/ LT LEF/ B5 LEF |
| Paper Weight: | 60 g/m$^2$ to 216 g/m$^2$ (16 lb to 57 lb.) |
| Tray Capacity: | 1,200 sheets (80 g/m$^2$, 20lb) |
| Remaining Paper Detection: | 5 steps (100%, 75%, 30%, 10%, End) |
| Power Source: | 24 Vdc, 5 Vdc (from copier/printer) |
| Power Consumption: | 55 W (Max)/ 25 W (Ave.) |
| Weight: | 14 kg (30.8 lb.) |
| Size (W x D x H): | 348 mm x 540 mm x 290 mm<br>(13.7" x 21.3" x 11.4") |

## 1.6.6 1000-SHEET BOOKLET FINISHER & PUNCH UNIT (B793)

| | |
|---|---|
| Print Paper Size: | **No punch mode**:<br>A3/11" x 17" to A5/8.5" x 5.5" (LEF)<br>**Punch mode**:<br>**2 holes**: A3/11" x 17" to B6/5.5" x 8.5" (SEF) or A4/8.5" x 11" to A5/8.5" x 5.5" (LEF)<br>**3 holes**:<br>A3, B4, 11" x 17" (SEF) or A4, B5, 8.5" x 11" (LEF)<br>**4 holes (Europe)**:<br>A3, B4, 11" x 17" (SEF) or A4, B5, 8.5" x 11" (LEF)<br>**4 holes (North Europe)**:<br>A3/11" x 17" to B6/5.5" x 8.5" (SEF)<br>**Staple mode**:<br>A3/11" x 17" to B5/8.5" x 11" |
| Paper Weight: | No punch mode:<br>52 to 256 g/m$^2$ (14 to 68 lb.) (Shift tray)<br>52 to 105 g/m$^2$ (14 to 28 lb.) (Proof tray)<br>Punch mode:<br>52 to 163 g/m$^2$ (14 to 43 lb.)<br>Staple mode:<br>64 to 90 g/m$^2$ (17 to 24 lb.)<br>Label/Thick paper/OHP cannot be stapled |
| Tray Capacity: | [Proof tray]<br>100 sheets: A4, 8.5" x 11" or less<br>50 sheets: B4, 8.5" x 14" or more<br>[Shift tray]<br>1000 sheets: A4, 8.5" x 11" (LEF) or smaller<br>500 sheets: B4, 8.5" x 14" or larger |
| Staple capacity: | Single size:<br>50 sheets: A4, 8.5" x 11" or smaller<br>30 sheets: B4, 8.5" x 14" or larger |
| ⇒ Saddle Stitch | 10 sheets (80 g/m$^2$ (20 lb) |

| | | |
|---|---|---|
| Staple position: | 3 positions<br>1-staple: 2 positions (Top Left, Top Right)<br>2-staples: 1 positions | |
| Staple replenishment: | Cartridge (5000 staples) | |
| Power consumption: | 60 W | |
| Dimensions (W x D x H): | 535 mm x 600 mm x 930 mm (21.1" x 23.6" x 36.6") | |
| Weight | Without punch unit: | 48 kg (105.8 lb.) |
| | With punch unit: | 50 Kg (110.3 lb.) |

## 1.6.7 1000-SHEET FINISHER (B408)

### *Upper Tray*

| | |
|---|---|
| Paper Size: | A3 to A6<br>11" x 17" to 5.5" x 8.5" |
| Paper Weight: | 60 to 157 g/m$^2$ (16 to 42 lb.) |
| Paper Capacity: | 250 sheets (A4 LEF/8.5" x 11" SEF or smaller)<br>50 sheets (A4, 8.5" x 11" or smaller)<br>30 sheets (B4, 8.5" x 14" or larger) |

### *Lower Tray*

| | | | | |
|---|---|---|---|---|
| Paper Size: | No staple mode:<br>A3 to B5, DLT to HLT<br>Staple mode:<br>A3, B4, A4, B5, DLT to LT | | | |
| Paper Weight: | No staple mode: 60 to 157 g/m$^2$ (16 to 42 lb)<br>Staple mode: 64 to 90 g/m$^2$ (17 to 24 lb) | | | |
| Stapler Capacity: | 30 sheets (A3, B4, DLT, LG)<br>50 sheets (A4, B5 LEF, LT) | | | |
| Paper Capacity: | No staple mode:<br>1,000 sheets (A4/LT or smaller: 80 g/m$^2$, 20 lb.)<br>500 sheets (A3, B4, DLT, LG: 80 g/m$^2$, 20 lb.)<br>Staple mode: (80 g/m$^2$, 20 lb., number of sets) | | | |
| | Set Size | 2 to 9 | 10 to 50 | - |
| | Size | | 10 to 30 | 31 to 50 |
| | A4/LT LEF<br>B5 LEF | 100 | 100 to 20 | 100 to 20 |
| | A4/LT SEF | 100 | 50 to 10 | 50 to 10 |
| | A3, B4, DLT, LG | 50 | 50 to 10 | - |
| Staple positions: | 1 Staple: 2 positions (Front, Rear)<br>2 Staples: 2 positions (Upper, Left) | | | |
| Staple Replenishment: | Cartridge (5,000 staples/cartridge) | | | |
| Power Source: | DC 24 V, 5 V (from the copier/printer) | | | |
| Power Consumption: | 50 W | | | |
| Weight: | 25 kg (55.2 lbs) | | | |
| Dimensions (W x D x H): | 527 x 520 x 790 mm (20.8" x 20.5" x 31.1") | | | |

## 1.6.8 500-SHEET FINISHER (D372)

| | |
|---|---|
| Paper Size: | A3 to B6 (SEF) |
| Paper Weight: | 52 to 128 g/m$^2$ (14 to 34 lb.) |
| Tray Capacity: | 500 sheets: A4, LT or smaller<br>250 sheets: B4, LG or larger |
| Staple capacity: | 30 sheets (A3, B4, DLT, LG)<br>50 sheets (A4, LT or smaller) |
| Staple position: | 3 positions<br>1-staple: 2 positions (Top right-oblique, Top left-oblique)<br>2-staples: 1 positions (Left) |
| Staple replenishment: | Cartridge (5000 staples) |

### *500-Sheet Finisher*

| | |
|---|---|
| Target Line Speed | 77 mm/sec. to 205 mm/sec |
| Target CPM | 35 cpm |
| Face-down Output Size | 12"x18", A3 SEF to A6 SEF, DLT to HLT SEF<br>Shift sizes: A3 SEF to B5 SEF<br>A5, B6, A6 SEF labels possible |
| Paper Thickness | 52 g/m$^2$ (45 K) to 157 g/m$^2$ (135 K)<br>Up to 253 g/m$^2$ (220K) without shift |

| ***Stapling*** | |
|---|---|
| Stack Height for Stapling | 50 sheets: A4, LT and smaller<br>30 sheets: B4, LG and larger |
| Size | A3 SEF to B5 SEF (can be mixed if same width) |
| Stack Thickness | 64g/m$^2$ (45 K) to 157 g/m (135 K) |
| Stapling Positions | Front/Oblique: 1, Front/Parallel: 1<br>Rear/Oblique: 1, Rear/Parallel: 1, 2 locations |

| ***Output Tray Capacity*** | | | |
|---|---|---|---|
| Non-staple Mode | 500 sheets: A4, LT and smaller | | |
| Staple Mode | 250 sheets: B4, LG and larger Stack Size (Stapling) | Stacks | Size |
| 2 to 9 Sheets | | 55 to 46 | A4, B5, LT LEF |
| 10 to 50 Sheets | | 45 to 10 | |
| 2 to 9 Sheets | | 55 to 27 | A4, B5, LT SEF |
| 10 to 50 Sheets | | 25 to 8 | |
| 2 to 9 Sheets | | 55 to 27 | A3, B4, DLT, LG |
| 10 to 30 Sheets | | 25 to 8 | |

| | | |
|---|---|---|
| ***Stacking*** | Non-Stapling Mode | Vertical: 15 mm or less |
| | | Horizontal: 15 mm or less |

| ***Jogging Precision*** | |
|---|---|
| 2 to 30 Sheets | 2 mm |
| 31 to 50 Sheets | 3 mm |
| Dimensions (W x D x H) | 396 x 551 x 276 mm (15.6 x 21.7 x 10.9 in.) |
| Weight | 12 kg (26.4 lb) |

## 1.6.9 BRIDGE UNIT (D386)

| | |
|---|---|
| Paper Size: | Standard sizes<br>A6 SEF to A3, HLT to DLT<br>Non-standard sizes<br>Width: 90 to 305 mm<br>Length: 148 to 600 mm |
| Paper Weight: | 52 g/m$^2$ to 256 g/m$^2$, 16 lb. to 68 lb. |
| Paper Capacity: | 125 sheets (80 g/m$^2$, 20 lb.): B4 or larger<br>250 sheets (80 g/m$^2$, 20 lb.): A4 or smaller |
| Power Source: | DC 24 V, 5 V (form the copier/printer) |
| Dimensions (W x D x H): | 415 mm x 412 mm x 111 mm (16.3" x 16.2" x 4.4") |
| Weight | 5 kg (11 lb.) |

## 1.6.10 SHIFT TRAY (D388)

| | |
|---|---|
| Paper Capacity: | 250 sheet (A4/ $8_{1/2}$" x $11_{1/2}$" or smaller: 80g/$m^2$/ 20 lbs)<br>125 sheet (B4 $8_{1/2}$" x $11_{1/2}$" or larger: 80g/$m^2$/ 20 lbs) |
| Paper Size: | Standard sizes<br>A6 SEF to A3, HLT to DLT<br>Non-standard sizes<br>Width: 90 to 305 mm<br>Length: 148 to 600 mm |
| Paper Weight: | 52-256 g/$m^2$/ 14 - 68 lbs |
| Power Consumption: | Max 10W (Power is supplied from the mainframe.) |
| Dimension (W x D x H): | 423 mm x 468 mm x 114 mm (16.7" x 18.4" x 4.5") |
| Weight: | Approx. 2kg (4.4lbs) |

## 1.6.11 1-BIN TRAY UNIT (D414)

| | |
|---|---|
| Paper Size: | Standard Size:<br>A3 /DLT to A5/ HLT SEF |
| Paper Weight: | 60 to 169 g/$m^2$, 16 to 45 lb. |
| Tray Capacity: | 125 sheets (80 g/$m^2$, 20 lb., A4) |
| Power Source: | DC 24 V, 5 V (from the copier) |
| Power Consumption: | Less than 1 W |
| Weight: | 1.7 kg |
| Size (W x D x H): | 565 mm x 410 mm x 115 mm (22.2" x 16.1" x 4.5") |

# Appendix:
# Maintenance Tables

| APPENDIX 2 MAINTENANCE TABLES REVISION HISTORY | | |
|---|---|---|
| **Page** | **Date** | **Added/Updated/New** |
| | | None |

# 2. APPENDIX: MAINTENANCE TABLES

## 2.1 MAINTENANCE TABLES

### 2.1.1 PREVENTIVE MAINTENANCE ITEMS

Chart: A4 (LT)/5%

Mode: 3 copies / original (prints/job)

Ratio 30%

Environment: Normal temperature and humidity

Yield may change depending on circumstances and print conditions.

Symbol keys: C: Clean, R: Replace, L: Lubricant, I: Inspect

***Mainframe***

| Item | 120K | 240K | 360K | 480K | 600K | EM | Remarks |
|---|---|---|---|---|---|---|---|
| **Scanner** | | | | | | | |
| Reflector | C | | | | | | Optics cloth |
| 1st/2nd/3rd mirrors | C | | | | | | Optics cloth |
| Front and Rear Rails | C | | | | | | Dry cloth |
| Exposure Glass | C | | | | | C | Dry cloth; alcohol |
| ADF Exposure Glass | C | | | | | C | Dry cloth; alcohol |
| APS Sensor | C | | | | | | Dry cloth |

Maintenance Tables

| Item | 120K | 240K | 360K | 480K | 600K | EM | Remarks |
|---|---|---|---|---|---|---|---|
| **PCU** | | | | | | | |
| Dev. Unit–K | | | | R | | | |
| Drum Unit-K, C, M, Y | R | | | | | | |
| Developer-K | | R | | | | | |
| **Transfer** | | | | | | | |
| Image transfer belt-cleaning unit | | R | | | | | |
| Paper Transfer Roller Unit | | | R | | | | |
| Toner Collection Bottle | R | | | | | | |
| **Fusing** | | | | | | | |
| Heating Roller | | R | | | | | |
| -Bearing | | R | | | | | |
| -Insulating Bushing | | R | | | | | |
| Fusing Belt | | R | | | | | |
| Fusing Roller | | R | | | | | |
| -Bearing | | R/L | | | | | S552R |
| Pressure Roller | | R | | | | | |
| -Bearing | | R/L | | | | | S552R |
| Idle Gear | | | | | | R/L | S552R |
| Heating Roller Thermistor | | C | | | | | |

| Item | 120K | 240K | 360K | 480K | 600K | EM | Remarks |
|---|---|---|---|---|---|---|---|
| Pressure Roller Thermistor | | C | | | | | |
| Lower Cover | | C | | | | | |
| Stripper Plate | | C | | | | | Alcohol |
| Entrance Guide Plate | | C | | | | | Alcohol |
| Exit Guide Plate | | C | | | | | Alcohol |
| Thermopile | | C | | | | | Cotton swab with alcohol |
| **Paper Path** | | | | | | | |
| Registration Roller | | | | | | C | Damp cloth |
| Registration Sensor | | | | | | C | Dry cloth |
| Vertical Transport Roller | | | | | | C | Damp cloth |
| Vertical Transport Sensor | | | | | | C | Dry cloth |
| Paper Feed Sensor | | | | | | C | Dry cloth |
| Pick-up Roller | | | | | | C | Dry cloth |
| Feed Roller | | | | | | C | Dry cloth |
| Separation Roller | | | | | | C | Dry cloth |
| Fusing Entrance Sensor | | | | | | C | Dry cloth |
| Fusing Exit Sensor | | | | | | C | Dry cloth |

Maintenance Tables

| Item | 120K | 240K | 360K | 480K | 600K | EM | Remarks |
|---|---|---|---|---|---|---|---|
| Paper Dust Container | C | | | | | C | |
| **Duplex Unit** | | | | | | | |
| Inverter Roller | | | | | | C | Damp cloth |
| Transport Roller | | | | | | C | Damp cloth |
| Duplex Entrance Sensor | | | | | | C | Dry cloth |
| Duplex Exit Sensor | | | | | | C | Dry cloth |
| **Miscellaneous** | | | | | | | |
| Dust Filter | R | | | | | | |
| Dust Glass | | | | | | C | |
| ID Sensor | | | | | | C | Blower Brush |

*1: Clean this thermistor only when it gets paper dust.

### *ARDF (D366)*

| Item | 120K | EM | Remarks |
|---|---|---|---|
| Sensors | | C | Blower brush |
| Platen Sheet Cover | | C | Damp cloth; alcohol (Replace if required.) |
| White Plate | | C | Dry or damp cloth |
| Drive Gear | | L | Grease G501 |
| Transport Roller | | C | Damp cloth; alcohol |
| Exit Roller | | C | Damp cloth; alcohol |
| Inverter Roller | | C | Damp cloth; alcohol |
| Idle Rollers | | C | Damp cloth; alcohol |

### *One-tray Paper Feed Unit (D387)*

| Item | EM | Remarks |
|---|---|---|
| Relay Roller | C | Damp cloth |
| Bottom Plate Pad | C | Damp cloth |

### *Two-tray Paper Feed Unit (D351)*

| Item | EM | Remarks |
|---|---|---|
| Feed Roller | C | Dry cloth |
| Separation Roller | C | Dry cloth |
| Pick-up Roller | C | Dry cloth |
| Paper Feed Sensor | C | Dry cloth |
| Relay Sensor | C | Dry cloth |
| Relay Roller | C | Damp cloth |
| Bottom Plate Pad | C | Damp cloth |

### *1200-sheet LCT (D353)*

| Item | EM | Remarks |
|---|---|---|
| Feed Roller | C | Dry cloth |
| Separation Roller | C | Dry cloth |
| Pick-up Roller | C | Dry cloth |
| Paper Feed Sensor | C | Dry cloth |
| Relay Sensor | C | Dry cloth |
| Relay Roller | C | Damp cloth |
| Bottom Plate Pad | C | Damp cloth |

### *2000-sheet LCT (D352)*

| Item | EM | Remarks |
|---|---|---|
| Feed Roller | C | Dry cloth |
| Separation Roller | C | Dry cloth |
| Pick-up Roller | C | Dry cloth |
| Paper Feed Sensor | C | Dry cloth |
| Relay Sensor | C | Dry cloth |
| Relay Roller | C | Damp cloth |
| Bottom Plate Pad | C | Damp cloth |

### *1000-Sheet Booklet Finisher (B793)*

| Items | EM | Remarks |
|---|---|---|
| Rollers | C | Damp cloth |
| Discharge Brush | C | Dry cloth |
| Sensors | C | Blower brush |

### *1000-Sheet Booklet Finisher Punch Kit (B807)*

| Items | EM | Remarks |
|---|---|---|
| Punch Chads | C | Discard chads. |

### *1000-Sheet Finisher (B408)*

| Items | EM | Remarks |
|---|---|---|
| Rollers | C | Damp cloth |
| Discharge Brush | C | Dry cloth |
| Sensors | C | Blower brush |

### *1 Bin Tray (D414)*

| Items | EM | Remarks |
|---|---|---|
| Rollers | C | Damp cloth |
| Tray | C | Damp cloth |
| Sensor | C | Blower brush |
| Bearing | C | S552R |

### *Bridge Unit (D386)*

| Items | EM | Remarks |
|---|---|---|
| Rollers | C | Damp cloth |

### *Shift Tray (D388)*

| Items | EM | Remarks |
|---|---|---|
| Tray | C | Damp cloth |

## 2.1.2 OTHERS YIELD PARTS

The parts mentioned in these tables have a target yield. However, the total copy/print volume made by the machine will not reach the target yield within the machine's targeted lifetime if the machine is used under the target usage conditions (ACV, color ratio, P/J, and C/O). So, these parts are categorized not as PM parts but as yield parts (EM parts).

### *Mainframe*

| Item | 120K | 240K | 480K | 600K | Remarks |
|---|---|---|---|---|---|
| Dev. Unit–C, M, Y | | | R | | |
| Developer- C, M, Y | | R | | | |
| ITB Unit | | | | R | |

### *ARDF*

| Item | 80K | 120K | 240K | Remarks |
|---|---|---|---|---|
| Pick-up Roller | R | | | Number of originals |
| Feed Belt | R | | | Number of originals |
| Separation Roller | R | | | Number of originals |

# Appendix:
# Service Call Conditions

| APPENDIX 3 SERVICE CALL CONDITIONS REVISION HISTORY | | |
|---|---|---|
| **Page** | **Date** | **Added/Updated/New** |
| 52 ~ 56 | 4/27/2011 | SC681 |
| 55 | 05/13/2009 | SC724 |
| 72 ~ 74 | 08/28/2009 | SC824 |
| 72 ~ 95 | 10/06/2010 | Added SC821, 822, 823, 826 thru 829. Req. new page nos. |

# 3. APPENDIX: SERVICE CALL CONDITIONS

## 3.1 SC TABLES

### 3.1.1 SERVICE CALL CONDITIONS

#### *Summary*

The ‘SC Table’ section shows the SC codes for controller errors and other errors. The latter (not controller errors) are put into four types. The type is determined by their reset procedures. The table shows the classification of the SC codes.



| | Key | Definition | Reset Procedure |
|---|---|---|---|
| Controller errors | CTL | The error has occurred in the controller. | See “Troubleshooting Procedure” in the table. |
| Other errors | A | The error involves the fusing unit. The machine operation is disabled. The user cannot reset the error. | Turn the main switch off and on. Reset the SC (set SP5-810-1). Turn the main switch off and on. |
| | B | The error involves one or some specific units. The machine operates as usual, excluding the related units. | Turn the operation switch off and on. |
| | C | The error is logged. The SC-code history is updated. The machine operates as usual. | The SC will not show. Only the SC history is updated. |

| | | | |
|---|---|---|---|
| | D | The machine operation is disabled. You can reset the machine by turning the operation switch or main switch off and on. If the error occurs again, the same SC code is displayed. | Turn the operation switch or main power switch off and on. |

After you turn the main power switch off, wait for one second or more before you turn the main power switch on (☛ SC 672). All SCs are logged. The print log data (SP5-990-004) in SP mode can check the latest 10 SC codes detected and total counters when the SC code is detected.

Note

- If the problem concerns electrical circuit boards, first disconnect then reconnect the connectors before you replace the PCBs.
- If the problem concerns a motor lock, first check the mechanical load before you replace motors or sensors.

## *SC Code Classification*

The table shows the classification of the SC codes:

| Class 1 | Section | SC Code | Detailed section |
|---|---|---|---|
| 1XX | Scanning | 100 - | Scanner |
| | | 190 - | Unique for a specific model |
| 2XX | Laser exposure | 200 - | Polygon motor |
| | | 220 - | Synchronization control |
| | | 230 - | FGATE signal related |
| | | 240 - | LD control |
| | | 280 - | Unique for a specific model |
| | | 290 - | Shutter |

| Class 1 | Section | SC Code | Detailed section |
|---|---|---|---|
| 3XX | Image development 1 | 300 - | Charge |
| | | 330 - | Drum potential |
| | | 350 - | Development |
| | | 380 - | Unique for a specific model |
| 4XX | Image development 2 | 400 - | Image transfer |
| | | 420 - | Paper separation |
| | | 430 - | Cleaning |
| | | 440 - | Around drum |
| | | 460 - | Unit |
| | | 480 - | Others |
| 5XX | Paper feed / Fusing | 500 - | Paper feed |
| | | 515 - | Duplex |
| | | 520 - | Paper transport |
| 5XX | Paper feed / Fusing | 530 - | Fan motor |
| | | 540 - | Fusing |
| | | 560 - | Others |
| | | 570 - | Unique for a specific model |

SC Tables

| Class 1 | Section | SC Code | Detailed section |
|---|---|---|---|
| 6XX | Communication | 600 - | Electrical counters |
| | | 620 - | Mechanical counters |
| | | 630 - | Account control |
| | | 640 - | CSS |
| | | 650 - | Network |
| | | 670 - | Internal data processing |
| | | 680 - | Unique for a specific model |
| 7XX | Peripherals | 700 - | Original handling |
| | | 720 - | Two-tray finisher |
| | | 740 - | Booklet finisher |
| 8XX | Controller | 800 - | Error after ready condition |
| | | 820 - | Diagnostics error |
| | | 860 - | Hard disk |
| | | 880 - | Unique for a specific model |
| 9XX | Others | 900 - | Counter |
| | | 920 - | Memory |
| | | 990 - | Others |

## 3.1.2 SC1XX: SCANNING

| No. | Type | Details (Symptom, Possible Cause, Troubleshooting Procedures) |
|---|---|---|
| 101 | D | Exposure lamp error |
| | | The peak white level is less than 64/255 digits (8 bits) when scanning the shading plate. |
| | | ▪ Exposure lamp defective<br>▪ Lamp stabilizer defective<br>▪ Exposure lamp connector defective<br>▪ Standard white plate dirty<br>▪ Scanner mirror or scanner lens out of position or dirty |
| | | 1. Check and clean the scanner mirror(s) and scanner lens.<br>2. Check and clean the shading plate.<br>3. Replace the exposure lamp.<br>4. Replace the lamp stabilizer.<br>5. Replace the scanner mirror(s) or scanner lens. |

| No. | Type | Details (Symptom, Possible Cause, Troubleshooting Procedures) |
|---|---|---|
| 120 | D | Scanner home position error 1 |
| | | The scanner home position sensor does not detect the “OFF” condition during operation. |
| | | ▪ Scanner motor driver defective<br>▪ Scanner motor defective<br>▪ Harness between SIO board and scanner motor disconnected<br>▪ Scanner HP sensor defective<br>▪ Harness between SIO and HP sensor disconnected |
| | | 1. Check the cable connection between the SIO board and scanner motor.<br>2. Check the cable connection between the SIO and HP sensor.<br>3. Replace the scanner motor.<br>4. Replace the HP sensor. |

| No. | Type | Details (Symptom, Possible Cause, Troubleshooting Procedures) |
|---|---|---|
| 121 | D | Scanner home position error 2 |
| | | The scanner home position sensor does not detect the “ON” condition during operation. |
| | | ▪ Scanner motor driver defective<br>▪ Scanner motor defective<br>▪ Harness between SIO board and scanner motor disconnected<br>▪ Scanner HP sensor defective<br>▪ Harness between SIO and HP sensor disconnected |
| | | 1. Check the cable connection between the SIO board and scanner motor.<br>2. Check the cable connection between the SIO and HP sensor.<br>3. Replace the scanner motor.<br>4. Replace the HP sensor. |

| No. | Type | Details (Symptom, Possible Cause, Troubleshooting Procedures) |
|---|---|---|
| 141 | D | Black level detection error |
| | | The black level cannot be adjusted within the target value during the zero clamp. |
| | | ▪ Harness disconnected<br>▪ Defective SBU |
| | | 1. Check the cable connection<br>2. Replace the SBU. |

| No. | Type | Details (Symptom, Possible Cause, Troubleshooting Procedures) |
|---|---|---|
| 142 | D | White level detection error |
| | | The white level cannot be adjusted within the target during auto gain control. |
| | | ▪ Dirty exposure glass or optics section<br>▪ SBU board defective<br>▪ Exposure lamp defective<br>▪ Lamp stabilizer defective<br>▪ Scanner motor defective |
| | | 1. Clean the exposure glass, white plate, mirrors, and lens.<br>2. Check if the exposure lamp is lit during initialization.<br>3. Check the harness connection between SBU and BICU.<br>4. Replace the exposure lamp.<br>5. Replace the scanner motor.<br>6. Replace the SBU board. |

| No. | Type | Details (Symptom, Possible Cause, Troubleshooting Procedures) |
|---|---|---|
| 144 | D | SBU communication error |
| | | The SBU connection cannot be detected at power on or recovery from the energy save mode. |
| | | ▪ Defective SBU<br>▪ Defective harness<br>▪ Defective detection port on the BICU |
| | | 1. Replace the harness.<br>2. Replace the SBU.<br>3. Replace the BICU. |

| No. | Type | Details (Symptom, Possible Cause, Troubleshooting Procedures) |
|---|---|---|
| 161 | D | IPU error |
| 001 | | The error result of self-diagnostic by the ASIC on the BICU is detected. |
| | | ▪ Defective BICU<br>Defective connection between BICU and SBU |
| | | 1. Check the connection between BICU and SBU.<br>Replace the BICU. |
| 002 | D | Detected an error during an access to the Ri. |
| | | ▪ Defective BICU board |
| | | 1. Replace the BICU board. |

| No. | Type | Details (Symptom, Possible Cause, Troubleshooting Procedures) |
|---|---|---|
| 165 | D | Copy Data Security Unit error |
| | | ▪ The copy data security board is not detected when the copy data security function is set "ON" with the initial setting.<br>▪ A device check error occurs when the copy data security function is set "ON" with the initial setting. |
| | | ▪ Incorrect installation of the copy data security board<br>▪ Defective copy data security board |
| | | 1. Reinstall the copy data security board.<br>2. Replace the copy data security board. |

| No. | Type | Details (Symptom, Possible Cause, Troubleshooting Procedures) |
|---|---|---|
| 195 | D | Serial Number Mismatch |
| | | ▪ Serial number stored in the memory does not have the correct code. |
| | | ▪ NVRAM defective<br>▪ BICU replaced without original NVRAM |
| | | 1. Check the serial number with SP5-811-002.<br>2. If the stored serial number is incorrect, contact your supervisor. |

## 3.1.3 SC 2XX: EXPOSURE

| No. | Type | Details (Symptom, Possible Cause, Troubleshooting Procedures) |
|---|---|---|
| 202 | D | Polygon motor error 1: ON timeout |
| | | The polygon mirror motor does not reach the targeted operating speed within the specified time after turning on or changing speed |
| | | ▪ Defective or disconnected harness to polygon motor driver board<br>▪ Defective polygon motor driver board<br>▪ Defective polygon motor. |
| | | 1. Replace the polygon motor.<br>2. Replace the laser optics housing unit.<br>3. Replace the harness.<br>4. Replace the BICU. |

| No. | Type | Details (Symptom, Possible Cause, Troubleshooting Procedures) |
|---|---|---|
| 203 | D | Polygon motor error 2: OFF timeout |
| | | The polygon mirror motor does leave the READY status within 3 seconds after the polygon motor switches off. |
| | | ▪ Disconnected or defective harness to polygon motor driver board<br>▪ Defective polygon motor driver board<br>▪ Defective polygon motor |
| | | 1. Check or replace the harness.<br>2. Replace the polygon motor. |

| No. | Type | Details (Symptom, Possible Cause, Troubleshooting Procedures) |
|---|---|---|
| 204 | D | Polygon motor error 3: XSCRDY signal error |
| | | The SCRDY_N signal goes HIGH (inactive) while the laser diode is firing. |
| | | ▪ Disconnected or defective harness to polygon motor driver board<br>▪ Defective polygon motor<br>▪ Defective polygon motor driver board |
| | | 1. Check or replace the harness.<br>2. Replace the polygon motor. |

| No. | Type | Details (Symptom, Possible Cause, Troubleshooting Procedures) |
|---|---|---|
| 210 | C | Laser synchronizing detection error: end position [K] |
| 211 | C | Laser synchronizing detection error: end position [Y] |
| 212 | C | Laser synchronizing detection error: end position [M] |
| 213 | C | Laser synchronizing detection error: end position [C] |
| - | - | The laser synchronizing detection signal for the end position of LDB [K], [Y], [M], [C] is not detected for one second after the LDB unit turned on when detecting the main scan magnification. |
| | | ▪ Disconnected or defective harness to synchronizing detector for end position<br>▪ Defective synchronizing detector board<br>▪ Defective LD board or driver<br>▪ Defective BICU |
| | | 1. Replace the harness of the LD board.<br>2. Replace the laser optics housing unit.<br>3. Replace the BICU. |

| No. | Type | Details (Symptom, Possible Cause, Troubleshooting Procedures) |
|---|---|---|
| 220 | D | Laser synchronizing detection error: start position [K]: LD0 |
| 222 | D | Laser synchronizing detection error: start position [Y]: LD0 |
| 226 | D | Laser synchronizing detection error: start position [C]: LD0 |
| - | - | The laser synchronizing detection signal for the start position of the LDB [K], [Y], [C] is not output for two seconds after LDB unit turns on while the polygon motor is rotating normally. |
| | | ▪ Disconnected cable from the laser synchronizing detection unit or defective connection<br>▪ Defective laser synchronizing detector<br>▪ Defective LDB<br>▪ Defective BICU |
| | | 1. Check the connectors.<br>2. Replace the laser-synchronizing detector.<br>3. Replace the LDB.<br>4. Replace the BICU. |

| No. | Type | Details (Symptom, Possible Cause, Troubleshooting Procedures) |
|---|---|---|
| 230 | D | FGATE ON error: K |
| | | The PFGATE ON signal does not assert within 5 seconds after processing the image in normal job or MUSIC for start position [K]. |
| | | ▪ Defective ASIC (Lupus)<br>▪ Poor connection between controller and BICU.<br>▪ Defective BICU |
| | | 1. Check the connection between the controller board and the BICU.<br>2. Replace the BICU.<br>3. Replace the controller board. |

| No. | Type | Details (Symptom, Possible Cause, Troubleshooting Procedures) |
|---|---|---|
| 231 | D | FGATE OFF error: K |
| | | ▪ The PFGATE ON signal still asserts within 5 seconds after processing the image in normal job or MUSIC for end position [K].<br>▪ The PFGATE ON signal still asserts when the next job starts. |
| | | See SC 230 for troubleshooting details. |

| No. | Type | Details (Symptom, Possible Cause, Troubleshooting Procedures) |
|---|---|---|
| 232 | D | FGATE ON error: Y |
| | | The PFGATE ON signal does not assert within 5 seconds after processing the image in normal job or MUSIC for start position [Y]. |
| | | See SC 230 for troubleshooting details. |

| No. | Type | Details (Symptom, Possible Cause, Troubleshooting Procedures) |
|---|---|---|
| 233 | D | FGATE OFF error: Y |
| | | ▪ The PFGATE ON signal still asserts within 5 seconds after processing the image in normal job or MUSIC for end position [Y].<br>▪ The PFGATE ON signal still asserts when the next job starts. |
| | | See SC 230 for troubleshooting details. |

| No. | Type | Details (Symptom, Possible Cause, Troubleshooting Procedures) |
|---|---|---|
| 234 | D | FGATE ON error: M |
| | | The PFGATE ON signal does not assert within 5 seconds after processing the image in normal job or MUSIC for start position [M]. |
| | | See SC 230 for troubleshooting details. |

| No. | Type | Details (Symptom, Possible Cause, Troubleshooting Procedures) |
|---|---|---|
| 235 | D | FGATE OFF error: M |
| | | ▪ The PFGATE ON signal still asserts within 5 seconds after processing the image in normal job or MUSIC for end position [M].<br>▪ The PFGATE ON signal still asserts when the next job starts. |
| | | See SC 230 for troubleshooting details. |

| No. | Type | Details (Symptom, Possible Cause, Troubleshooting Procedures) |
|---|---|---|
| 236 | D | FGATE ON error: C |
| | | The PFGATE ON signal does not assert within 5 seconds after processing the image in normal job or MUSIC for start position [C]. |
| | | See SC 230 for troubleshooting details. |

| No. | Type | Details (Symptom, Possible Cause, Troubleshooting Procedures) |
|---|---|---|
| 237 | D | FGATE OFF error: C |
| | | ▪ The PFGATE ON signal still asserts within 5 seconds after processing the image in normal job or MUSIC for end position [C].<br>▪ The PFGATE ON signal still asserts when the next job starts. |
| | | See SC 230 for troubleshooting details. |

| No. | Type | Details (Symptom, Possible Cause, Troubleshooting Procedures) |
|---|---|---|
| 240 | C | LD error: K |
| 241 | C | LD error: Y |
| 242 | C | LD error: M |
| 243 | C | LD error: C |
| - | - | The BICU detects LDB error a few times consecutively when LDB unit turns on after LDB initialization. |
| | | ▪ Worn-out LD<br>▪ Disconnected or broken harness of the LD |
| | | 1. Replace the harness of the LD.<br>2. Replace the laser optics housing unit.<br>3. Replace the BICU. |

| No. | Type | Details (Symptom, Possible Cause, Troubleshooting Procedures) |
|---|---|---|
| 285 | D | Line position adjustment (MUSIC) error |
| | | Line position adjustment fails four consecutive times. |
| | | ▪ Pattern sampling error ( insufficient image density )<br>▪ Defective ID sensors for the line position adjustment<br>▪ Defective image transfer belt unit<br>▪ Defective PCU(s)<br>▪ Defective laser optics housing unit |
| | | 1. Check and reinstall the image transfer belt unit and PCUs.<br>2. Check if each toner bottle has enough toner.<br>3. Replace the ID sensor.<br>4. Replace the image transfer belt unit.<br>5. Replace the PCU(s).<br>6. Replace the laser optics housing unit. |

## 3.1.4 SC3XX: IMAGE PROCESSING – 1

| No. | Type | Details (Symptom, Possible Cause, Troubleshooting Procedures) |
|---|---|---|
| 300 | D | AC charge output error [K] |
| 301 | D | AC charge output error [M] |
| 302 | D | AC charge output error [C] |
| 303 | D | AC charge output error [Y] |
| - | - | The measured voltage is not proper when IOB measures the charge output for each color. |
| | | ▪ Disconnected or broken high voltage cable<br>▪ Defective or not installed PCU<br>▪ Defective high voltage power supply |
| | | 1. Check or replace the connectors.<br>2. Replace the PCU for the affected color.<br>3. Replace the high voltage power supply. |

| No. | Type | Details (Symptom, Possible Cause, Troubleshooting Procedures) |
|---|---|---|
| 360 | D | TD sensor (Vt high) error 1: K |
| 361 | D | TD sensor (Vt high) error 1: M |
| 362 | D | TD sensor (Vt high) error 1: C |
| 363 | D | TD sensor (Vt high) error 1: Y |
| - | - | ▪ The Vt value of the black, magenta, cyan, or yellow TD sensor exceeds the specified value (default: 4.7V) with SP3020-002 for twenty counts.<br>▪ The [Vt - Vtref] value of the black, magenta, cyan, or yellow TD sensor exceeds the specified value (default: 5.0V) with SP3020-001. |
| | | ▪ Black, magenta, cyan, or yellow TD sensor disconnected<br>▪ Harness between TD sensor and PCU defective<br>▪ Defective TD sensor. |
| | | 1. Check the black, magenta, cyan, or yellow TD sensor connector and harness between the TD sensor and PCU for damage.<br>2. Check the drawer connector.<br>3. Replace the defective PCU. |

| No. | Type | Details (Symptom, Possible Cause, Troubleshooting Procedures) |
|---|---|---|
| 364 | D | TD sensor (Vt low) error 2: K |
| 365 | D | TD sensor (Vt low) error 2: M |
| 366 | D | TD sensor (Vt low) error 2: C |
| 367 | D | TD sensor (Vt low) error 2: Y |
| - | - | The Vt value of the black, magenta, cyan, or yellow TD sensor is below the specified value with SP3020-004 (default: 0.5V) for 10 counts. |
| | | ▪ TD sensor harness disconnected, loose, defective<br>▪ A drawer connector disconnected, loose, defective<br>▪ TD sensor defective |
| | | 1. Check the black, magenta, cyan, or yellow TD sensor connector and harness between the TD sensor and PCU for damage.<br>2. Check the drawer connector.<br>3. Replace the defective PCU. |

| No. | Type | Details (Symptom, Possible Cause, Troubleshooting Procedures) |
|---|---|---|
| 372 | D | TD sensor adjustment error: K |
| 373 | D | TD sensor adjustment error: M |
| 374 | D | TD sensor adjustment error: C |
| 375 | D | TD sensor adjustment error: Y |
| - | - | During TD sensor initialization, the output value of the black, magenta, cyan, or yellow TD sensor is not within the range of the specified value with SP3238-001 to -004 (default: 2.5V) ± 0.2V |
| | | ▪ Heat seal not removed from a new developer pack<br>▪ TD harness sensor disconnected, loose or defective<br>▪ TD sensor defective<br>▪ Harness between TD sensor and drawer disconnected, defective |
| | | 1. Remove the heat seal from each PCU.<br>2. Replace the defective PCU. |

| No. | Type | Details (Symptom, Possible Cause, Troubleshooting Procedures) |
|---|---|---|
| 380 | C | Drum gear position sensor error: K |
| 381 | C | Drum gear position sensor error: M |
| 382 | C | Drum gear position sensor error: C |
| 383 | C | Drum gear position sensor error: Y |
| | | The machine does not detect the drum position signal for 3 seconds at the drum phase adjustment. |
| | | ▪ Dirty or defective drum gear position sensor |
| | | 1. Replace the drum gear position sensor.<br>2. Replace the PCU. |

| No. | Type | Details (Symptom, Possible Cause, Troubleshooting Procedures) |
|---|---|---|
| 396 | D | Drum/Development motor error: K |
| 397 | D | Drum/Development motor error: M |
| 398 | D | Drum/Development motor error: C |
| 399 | D | Drum/Development motor error: Y |
| - | - | The machine detects a High signal from the drum/development motor for 2 seconds after the drum/development motor turned on. |
| | | ▪ Overload on the drum/development motor<br>▪ Defective drum/development motor<br>▪ Defective harness<br>▪ Shorted 24 V fuse on the PSU<br>▪ Defective interlock system |
| | | 1. Check or replace the harness.<br>2. Replace the drum/development motor.<br>3. Replace the 24V fuse on the PSU. |

## 3.1.5 SC4XX: IMAGE PROCESSING - 2

| No. | Type | Details (Symptom, Possible Cause, Troubleshooting Procedures) |
|---|---|---|
| 400 | D | ID sensor adjustment error |
| | | When the Vsg error counter reaches "3", the machine detects "SC400". The Vsg error counter counts "1" when the Vsg detected by ID sensor is more than the value (default: 4.5V) specified with SP3324-005 or less than the value (default: 3.5V) specified with SP3324-006. |
| | | ▪ Dirty or defective ID sensor<br>▪ Defective ID sensor shutter |
| | | 1. Check the harness of the ID sensor.<br>2. Clean or replace the ID sensor.<br>Note<br>▪ After replacing the ID sensor, input the ID sensor correction coefficient with SP3362-013 to -018. For details, refer to "ID sensor board" in the Replacement and Adjustment section.<br>1. Replace the IOB.<br>2. Replace the image transfer belt unit. |

| No. | Type | Details (Symptom, Possible Cause, Troubleshooting Procedures) |
|---|---|---|
| 441 | D | Image transfer unit motor error |
| | | The motor LOCK signal is not detected for more than two seconds while the motor START signal is on. |
| | | ▪ Motor overload<br>▪ Defective image transfer unit motor |
| | | 1. Replace the image transfer belt unit.<br>2. Replace the IOB. |

| No. | Type | Details (Symptom, Possible Cause, Troubleshooting Procedures) |
|---|---|---|
| 442 | D | Image transfer belt contact motor error |
| | | The image transfer belt contact sensor does not detect the movement of actuator at the sensor while the polygon motor rotates. |
| | | ▪ Dirty image transfer belt contact sensor<br>▪ Defective image transfer belt contact motor<br>▪ Disconnected connector of image transfer belt contact sensor or motor<br>▪ Disconnected cable |
| | | 1. Replace the image transfer belt contact sensor.<br>2. Replace the image transfer belt contact motor. |

| No. | Type | Details (Symptom, Possible Cause, Troubleshooting Procedures) |
|---|---|---|
| 443 | C | Image transfer unit error |
| | | The machine detects the encoder sensor error. |
| | | ▪ Defective encoder sensor<br>▪ Image transfer unit installation error<br>▪ Defective image transfer unit motor |
| | | 1. Check if the image transfer unit is correctly set.<br>2. Replace the image transfer unit motor.<br>3. Replace the image transfer unit. |

| No. | Type | Details (Symptom, Possible Cause, Troubleshooting Procedures) |
|---|---|---|
| 452 | D | Paper transfer unit contact error |
| | | The paper transfer unit contact sensor does not detect the movement of actuator at the sensor while the polygon motor rotates. |
| | | ▪ Defective paper transfer unit contact sensor<br>▪ Defective paper transfer unit contact motor<br>▪ Broken +24V fuse on PSU<br>▪ Defective IOB |
| | | 1. Check the connection between the paper transfer unit and PSU.<br>2. Replace the paper transfer unit contact sensor.<br>3. Replace the paper transfer unit contact motor.<br>4. Replace the +24V fuse on the PSU.<br>5. Replace the IOB. |

| No. | Type | Details (Symptom, Possible Cause, Troubleshooting Procedures) |
|---|---|---|
| 460 | D | Separation power pack output error |
| | | An interrupt checks the status of the power pack every 20 ms. This SC is issued if the BICU detects a short in the power pack 10 times at D(ac). |
| | | ▪ Damaged insulation on the high-voltage supply cable<br>▪ Damaged insulation around the high-voltage power supply. |
| | | 1. Replace the high-voltage supply cable.<br>2. Replace the high-voltage power supply unit.<br>3. Replace the IOB. |

| No. | Type | Details (Symptom, Possible Cause, Troubleshooting Procedures) |
|---|---|---|
| 490 | D | Toner transport motor error |
| | | The LOCK signal is not detected for 2 seconds when the transport motor turns on. |
| | | ▪ Toner transport motor overload<br>▪ Disconnected or broken harness<br>▪ Defective toner transport motor<br>▪ Opened +24V fuse on the PSU<br>▪ Defective interlock switch |
| | | 1. Check or replace the harness.<br>2. Replace the toner transport motor.<br>3. Replace the +24V fuse on the PSU.<br>4. Replace the interlock switch. |

| No. | Type | Details (Symptom, Possible Cause, Troubleshooting Procedures) |
|---|---|---|
| 491 | D | High voltage power: Drum/ development bias output error |
| | | An error signal is detected for 0.2 seconds when charging the drum or development. |
| | | ▪ High voltage leak<br>▪ Broken harness<br>▪ Defective drum unit or development unit<br>▪ Defective high voltage supply unit |
| | | 1. Check or replace the harness.<br>2. Replace the drum unit or paper transfer unit.<br>3. Replace the high voltage supply unit. |

| No. | Type | Details (Symptom, Possible Cause, Troubleshooting Procedures) |
|---|---|---|
| 492 | C | High voltage power: Image transfer/ paper transfer bias output error |
| | | An error signal is detected for 0.2 seconds when charging the separation, image transfer bet or paper transfer roller. |
| | | ▪ High voltage leak<br>▪ Broken harness<br>▪ Defective image transfer belt unit or paper transfer unit<br>▪ Defective high voltage supply unit |
| | | 1. Check or replace the harness.<br>2. Replace the image transfer belt unit or paper transfer unit.<br>3. Replace the high voltage supply unit. |

| No. | Type | Details (Symptom, Possible Cause, Troubleshooting Procedures) |
|---|---|---|
| 498 | C | Temperature and humidity sensor error 2 |
| | | ▪ The thermistor output of the temperature sensor was not within the prescribed range (0.5V to 4.2V).<br>▪ The thermistor output of the humidity sensor was not within the prescribed range (0.01V to 2.4V). |
| | | ▪ Temperature and humidity sensor harness disconnected, loose, defective<br>▪ Temperature and humidity sensor defective |
| | | 1. Check the connector and harness.<br>2. Replace the temperature/humidity sensor. |

## 3.1.6 SC5XX: PAPER FEED AND FUSING

| No. | Type | Details (Symptom, Possible Cause, Troubleshooting Procedures) |
|---|---|---|
| 501 | B | Paper Tray 1 error |
| 502 | B | Paper Tray 2 error |
| - | - | ▪ When the tray lift motor rotates counterclockwise, (if the upper limit is not detected within 10 seconds), the machine asks the user to reset the tray.<br>▪ When the tray lift motor rotates clockwise, (if the upper limit is not detected within 1.5 seconds), the machine asks the user to reset the tray.<br>If one of these conditions occurs three consecutive times, the SC is generated. |
| | | ▪ Disconnected or defective paper lift sensor<br>▪ Disconnected or defective tray lift motor<br>▪ Defective bottom plate lift mechanism<br>▪ Too much paper in the tray<br>▪ Defective IOB |
| | | 1. Check if the paper is not loaded too much.<br>2. Check if the bottom plate smoothly moves up and down manually.<br>3. Check and/or replace the tray lift motor/ paper lift sensor.<br>4. Replace the IOB. |

| No. | Type | Details (Symptom, Possible Cause, Troubleshooting Procedures) |
|---|---|---|
| 503-01 | B | Tray 3 error (Paper Feed Unit or LCT) |
| | | **For the paper feed unit:**<br>▪ When the tray lift motor is turned on, the upper limit is not detected within 10 seconds<br>**For the LCT:**<br>▪ SC 503-01 occurs if the upper or lower limit is not detected within 8 seconds when the tray lift motor is turned on to lift or lower the tray. |
| | | **For the paper feed unit:**<br>▪ Defective tray lift motor or connector disconnection<br>▪ Defective lift sensor or connector disconnection<br>**For the LCT:**<br>▪ Defective stack transport clutch or connector disconnection<br>▪ Defective tray motor or connector disconnection<br>▪ Defective end fence home position sensor or connector disconnection<br>▪ Defective upper limit sensor or connector disconnection<br>▪ Defective tray lift motor or connector disconnection |
| | | 1. Check the cable connections.<br>2. Check and/or replace the defective component. |

| No. | Type | Details (Symptom, Possible Cause, Troubleshooting Procedures) |
|---|---|---|
| 503-02 | B | Tray 3 error (Paper Feed Unit or LCT) |
| | | This SC is generated if the following condition occurs 3 consecutive times.<br>**For the paper feed unit:**<br>▪ When the tray lowers, the tray lift sensor does not go off within 1.5 sec.<br>**For the LCT:**<br>▪ When the main switch is turned on or when the LCT is set, if the end fence is not in the home position (home position sensor ON), the tray lift motor stops.<br>▪ If the upper limit does not go off for 1.5 seconds even the tray lift motor turns on to lower the tray after the upper limit has been detected at power on. |
| | | **For the paper feed unit:**<br>▪ Defective tray lift motor or connector disconnection<br>▪ Defective lift sensor or connector disconnection<br>**For the LCT:**<br>▪ Defective stack transport clutch or connector disconnection<br>▪ Defective tray motor or connector disconnection<br>▪ Defective end fence home position sensor or connector disconnection |
| | | 1. Check the cable connections.<br>2. Check and/or replace the defective component. |

| No. | Type | Details (Symptom, Possible Cause, Troubleshooting Procedures) |
|---|---|---|
| 504-01 | B | Tray 4 error (Paper Feed Unit or LCT) |
| | | **For the two-tray paper feed unit**<br>When the tray lift motor is turned on, the upper limit is not detected within 10 seconds. If this condition occurs three consecutive times, the SC is generated.<br>**For the LCT**<br>If the upper or lower limit is not detected within 8 seconds when the tray lift motor is turned on to lift up or lower the tray |
| | | ▪ Defective tray lift motor or connector disconnection<br>▪ Defective lift sensor or connector disconnection |
| | | 1. Check the cable connections.<br>2. Check and/or replace the defective component. |

| No. | Type | Details (Symptom, Possible Cause, Troubleshooting Procedures) |
|---|---|---|
| 504-02 | B | Tray 4 error (3 Tray Paper Feed Unit) |
| | | This SC is generated if the following condition occurs 3 consecutive times.<br>**For the two-tray paper feed unit**<br>▪ When the tray lowers, the tray lift sensor does not go off within 1.5 sec.<br>**For the LCT**<br>▪ If the upper limit does not go off for 1.5 seconds even the tray lift motor turns on to lower the tray after the upper limit has been detected at power on. |
| | | ▪ Defective tray lift motor or connector disconnection<br>▪ Defective lift sensor or connector disconnection |
| | | 1. Check the cable connections.<br>2. Check and/or replace the defective component. |

| No. | Type | Details (Symptom, Possible Cause, Troubleshooting Procedures) |
|---|---|---|
| 505 | B | 5th tray lift malfunction (optional LCT) |
| | -1 | This SC is generated if the following condition occurs:<br>▪ When the tray lift sensor of the LCT 1200-sheet does not go on after the tray lift motor has turned on to lift the paper tray.<br>▪ When the tray lift sensor of the LCT 1200-sheet does not go off after the tray lift motor has turned on to lower the paper tray.<br>▪ When the tray lift sensor of the LCT 1200-sheet does not go on after the pick-up roller solenoid has turned on at power on. |
| | | ▪ Tray lift motor defective or disconnected<br>Tray lift sensor defective or disconnected |
| | | 1. Check the harness connections.<br>2. Replace the tray lift motor.<br>Replace the tray lift sensor. |
| | | Both tray lift sensor and lower limit sensor are turned on at the same time when the main power is turned on or the right door is closed. |
| | | ▪ Tray lift motor defective or disconnected<br>▪ Tray lift sensor defective or disconnected<br>Lowe limit sensor defective or disconnected |
| | | 1. Check the harness connections.<br>2. Replace the tray lift motor.<br>3. Replace the tray lift sensor.<br>4. Replace the lower limit sensor. |

| No. | Type | Details (Symptom, Possible Cause, Troubleshooting Procedures) |
|---|---|---|
| 530 | D | Fusing fan error |
| | | The IOB does not receive the lock signal 10 seconds after turning on the fusing fan. |
| | | ▪ Defective fusing fan motor or connector disconnection<br>▪ Defective IOB |
| | | Check the connector and/or replace the fusing fan motor. |

| No. | Type | Details (Symptom, Possible Cause, Troubleshooting Procedures) |
|---|---|---|
| 531 | D | Ventilation fan (at the left side of the machine) motor-front/rear error |
| | | The IOB does not receive the lock signal for 2 seconds after turning on the ventilation fan motor-front/rear. |
| | | ▪ Defective ventilation fan motor-front or rear |
| | | Replace the ventilation fan (at the left side of the machine) motor-front or rear. |

| No. | Type | Details (Symptom, Possible Cause, Troubleshooting Procedures) |
|---|---|---|
| 532 | D | IH coil fan error |
| | | The machine does not detect the fan motor lock signal for 2 seconds while the IH coil fan turns on. |
| | | ▪ Disconnected harness<br>▪ Overload on the IH coil fan motor<br>▪ Defective IH coil fan motor<br>▪ Defective IOB |
| | | 1. Check or replace the harness.<br>2. Replace the IH coil fan.<br>3. Replace the IOB. |

| No. | Type | Details (Symptom, Possible Cause, Troubleshooting Procedures) |
|---|---|---|
| 533 | D | IH inverter fan error |
| | | The machine does not detect the fan motor lock signal for 2 seconds while the IH inverter fan turns on. |
| | | ▪ Disconnected harness<br>▪ Overload on the IH inverter fan motor<br>▪ Defective IH inverter fan motor<br>▪ Defective IOB |
| | | 1. Check or replace the harness.<br>2. Replace the IH inverter fan.<br>3. Replace the IOB. |

| No. | Type | Details (Symptom, Possible Cause, Troubleshooting Procedures) |
|---|---|---|
| 534 | D | Second duct fan error |
| | | The machine does not detect the fan motor lock signal for 2 seconds while the second duct fan turns on. |
| | | ▪ Disconnected harness<br>▪ Overload on the second duct fan motor<br>▪ Defective second duct motor<br>▪ Defective IOB |
| | | 1. Check or replace the harness.<br>2. Replace the second duct fan.<br>3. Replace the IOB. |

| No. | Type | Details (Symptom, Possible Cause, Troubleshooting Procedures) |
|---|---|---|
| 535 | D | Paper exit fan error |
| | | The machine does not detect the fan motor lock signal for 2 seconds while the paper exit fan turns on. |
| | | ▪ Disconnected harness<br>▪ Overload on the paper exit fan motor<br>▪ Defective paper exit motor<br>▪ Defective IOB |
| | | 1. Check or replace the harness.<br>2. Replace the paper exit fan.<br>3. Replace the IOB. |

| No. | Type | Details (Symptom, Possible Cause, Troubleshooting Procedures) |
|---|---|---|
| 536 | D | Controller fan error |
| | | The motor lock signal error is detected for 10 seconds after the motor lock signal was first detected. |
| | | ▪ Defective controller fan motor<br>▪ Disconnected or defective harness<br>▪ Defective IOB |
| | | 1. Replace the controller fan motor.<br>2. Check or replace the harness.<br>3. Replace the IOB. |

| No. | Type | Details (Symptom, Possible Cause, Troubleshooting Procedures) |
|---|---|---|
| 540 | D | Fusing/Paper exit motor error |
| | | The IOB does not receive the lock signal 10 seconds after turning on the fusing/paper exit motor. |
| | | ▪ Motor overload<br>▪ Defective fusing/paper exit motor |
| | | Replace the fusing/paper exit motor. |

| No. | Type | Details (Symptom, Possible Cause, Troubleshooting Procedures) |
|---|---|---|
| 541 | A | Heating roller thermopile error |
| | | The temperature measured by the heating roller thermopile does not reach 0°C for 6 seconds. |
| | | ▪ Loose connection of the heating roller thermopile<br>▪ Defective heating roller thermopile<br>▪ Defective thermopile |
| | | 1. Check if the heating roller thermopile is firmly connected.<br>2. Replace the heating roller thermopile. |

| No. | Type | Details (Symptom, Possible Cause, Troubleshooting Procedures) |
|---|---|---|
| 542 | A | Heating roller warm-up error 1 |
| | | ▪ After the main switch is turned on or the cover is closed, the increment of the heating roller temperature per 10 seconds is 30°C or less. If this condition is detected five times consecutively, SC 542 is defined.<br>▪ The heating roller temperature does not reach 100°C for 15 seconds after the heating lamp on.<br>▪ The heating roller temperature does not reach the ready temperature while 60 seconds after the heating lamp on.<br>▪ The center temperature of the heating roller does not reach the ready temperature for 30 seconds after the both edge temperature of the heating roller has reached the ready temperature. |
| | | ▪ Dirty or defective thermopile<br>▪ Defective thermistor<br>▪ Defective heating roller lamp |
| | | 1. Check if the heating roller thermistor is firmly connected.<br>2. Replace the thermistor.<br>3. Check or replace the thermopile.<br>4. Replace the heating roller lamp. |

| No. | Type | Details (Symptom, Possible Cause, Troubleshooting Procedures) |
|---|---|---|
| 543 | A | Heating roller fusing lamp overheat 1 (software error) |
| | | The detected fusing temperature stays at 230°C for 1 second. |
| | | ▪ Defective PSU<br>▪ Defective IOB<br>▪ Defective BICU |
| | | Related SC code: SC 553 |
| | | 1. Replace the PSU.<br>2. Replace the IOB.<br>3. Replace the BICU. |

| No. | Type | Details (Symptom, Possible Cause, Troubleshooting Procedures) |
|---|---|---|
| 544 | A | Heating roller fusing lamp overheat 1 (hardware error) |
| | | During stand-by mode or a print job, the detected heating roller temperature reaches 250 °C. |
| | | ▪ Defective PSU<br>▪ Defective IOB<br>▪ Defective BICU<br>▪ Defective fusing control system |
| | | Related SC code: SC 543 |
| | | 1. Replace the PSU.<br>2. Replace the IOB.<br>3. Replace the BICU. |

| No. | Type | Details (Symptom, Possible Cause, Troubleshooting Procedures) |
|---|---|---|
| 545 | A | Heating roller fusing lamp consecutive full power 1 |
| | | When the fusing unit is not running in the ready condition, the heating roller fusing lamp keeps on full power for 8 seconds. |
| | | ▪ Broken heating roller thermistor |
| | | Related SC code: SC 555 |
| | | Replace the heating roller thermistor. |

| No. | Type | Details (Symptom, Possible Cause, Troubleshooting Procedures) |
|---|---|---|
| 555 | A | Pressure roller lamp consecutive full power 2 |
| | | When the fusing unit is not running in the ready condition, the pressure roller-fusing lamp keeps ON full power for 8 seconds or more. |
| | | ▪ Broken pressure roller fusing lamp |
| | | Related SC code: SC 545 |
| | | 1. Replace the pressure roller fusing lamp.<br>2. Replace the PSU. |

| No. | Type | Details (Symptom, Possible Cause, Troubleshooting Procedures) |
|---|---|---|
| 547 | D | Zero cross error |
| | | ▪ The zero cross signal is detected three times even though the heater relay is off when turning on the main power.<br>▪ The zero cross signal is not detected for 2 seconds even though the heater relay is on after turning on the main power or closing the front door.<br>▪ The detection error occurs twice or more in the 11 zero cross signal detections. This error is defined when the detected zero cross signal is less than 45. |
| | | ▪ Defective fusing lamp relay<br>▪ Defective fusing lamp relay circuit<br>▪ Unstable power supply |
| | | 1. Check the power supply source.<br>2. Replace the PSU |

| No. | Type | Details (Symptom, Possible Cause, Troubleshooting Procedures) |
|---|---|---|
| 551 | A | Pressure roller thermistor error |
| | | The temperature measured by the pressure roller thermistor does not reach 0 °C for 6 seconds. |
| | | ▪ Loose connection of pressure roller thermistor<br>▪ Defective thermopile<br>▪ Defective pressure roller thermistor |
| | | Related SC code: SC 541 |
| | | 1. Check that the pressure roller thermistor is firmly connected.<br>2. Replace the thermopile.<br>3. Replace the pressure roller thermistor. |

| No. | Type | Details (Symptom, Possible Cause, Troubleshooting Procedures) |
|---|---|---|
| 552 | A | Pressure roller warm-up error |
| | | After the main switch is turned on or the door is closed, the pressure roller temperature does not reach the ready temperature within 70 seconds during fusing unit warm-up. |
| | | ▪ Pressure roller fusing lamp broken |
| | | Related SC code: SC 542 |
| | | 1. Check if the pressure roller thermistor is firmly connected.<br>2. Replace the pressure roller fusing lamp. |

| No. | Type | Details (Symptom, Possible Cause, Troubleshooting Procedures) |
|---|---|---|
| 553 | A | Pressure roller fusing lamp overheat (software error) |
| | | The detected pressure roller temperature stays at 230°C or more for 1 second. |
| | | ▪ Defective PSU<br>▪ Defective IOB<br>▪ Defective BICU |
| | | Related SC code: SC 543 |
| | | 1. Replace the pressure roller thermistor.<br>2. Replace the PSU.<br>3. Replace the IOB.<br>4. Replace the BICU. |

| No. | Type | Details (Symptom, Possible Cause, Troubleshooting Procedures) |
|---|---|---|
| 554 | A | Pressure roller fusing lamp overheat (hardware error) |
| | | The pressure roller thermistor detects 250°C or more. |
| | | ▪ Defective PSU<br>▪ Defective IOB<br>▪ Defective BICU<br>▪ Defective fusing control system |
| | | 1. Replace the pressure roller thermistor.<br>2. Replace the PSU.<br>3. Replace the IOB.<br>4. Replace the BICU. |

| No. | Type | Details (Symptom, Possible Cause, Troubleshooting Procedures) |
|---|---|---|
| 555 | A | Pressure roller lamp consecutive full power 2 |
| | | When the fusing unit is not running in the ready condition, the pressure roller-fusing lamp keeps ON full power for 8 seconds or more. |
| | | ▪ Broken pressure roller fusing lamp |
| | | Related SC code: SC 545 |
| | | 1. Replace the pressure roller fusing lamp.<br>2. Replace the PSU. |

| No. | Type | Details (Symptom, Possible Cause, Troubleshooting Procedures) |
|---|---|---|
| 557 | C | Zero cross frequency error |
| | | When the zero cross signal is 66 or more and it is detected 10 times or more in 11 detections, the machine determines that input 60 Hz and SC557 occurs. |
| | | ▪ Noise (High frequency) |
| | | Check the power supply source. |

| No. | Type | Details (Symptom, Possible Cause, Troubleshooting Procedures) |
|---|---|---|
| 559 | A | Consecutive fusing jam |
| | | The paper jam counter for the fusing unit reaches 3 times. The paper jam counter is cleared if the paper is fed correctly.<br>This SC is activated only when SP1159-001 is set to "1" (default "0"). |
| | | ▪ Paper jam in the fusing unit. |
| | | Remove the paper that is jammed in the fusing unit. Then make sure that the fusing unit is clean and has no obstacles in the paper feed path. |

| No. | Type | Details (Symptom, Possible Cause, Troubleshooting Procedures) |
|---|---|---|
| 561 | A | Heating roller thermopile error |
| | | The temperature measured by the thermopile does not reach 0 °C for 20 seconds. |
| | | ▪ Loose connection of the thermopile<br>▪ Defective thermopile |
| | | 1. Check if the thermopile is firmly connected.<br>2. Replace the thermopile. |

| No. | Type | Details (Symptom, Possible Cause, Troubleshooting Procedures) |
|---|---|---|
| 563 | A | Heating roller overheat 3 (software error) |
| | | The detected fusing roller temperature stays at 230°C or more for 1 second. |
| | | ▪ Defective PSU<br>▪ Defective IOB<br>▪ Defective BICU |
| | | 1. Replace the thermistor.<br>2. Replace the PSU.<br>3. Replace the IOB.<br>4. Replace the BICU. |

| No. | Type | Details (Symptom, Possible Cause, Troubleshooting Procedures) |
|---|---|---|
| 564 | A | Heating roller overheat 3 (hardware error) |
| | | The thermopile detects 250°C or more. |
| | | ▪ Defective PSU<br>▪ Defective IOB<br>▪ Defective BICU<br>▪ Defective fusing control system |
| | | 1. Replace the thermistor.<br>2. Replace the PSU.<br>3. Replace the IOB.<br>4. Replace the BICU. |

| No. | Type | Details (Symptom, Possible Cause, Troubleshooting Procedures) |
|---|---|---|
| 565 | A | Heating lamp consecutive full power 3 |
| | | When the fusing unit is not running in the ready condition, the pressure roller-fusing lamp keeps ON full power for 120 seconds or more. |
| | | ▪ Broken heating roller fusing lamp |
| | | 1. Replace the heating roller lamp.<br>2. Replace the PSU. |

## 3.1.7 SC6XX: DEVICE COMMUNICATION

| No. | Type | Details (Symptom, Possible Cause, Troubleshooting Procedures) |
|---|---|---|
| 610 | D | Mechanical counter error: K |
| 611 | D | Mechanical counter error: FC |
| - | - | This SC is only for NA models.<br>The machine detects the mechanical counter error when SP5987-001 is set to "1". |
| | | ▪ Disconnected mechanical counter<br>▪ Defective mechanical counter |
| | | Check or replace the mechanical counter. |

| No. | Type | Details (Symptom, Possible Cause, Troubleshooting Procedures) |
|---|---|---|
| 620 | D | ARDF communication error |
| | | After the ARDF is detected, the break signal occurs or communication timeout occurs. |
| | | ▪ Incorrect installation of ARDF<br>▪ ARDF defective<br>▪ BICU board defective<br>▪ External noise |
| | | 1. Check the cable connection of the ARDF.<br>2. Shut out the external noise.<br>3. Replace the ARDF.<br>4. Replace the BICU board. |

| No. | Type | Details (Symptom, Possible Cause, Troubleshooting Procedures) |
|---|---|---|
| 621 | D | Finisher communication error |
| 622 | D | Paper tray unit communication error |
| - | - | While the IOB communicates with an optional unit, an SC code is displayed if one of following conditions occurs.<br>▪ The IOB receives the break signal which is generated by the peripherals only just after the main switch is turned on.<br>▪ When the IOB does not receive an OK signal from a peripheral 100ms after sending a command to it. The IOB resends the command. The IOB does not receive an OK signal after sending the command 3 times. |
| | | ▪ Cable problems<br>▪ IOB problems<br>▪ BICU problems<br>▪ PSU problems in the machine<br>▪ Main board problems in the peripherals |
| | | 1. Check if the cables of peripherals are correctly connected.<br>2. Replace the PSU if no power is supplied to peripherals.<br>3. Replace the IOB or main board of peripherals.<br>4. Replace the BICU. |

| No. | Type | Details (Symptom, Possible Cause, Troubleshooting Procedures) |
|---|---|---|
| 623 | D | 2nd Paper Bank communication error |
| | | This SC is not issued for this machine.<br>When a communication error signal between the 1st paper bank and 2nd paper bank is received. |
| | | ▪ Loose connector |

| No. | Type | Details (Symptom, Possible Cause, Troubleshooting Procedures) |
|---|---|---|
| 632 | CTL B | Counter device error 1 |
| | | After 3 attempts to send a data frame to the optional counter device via the serial communication line, no ACK signal was received within 100 ms. |
| | | ▪ Serial line between the optional counter device, the relay board and copier control board is disconnected or damaged<br>▪ Make sure that SP5113 is set to enable the optional counter device. |

| No. | Type | Details (Symptom, Possible Cause, Troubleshooting Procedures) |
|---|---|---|
| 633 | CTL B | Counter device error 2 |
| | | After 3 attempts to send a data frame to the optional counter device via the serial communication line, no ACK signal was received within 100 ms. |
| | | ▪ Serial line between the optional counter device, the relay board and copier control board is disconnected or damaged<br>▪ Make sure that SP5113 is set to enable the optional counter device. |

| No. | Type | Details (Symptom, Possible Cause, Troubleshooting Procedures) |
|---|---|---|
| 634 | CTL B | Counter device error 3 |
| | | A backup RAM error was returned by the counter device. |
| | | ▪ Counter device control board defective<br>▪ Backup battery of counter device defective |

| No. | Type | Details (Symptom, Possible Cause, Troubleshooting Procedures) |
|---|---|---|
| 635 | CTL B | Counter device error 4 |
| | | A backup battery error was returned by the counter device. |
| | | ▪ Counter device control board defective<br>▪ Backup battery of counter device defective |

| No. | Type | Details (Symptom, Possible Cause, Troubleshooting Procedures) |
|---|---|---|
| 636 | CTL | SD Card Error |
| 01 | D | Expanded authentication module error |
| | | There is no expanded authentication module in the machine.<br>The SD card or the file of the expanded authentication module is broken.<br>There is no DESS module in the machine. |
| | | ▪ No expanded authentication module<br>▪ Defective SD card<br>▪ No DESS module |
| | | 1. Install the expanded authentication module.<br>2. Install the SD card.<br>3. Install the DESS module. |
| 02 | D | Version error |
| | | The version of the expanded authentication module is not correct. |
| | | ▪ Incorrect module version |
| | | Install the correct file of the expanded authentication module. |

| No. | Type | Details (Symptom, Possible Cause, Troubleshooting Procedures) |
|---|---|---|
| 641 | CTL D | BICU control data transfer abnormal |
| | | A sampling of the control data sent from the BICU reveals an abnormality. |
| | | ▪ Controller board defective<br>▪ External noise<br>▪ BICU board defective |
| | | 1. Check the connection between the controller board and BICU.<br>2. Replace the controller board.<br>3. Replace the BICU. |

| No. | Type | Details (Symptom, Possible Cause, Troubleshooting Procedures) |
|---|---|---|
| 650 | CTL B | Communication error of the remote service modem (Cumin-M) |
| -001 | - | Authentication error |
| | | The authentication for the Cumin-M fails at a dial up connection. |
| | | ▪ Incorrect SP settings<br>▪ Disconnected telephone line<br>▪ Disconnected modem board |
| | | Check and set the correct user name (SP5816-156) and password (SP5816-157). |
| -004 | - | Incorrect modem setting |
| | | Dial up fails due to the incorrect modem setting. |
| | | Same as -001 |
| | | Check and set the correct AT command (SP5819-160). |

SC Tables

| No. | Type | Details (Symptom, Possible Cause, Troubleshooting Procedures) |
|---|---|---|
| -005 | - | Communication line error |
| | | The supplied voltage is not sufficient due to the defective communication line or defective connection. |
| | | Same as -001 |
| | | Consult with the user's local telephone company. |

| No. | Type | Details (Symptom, Possible Cause, Troubleshooting Procedures) |
|---|---|---|
| 651 | CTL C | Incorrect dial up connection |
| | | -001: Program parameter error |
| | | -002: Program execution error |
| | | An unexpected error occurs when the modem (Cumin-M) tries to call the center with a dial up connection. |
| | | ▪ Caused by a software bug |
| | | No action required because this SC does not interfere with operation of the machine. |

| No. | Type | Details (Symptom, Possible Cause, Troubleshooting Procedures) |
|---|---|---|
| 669 | D | EEPROM error |
| | | Retry of EEPROM communication fails three times after the machine has detected the EEPROM error. |
| | | ▪ Caused by noise |
| | | Turn the main power switch off and on. |

| No. | Type | Details (Symptom, Possible Cause, Troubleshooting Procedures) |
|---|---|---|
| 670 | CTL D | Engine start up error |
| | | The ready signal from the engine board is not detected. |
| | | ▪ Defective engine board. |
| | | Replace the engine board. |

| | | |
|---|---|---|
| 671 | CTL D | Engine board mismatch error |
| | | Engine board and controller mismatch detected. |
| | | ▪ Wrong engine board installed.<br>▪ Wrong controller board installed.<br>▪ Check the type of engine board and controller board. |
| | | 1. Replace the BICU.<br>2. Replace the controller board. |

| No. | Type | Details (Symptom, Possible Cause, Troubleshooting Procedures) |
|---|---|---|
| 672 | CTL D | Controller-to-operation panel communication error at startup |
| | | After powering on the machine, the communication circuit between the controller and the operation panel is not opened, or communication with controller is interrupted after a normal startup. |
| | | ▪ Controller stall<br>▪ Controller board installed incorrectly<br>▪ Controller board defective<br>▪ Operation panel connector loose or defective |
| | | 1. Check the harness connection.<br>2. Replace the controller board. |

SC Tables

| No. | Sub code | Type | Details (Symptom, Possible Cause, Troubleshooting Procedures) |
|---|---|---|---|
| ⇒ 681 | 001 ~ 005 | D | RFID: Communication error due to the following: |
| | | | ▪ Poor connection with harness that connects RFID controller board and BCU board<br>▪ Defective RFID controller board.<br>▪ Defective BCU board<br>▪ Electrical noise |
| | | | ▪ Check the connection of the harness that runs between the RFID controller board and BCU board.<br>▪ Check the connection of the GND line for the ITB unit.<br>▪ Check the physical condition of this harness and replace it if it is damaged.<br>▪ Replace the RFID controller board.<br>▪ Replace the BCU board |
| | 061 ~ 064 | D | RFID: Communication error due to the following: |
| | | | ▪ Defective RFID reader and writer<br>▪ Defective RFID controller board<br>▪ Electrical noise |
| | | | ▪ Replace the toner cartridge for the affected color (See table below).<br>▪ Replace the BCU board<br>▪ Replace the RFID controller board. |
| | 071 ~ 074 | D | RFID: Communication error due to the following: |
| | | | ▪ Defective RFID reader and writer<br>▪ Defective RFID controller board<br>▪ Electrical noise |
| | | | ▪ Replace the toner cartridge for the affected color (See table below).<br>▪ Replace the RFID controller board. |
| | 081 ~ 164 | D | RFID: Communication error due to the following: |
| | | | ▪ Defective RFID reader and writer<br>▪ Electrical noise |

| No. | Sub code | Type | Details (Symptom, Possible Cause, Troubleshooting Procedures) |
|---|---|---|---|
| ⇒ | | | ▪ Replace the toner cartridge for the affected color (See table below).<br>▪ If the SC still occurs, see note below. |

⇒ ● For sub codes 061–164:

Use the following table to determine the affected toner cartridge.

| Sub code (last digit) | Affected toner cartridge |
|---|---|
| **1 | BK |
| **2 | M |
| **3 | C |
| **4 | Y |

⇒ ● For sub codes 081–164:

In some cases, replacing the toner cartridge may not clear the SC. If this happens, the cause is probably a board or harness defect, which affects all four colors.

In such cases:

- Check the physical condition of the harness that connects RFID controller board and BCU board. If it is damaged, replace it.
- Check the physical condition of the RFID controller board and BCU board. If they are damaged, replace them.

| No. | Type | Details (Symptom, Possible Cause, Troubleshooting Procedures) |
|---|---|---|
| 682 | D | Memory chip at TD sensor: Communication error |
| | | Retry of memory chip communication fails three times after the machine has detected the memory chip communication error. |
| | | ▪ Damaged memory chip data<br>▪ Disconnected inter face<br>▪ No memory chip on the development unit |

| No. | Type | Details (Symptom, Possible Cause, Troubleshooting Procedures) |
|---|---|---|
| | | ▪ Noise |
| | | Replace the PCU. |

| No. | Type | Details (Symptom, Possible Cause, Troubleshooting Procedures) |
|---|---|---|
| 683 | B | RFID: Unit check error |
| | | The machine gets RFID communication error even the toner cartridges have not been installed in the machine. |
| | | Caused by noise |
| | | Turn the main power switch off and on. |

| No. | Type | Details (Symptom, Possible Cause, Troubleshooting Procedures) |
|---|---|---|
| 687 | D | Memory address command error |
| | | The BICU does not receive a memory address command from the controller 120 seconds after paper is in the position for registration. |
| | | ▪ Loose connection<br>▪ Defective controller<br>▪ Defective BICU |
| | | 1. Check if the controller is firmly connected to the BICU.<br>2. Replace the controller.<br>3. Replace the BICU. |

| No. | Type | Details (Symptom, Possible Cause, Troubleshooting Procedures) |
|---|---|---|
| 690 | D | GAVD communication error |
| | | ▪ The I2C bus device ID is not identified during initialization.<br>▪ A device-status error occurs during I2C bus communication.<br>▪ The I2C bus communication is not established due to an error other than a buffer shortage. |
| | | ▪ Loose connection<br>▪ Defective BICU<br>▪ Defective LD controller board |
| | | 1. Turn the main switch off and on.<br>2. Check the cable connection.<br>3. Replace the laser optics-housing unit.<br>4. Replace the BICU board. |



## 3.1.8 SC7XX: PERIPHERALS

| No. | Type | Details (Symptom, Possible Cause, Troubleshooting Procedures) |
|---|---|---|
| 724 | D | Finisher stapler hammer motor error. |
| | | Stapling does not finish within the prescribed time after the staple hammer motor turns on. The 1st detection failure causes a jam error, and the 2nd failure causes this SC code. |
| | | ▪ Stapler hammer motor overloaded due to obstruction, jammed staple, number of sheets exceeds limit for stapling<br>▪ Stapler hammer motor disconnected, defective<br>▪ Staple hammer motor HP sensor disconnected, defective |

| No. | Type | Details (Symptom, Possible Cause, Troubleshooting Procedures) |
|---|---|---|
| 725 | B | Finisher exit guide plate motor error |
| | | After moving away from the guide plate position sensor, the exit guide is not detected at the home position within the prescribed time. The 1st detection failure issues a jam error, and the 2nd failure issues this SC code. |
| | | ▪ Guide plate motor disconnected, defective<br>▪ Guide plate motor overloaded due to obstruction<br>▪ Guide plate position sensor disconnected, defective |
| | | 1. Check the connections and cables for the components mentioned above.<br>2. Check for blockages in the guide plate motor mechanism.<br>3. Replace the guide plate position sensor and/or guide plate motor<br>4. Replace the finisher main board. |

| No. | Type | Details (Symptom, Possible Cause, Troubleshooting Procedures) |
|---|---|---|
| 730 | B | Finisher Tray 1 shift motor error |
| | | The shift roller HP sensor of the upper tray does not activate within the prescribed time after the shift tray starts to move toward or away from the home position. The 1st detection failure issues a jam error, and the 2nd failure issues this SC code. |
| | | ▪ Shift tray HP sensor of the upper tray disconnected, defective<br>▪ Shift tray motor of the upper tray is disconnected, defective<br>▪ Shift tray motor of the upper tray overloaded due to obstruction |
| | | 1. Check the connections and cables for the components mentioned above.<br>2. Check for blockages in shift motor mechanism.<br>3. Replace the shift tray HP sensor and/or shift motor<br>4. Replace the finisher main board. |

| No. | Type | Details (Symptom, Possible Cause, Troubleshooting Procedures) |
|---|---|---|
| 740 | B | Finisher corner stapler motor error |
| | | The 1st detection failure issues a jam error, and the 2nd failure issues this SC code.<br>**For 1000-sheet (booklet) finisher**<br>▪ The stapler motor does not switch off within the prescribed time after operating.<br>▪ The HP sensor of the staple unit does not detect the home position after the staple unit moves to its home position.<br>▪ The HP sensor of the staple unit detects the home position after the staple unit moves from its home position. |
| | | ▪ Staple jam<br>▪ Motor overload<br>▪ Defective stapler motor |
| | | 1. Check the connections and cables for the components mentioned above.<br>2. Replace the HP sensor and/or stapler motor<br>3. Replace the finisher main board. |

| No. | Type | Details (Symptom, Possible Cause, Troubleshooting Procedures) |
|---|---|---|
| 742 | B | Finisher stapler movement motor error |
| | | **For 1000-sheet (booklet) finisher**<br>▪ The stapler HP sensor is not activated within the specified time after the stapler motor turned on. (first detection: jam error, consecutive twice detection SC code). |
| | | ▪ Motor overload<br>▪ Loose connection of the stapler home position sensor<br>▪ Loose connection of the stapler movement motor<br>▪ Defective stapler home position sensor<br>▪ Defective stapler movement motor |
| | | 1. Check the connection of the stapler movement motor.<br>2. Check the connection of the stapler home position sensor.<br>3. Replace the stapler home position sensor.<br>4. Replace the stapler movement motor. |

| No. | Type | Details (Symptom, Possible Cause, Troubleshooting Procedures) |
|---|---|---|
| 746 | B | 1000-sheet booklet finisher: Stack feed motor error<br>▪ The stack feed HP sensor does not detect "ON" twice (once: jam error) for specified time after the stack feed motor has turned on.<br>▪ The stack feed HP sensor does not detect "OFF" twice (once: jam error) for specified time after the stack feed motor has turned on. |
| | | ▪ Motor overload<br>▪ Loose connection of the stack feed motor<br>▪ Defective stack feed motor |
| | | 1. Check the connections and cables for the stack feed motor and HP sensor.<br>2. Check for blockages in the stack feed motor mechanism.<br>3. Replace the stack feed HP sensor and/or stack feed motor<br>4. Replace the finisher main board. |

| No. | Type | Details (Symptom, Possible Cause, Troubleshooting Procedures) |
|---|---|---|
| 750 | B | 1000-sheet (booklet) finisher: Tray lift motor error |
| | | ▪ Motor overload<br>▪ Loose connection of the shift tray motor<br>▪ Defective shift tray motor |
| | | 1. Check the connections to the shift tray motor.<br>2. Replace the shift tray motor. |

| No. | Type | Details (Symptom, Possible Cause, Troubleshooting Procedures) |
|---|---|---|
| 760 | B | Finisher punch motor error |
| | | The punch HP sensor is not activated within the specified time after the punch motor turned on. The 1st detection failure issues a jam error, and the 2nd failure issues this SC code. |
| | | ▪ Punch HP sensor disconnected, defective<br>▪ Punch motor disconnected or defective<br>▪ Punch motor overload due to obstruction |
| | | 1. Check the connections and cables for the punch motor and HP sensor.<br>2. Check for blockages in the punch motor mechanism.<br>3. Replace the punch HP sensor and/or punch motor<br>4. Replace the finisher main board. |

| No. | Type | Details (Symptom, Possible Cause, Troubleshooting Procedures) |
|---|---|---|
| 761 | B | Finisher folder plate motor error |
| | | The folder plate moves but is not detected at the home position within the specified time. The 1st detection failure issues a jam error, and the 2nd failure issues this SC code. |
| | | ▪ Folder plate HP sensor disconnected, defective<br>▪ Folder plate motor disconnected, defective<br>▪ Folder plate motor overloaded due to obstruction. |
| | | 1. Check the connections and cables for the folder plate motor and HP sensor.<br>2. Check for blockages in the folder plate motor mechanism.<br>3. Replace the folder plate HP sensor and/or folder plate motor<br>4. Replace the finisher main board. |

| No. | Type | Details (Symptom, Possible Cause, Troubleshooting Procedures) |
|---|---|---|
| 763 | B | Punch movement motor error |
| | | The punch unit moves but is not detected at the home position within the specified time. The 1st detection failure issues a jam error, and the 2nd failure issues this SC code. |
| | | ▪ Motor harness disconnected, loose, defective<br>▪ Defective motor |
| | | 1. Check the connections to the punch movement motor.<br>2. Defective punch movement motor |

| No. | Type | Details (Symptom, Possible Cause, Troubleshooting Procedures) |
|---|---|---|
| 764 | B | Paper position sensor slide motor error |
| | | The paper position sensor moves but is not detected at the home position within the specified time. The 1st detection failure issues a jam error, and the 2nd failure issues this SC code. |
| | | ▪ Motor harness disconnected, loose, defective<br>▪ Defective motor |
| | | 1. Check the connections to the paper position sensor slide motor.<br>2. Defective paper position sensor slide motor. |

| No. | Type | Details (Symptom, Possible Cause, Troubleshooting Procedures) |
|---|---|---|
| 765 | B | Paper position sensor slide motor error |
| | | The paper position sensor moves but is not detected at the home position within the specified time. The 1st detection failure issues a jam error, and the 2nd failure issues this SC code. |
| | | ▪ Motor harness disconnected, loose, defective<br>▪ Defective motor |
| | | 1. Check the connections to the paper position sensor slide motor.<br>2. Defective paper position sensor slide motor. |

| No. | Type | Details (Symptom, Possible Cause, Troubleshooting Procedures) |
|---|---|---|
| 766 | B | Paper position sensor slide motor error |
| | | The paper position sensor moves but is not detected at the home position within the specified time. The 1st detection failure issues a jam error, and the 2nd failure issues this SC code. |
| | | ▪ Motor harness disconnected, loose, defective<br>▪ Defective motor |
| | | 1. Check the connections to the paper position sensor slide motor.<br>2. Defective paper position sensor slide motor. |

| No. | Type | Details (Symptom, Possible Cause, Troubleshooting Procedures) |
|---|---|---|
| 770 | B | Shift motor error |
| | | The shift motor HP sensor does not detect any change for 1.86 seconds after the shift motor has turned on at power on or during its operation. |
| | | ▪ Defective shift motor<br>▪ Defective shift motor HP sensor |
| | | 1. Check the connections to the shift motor and the shift motor HP sensor.<br>2. Defective shift motor or the shift motor HP sensor. |

| No. | Type | Details (Symptom, Possible Cause, Troubleshooting Procedures) |
|---|---|---|
| 791 | D | Bridge unit error |
| | | The machine recognizes the finisher, but does not recognize the bridge unit. |
| | | ▪ Defective connector<br>▪ Broken harness |
| | | 1. Check the connections between the bridge unit and the machine.<br>2. Install a new bridge unit. |

| No. | Type | Details (Symptom, Possible Cause, Troubleshooting Procedures) |
|---|---|---|
| 792 | B | Finisher error |
| | | The machine does not recognize the finisher, but recognizes the bridge unit. |
| | | ▪ Defective connector<br>▪ Defective harness<br>▪ Incorrect installation |
| | | 1. Check the connections between the finisher and the machine.<br>2. Install a new finisher. |

| No. | Type | Details (Symptom, Possible Cause, Troubleshooting Procedures) |
|---|---|---|
| 798<br>-1 | B | Upper limit switch error |
| | | The upper limit switch is pushed due to tray lift error or some problems. |
| | | ▪ Upper limit switch pulled up<br>▪ Defective upper limit swtich |
| | | Check the harness.<br>1. Check for blockage around the upper limit switch.<br>2. Replace the upper limit switch. |

| No. | Type | Details (Symptom, Possible Cause, Troubleshooting Procedures) |
|---|---|---|
| 798<br>-2 | B | Finisher jogger motor error |
| | | The jogger fences move out of the home position but the HP sensor output does not change within the specified number of pulses.<br>The 1st failure issues an original jam message, and the 2nd failure issues this SC code. |
| | | ▪ Jogger HP sensor disconnected, defective<br>▪ Jogger motor disconnected, defective<br>▪ Jogger motor overloaded due to obstruction<br>▪ Finisher main board and jogger motor |
| | | 1. Check or replace the harness.<br>2. Check for blockages in the jogger motor mechanism.<br>3. Replace the jogger HP sensor.<br>4. Replace the jogger motor.<br>5. Replace the finisher main board. |

| No. | Type | Details (Symptom, Possible Cause, Troubleshooting Procedures) |
|---|---|---|
| 798<br>-3 | B | Rear fence motor error |
| | | The rear jogger fence motor in the finisher is not operating. |
| | | ▪ Rear jogger motor drive is obstructed (jammed paper, paper scraps, etc.)<br>▪ The rear jogger fence motor harness loose or broken<br>▪ Rear jogger fence HP sensor dirty, loose, defective<br>▪ Rear jogger fence motor defective |
| | | 1. Check or replace the harness.<br>2. Check for blockages in the rear jogger motor drive mechanism.<br>3. Replace the rear jogger fence HP sensor.<br>4. Replace the rear jogger fence motor. |

| No. | Type | Details (Symptom, Possible Cause, Troubleshooting Procedures) |
|---|---|---|
| 798<br>-4 | B | Stack feed-out motor error |
| | | The stack feed-out HP sensor does not detect the home position of the stack feed-out belt for a certain time after the stack feed-out belt has moved to its home position.<br>The stack feed-out HP sensor does not turn off for a certain time after the stack feed-out belt has moved from its home position.<br>The 1st detection failure causes a jam error, and the 2nd failure causes this SC code. |
| | | ▪ Defective stack feed-out HP sensor<br>▪ Overload on the stack feed-out motor<br>▪ Defective stack feed-out motor<br>▪ Defective main board<br>▪ Disconnected or defective harness |
| | | 1. Check or replace the harness.<br>2. Check for blockages in the stack feed-out mechanism.<br>3. Replace the stack feed-out HP sensor.<br>4. Replace the stack feed-out motor.<br>5. Replace the main board. |

| No. | Type | Details (Symptom, Possible Cause, Troubleshooting Procedures) |
|---|---|---|
| 798<br>-5 | B | Positioning roller arm motor error |
| | | The positioning roller HP sensor does not turn on or off for a certain time at power-on.<br>The positioning roller HP sensor does not turn on or off for a certain time when the positioning roller returns to its home position from the lower position.<br>The 1st detection failure causes a jam error, and the 2nd failure causes this SC code. |
| | | ▪ Disconnected or defective harness<br>▪ Overload on the positioning roller arm motor<br>▪ Defective positioning roller arm motor<br>▪ Defective positioning roller HP sensor |
| | | 1. Check or replace the harness.<br>2. Check for blockages in the positioning roller arm mechanism.<br>3. Replace the positioning roller arm motor.<br>4. Replace the positioning roller HP sensor. |

| No. | Type | Details (Symptom, Possible Cause, Troubleshooting Procedures) |
|---|---|---|
| 798<br>-6 | B | Finisher corner stapler motor error |
| | | The 1st detection failure issues a jam error, and the 2nd failure issues this SC code.<br>**For 500-sheet finisher**<br>▪ The stapler HP sensor does not detect "ON"/"OFF" signal even the stapler moves from the "OFF"/"ON" position for 0.6 seconds.<br>▪ The stapler HP sensor does not detect "ON" when a stapling job is commanded or the stapler moves. |
| | | ▪ Staple jam<br>▪ Motor overload<br>▪ Defective stapler motor |
| | | 1. Check the connections and cables for the components mentioned above.<br>2. Replace the HP sensor and/or stapler motor<br>3. Replace the finisher main board. |

| No. | Type | Details (Symptom, Possible Cause, Troubleshooting Procedures) |
|---|---|---|
| 798<br>-7 | B | Finisher stapler movement motor error |
| | | **For 500-sheet finisher**<br>▪ The stapler HP sensor does not detect "OFF" signal even the stapler moves from the "ON" position for 0.35 seconds.<br>▪ The stapler HP sensor does not detect "ON" signal even the stapler moves from the "OFF" position for 5.5 seconds. |
| | | ▪ Motor overload<br>▪ Loose connection of the stapler home position sensor<br>▪ Loose connection of the stapler movement motor<br>▪ Defective stapler home position sensor<br>▪ Defective stapler movement motor |
| | | 1. Check the connection of the stapler movement motor.<br>2. Check the connection of the stapler home position sensor.<br>3. Replace the stapler home position sensor.<br>4. Replace the stapler movement motor. |

| No. | Type | Details (Symptom, Possible Cause, Troubleshooting Procedures) |
|---|---|---|
| 798<br>-8 | B | 500-sheet finisher: Tray lift motor error |
| | | ▪ Motor overload<br>▪ Loose connection of the shift tray motor<br>▪ Defective shift tray motor |
| | | 1. Check the connections to the tray lift motor.<br>2. Replace the tray lift motor. |

| No. | Type | Details (Symptom, Possible Cause, Troubleshooting Procedures) |
|---|---|---|
| 798<br>-9 | B | Stack pressure solenoid error |
| | | The stack pressure solenoid in the finisher is not operating. |
| | | ▪ Solenoid harness loose, broken<br>▪ Solenoid obstructed<br>▪ Stack height sensor dirty, harness loose, broke<br>▪ Solenoid defective<br>▪ Stack height sensor defective |
| | | 1. Check or replace the solenoid harness.<br>2. Check for blockages in the stack pressure mechanism.<br>1. Replace the stack height sensor. |

## 3.1.9 SC8XX: OVERALL SYSTEM

| No. | Type | Details (Symptom, Possible Cause, Troubleshooting Procedures) |
|---|---|---|
| 816 | CTL D | Energy saving I/O sub-system error |
| | | The energy saving I/O sub-system detects an error. |
| | | ▪ Controller board defective |
| | | Replace the controller board. |

| No. | Type | Details (Symptom, Possible Cause, Troubleshooting Procedures) | |
|---|---|---|---|
| 819 | CTL C | Fatal kernel error | |
| | | Due to a control error, a RAM overflow occurred during system processing. One of the following messages was displayed on the operation panel. | |
| [0x5032] | | HAIC-P2 error | ▪ System program defective<br>▪ Controller board defective<br>▪ Optional board defective<br>Replace controller firmware |
| [0x5245] | | vm_pageout: VM is full | |
| [0x5355] | | L2 status time out | |
| [554C] | | USB error | |

| No. | Type | Details (Symptom, Possible Cause, Troubleshooting Procedures) |
|---|---|---|
| 820 | CTL<br>D | Self-diagnostics error: CPU<br>[XXXX]: Detailed error code |
| [0612] | | Cut-in in ASIC occurs. |
| | | ▪ Defective ASIC<br>▪ Defective devices in which ASIC detects cut-in. |
| | | Replace the controller board. |

⇒

| No. | Type | Details (Symptom, Possible Cause, Troubleshooting Procedures) |
|---|---|---|
| 821 | D | [0B00]<br>ASIC error<br>The write-&-verify check error has occurred in the ASIC. |
| | | • Defective ASIC device |
| | | Replace the controller board. |
| | D | [0B06]<br>ASIC detection error<br>The I/O ASIC for system control is not detected. |
| | | • Defective ASIC<br>• Defective North Bridge and PCI I/F |
| | | Replace the controller board. |
| | D | [0D05] |
| | | Self-diagnosis error: ASIC<br>The CPU checks if the ASIC timer works correctly compared with the CPU timer. If the ASIC timer does not function in the specified range, this SC code is displayed. |

| No. | Type | Details (Symptom, Possible Cause, Troubleshooting Procedures) |
|---|---|---|
| | | • System firmware problem<br>• Defective RAM-DIMM<br>• Defective controller |
| | | Replace the controller board. |
| | D | [50A1] |
| | | Video bridge device (ASIC) error 1<br>The CPU does not detect the video bridge device. |
| | | • Defective I/F between the video bridge device and controller |
| | | [50A2]<br>Video bridge device (ASIC) register error 1<br>The CPU detects the video bridge device, but detects error data from the video bridge device. |
| | | • Defective I/F between the video bridge device and controller |

⇒

| No. | Type | Details (Symptom, Possible Cause, Troubleshooting Procedures) |
|---|---|---|
| 822 | D | [3003]<br>Check performed only when HDD is installed:<br><br>1. HDD device busy for over 31 s.<br>2. After a diagnostic command is set for the HDD, but the device remains busy for over 6 s. |
| | | • HDD defective<br>• HDD harness disconnected, defective<br>• Controller board defective |
| | D | [3004]<br>No response to the self-diagnostic command from the ASIC to the HDDs. |

| No. | Type | Details (Symptom, Possible Cause, Troubleshooting Procedures) |
|---|---|---|
| | | • HDD defective |

⇒

| No. | Type | Details (Symptom, Possible Cause, Troubleshooting Procedures) |
|---|---|---|
| 823 | D | Self-diagnostic error: NIB<br><br>[6101]<br>MAC address check sum error<br>The result of the MAC address check sum does not match the check sum stored in ROM<br><br>[6104]<br>PHY IC error<br>The PHY IC on the controller cannot be correctly recognized.<br><br>[6105]<br>PHY IC loop-back error<br>An error occurred during the loop-back test for the PHY IC on the controller. |

⇒

| No. | Type | Details (Symptom, Possible Cause, Troubleshooting Procedures) |
|---|---|---|
| 824 | D | [1401]<br>Self-diagnosis error: Standard NVRAM<br>The controller cannot recognize the standard NVRAM installed or detects that the<br>NVRAM is defective. |
| | | • Loose connection<br>• Defective standard NVRAM<br>• Defective controller |

| No. | Type | Details (Symptom, Possible Cause, Troubleshooting Procedures) |
|---|---|---|
| | | 1. Check the standard NVRAM is firmly inserted into the socket.<br>2. Replace the NVRAM.<br>3. Replace the controller |

| No. | Type | Details (Symptom, Possible Cause, Troubleshooting Procedures) |
|---|---|---|
| 826 | D | Self-diagnostic Error: RTC/optional NVRAM<br><br>[1501]<br>The one second counted by the RTC is different from the one second counted by the CPU on the controller |
| | | • Defective the RTC device |
| | D | [15FF]<br><br>The RTC device is not detected. |
| | | • Defective the RTC device<br>• NVRAM without RTC installed<br>• Discharged backup battery |

| No. | Type | Details (Symptom, Possible Cause, Troubleshooting Procedures) |
|---|---|---|
| 827 | D | Self-diagnostic error: Standard SDRAM DIMM<br><br>[0201]<br>Verification error<br><br>Error detected during a write/verify check for the standard RAM (SDRAM DIMM). |
| | | • Loose connection<br>• Defective SDRAM DIMM<br>• Defective controller |

| No. | Type | Details (Symptom, Possible Cause, Troubleshooting Procedures) |
|---|---|---|
| 828 | D | Self-diagnostic error: ROM<br><br>[0101]<br>Check sum error 1<br><br>The boot monitor and OS program stored in the ROM DIMM is checked. If the check sum of the program is incorrect, this SC code is displayed. |

| No. | Type | Details (Symptom, Possible Cause, Troubleshooting Procedures) |
|---|---|---|
| 829 | D | Self-diagnostic error: Optional RAM<br><br>[0301]<br>Verification error<br><br>Error detected during a write/verify check for the optional RAM (SDRAM DIMM). |
| | | • Loose connection<br>• Defective SDRAM DIMM<br>• Defective controller |
| | | 1. Turn the main switch OFF and ON.<br>2. Replace the SDRAM DIMM.<br>3. Replace the controller. |
| | D | [0302]<br>Memory structure data error<br><br>The memory structure data error for the optional RAM (SDRAM DIMM) is detected when the self-diagnostic is executed. |

| No. | Type | Details (Symptom, Possible Cause, Troubleshooting Procedures) |
|---|---|---|
| | | • Defective RAM DIMM<br>• Defective SPD ROM on RAM DIMM<br>• Defective 12C bus |
| | | Replace the RAM DIMM. |

| No. | Type | Details (Symptom, Possible Cause, Troubleshooting Procedures) |
|---|---|---|
| 833 | CTL C | Self-diagnostic error 8: Engine I/F ASIC |
| [0F30]<br>[0F31] | | ▪ ASIC (Mandolin) for system control could not be detected. After the PCI configuration, the device ID for the ASIC could not be checked. |
| | | Replace the VBCU |
| [0F41] | | ▪ ASIC (Mandolin) for system control could not be detected. After the PCI configuration, the device ID for the ASIC could not be checked. |
| | | Replace the VBCU |
| [50B1] | | Could not initialize or read the bus connection. |
| | | ▪ Check for loose connections at the mother board. |
| | | Replace the mother board |
| [50B2] | | Value of the SSCG register is incorrect. |
| | | ▪ Check for loose connections at the mother board. |
| | | Replace the mother board |

| No. | Type | Details (Symptom, Possible Cause, Troubleshooting Procedures) |
|---|---|---|
| 851 | CTL B | IEEE1394 interface error |
| | | The 1394 interface is unusable. |
| | | ▪ Defective IEEE1394<br>▪ Defective controller. |
| | | 1. Turn the main switch off and on.<br>2. Replace the IEEE1394 interface board.<br>3. Replace the controller. |

| No. | Type | Details (Symptom, Possible Cause, Troubleshooting Procedures) |
|---|---|---|
| 853 | CTL B | Wireless LAN card not detected |
| | | The wireless LAN card is not detected before communication is established, though the wireless LAN board is detected. |
| | | ▪ Loose connection |
| | | Check the connection. |

| No. | Type | Details (Symptom, Possible Cause, Troubleshooting Procedures) |
|---|---|---|
| 854 | CTL B | Wireless LAN/Bluetooth card not detected |
| | | The wireless LAN/Bluetooth card is not detected after communication is established, but the wireless LAN board is detected. |
| | | ▪ Loose connection |
| | | Check the connection. |

| No. | Type | Details (Symptom, Possible Cause, Troubleshooting Procedures) |
|---|---|---|
| 855<br>856 | CTL<br>B | Wireless LAN/Bluetooth card error |
| | | An error is detected in the wireless LAN/Bluetooth card. |
| | | ▪ Loose connection<br>▪ Defective wireless LAN/Bluetooth card |
| | | 1. Check the connection.<br>2. Replace the wireless LAN/Bluetooth card. |

| No. | Type | Details (Symptom, Possible Cause, Troubleshooting Procedures) |
|---|---|---|
| 857 | CTL<br>B | USB interface error |
| | | The USB interface cannot be used due to a driver error. |
| | | ▪ Defective USB driver<br>▪ Loose connection |
| | | 1. Check the connection.<br>2. Replace the USB board. |

| No. | Type | Details (Symptom, Possible Cause, Troubleshooting Procedures) | |
|---|---|---|---|
| 858 | CTL C | HDD Encryption unit error 1 | |
| | | A serious error occurs when data is encrypted to update an encryption key with the HDD encryption unit. | |
| | | [0] | Encryption key acquisition error:<br>The controller fails to get a new encryption key. |
| | | | ▪ Defective controller board<br>1. Replace the controller board. |
| | | [1] | Encryption key setting for HDD error:<br>The controller fails to copy a new encryption key to the HDD. |
| | | | ▪ Defective SATA chip on the controller board<br>1. Replace the controller board. |
| | | [2] | NVRAM data encryption error 1:<br>An error occurs while the NVRAM data is encrypted. |
| | | | ▪ Defective NVRAM on the controller board<br>1. Replace the NVRAM. |
| | | [30] | NVRAM data encryption error 2:<br>An error occurs before the NVRAM data is encrypted. |
| | | | ▪ Defective controller board<br>1. Replace the controller board. |
| | | [30] | Other error:<br>A serious error occurs while the data is encrypted. |
| | | | ▪ Same as SC991 |

| No. | Type | Details (Symptom, Possible Cause, Troubleshooting Procedures) | |
|---|---|---|---|
| 859 | CTL C | HDD Encryption unit error 2 | |
| | | A serious error occurs when the HDD data is encrypted to update an encryption key with the HDD encryption unit. | |
| | | [8] | HDD check error:<br>The HDD is not correctly installed. |
| | | | ▪ No HDD installed<br>▪ Unformatted HDD<br>▪ The encryption key on the controller is different from the one on the HDD<br>1. Install the HDD correctly.<br>1. Initialize the HDD. |
| | | [9] | Power failure during the data encryption:<br>The data encryption (NVRAM and HDD) has not been completed. |
| | | | ▪ Power failure during the data encryption<br>1. Initialize the HDD. |
| | | [10] | Data read/write error:<br>The DMAC error is detected twice or more. |
| | | | ▪ Same as SC863 |

| No. | Type | Details (Symptom, Possible Cause, Troubleshooting Procedures) |
|---|---|---|
| 860 | CTL B | HDD: Initialization error |
| | | The controller detects that the hard disk fails. |
| | | ▪ HDD not initialized<br>▪ Defective HDD |
| | | 1. Reformat the HDD.<br>2. Replace the HDD. |

| No. | Type | Details (Symptom, Possible Cause, Troubleshooting Procedures) |
|---|---|---|
| 861 | CTL D | HDD: Reboot error |
| | | The HDD does not become ready within 30 seconds after the power is supplied to the HDD. |
| | | ▪ Loose connection<br>▪ Defective cables<br>▪ Defective HDD<br>▪ Defective controller |
| | | 1. Check the connection between the HDD and controller.<br>2. Check and replace the cables.<br>3. Replace the HDD.<br>4. Replace the controller. |

| No. | Type | Details (Symptom, Possible Cause, Troubleshooting Procedures) |
|---|---|---|
| 863 | CTL D | HDD: Read error |
| | | The data stored in the HDD cannot be read correctly. |
| | | ▪ Defective HDD<br>▪ Defective controller |
| | | 1. Replace the HDD.<br>2. Replace the controller. |

| No. | Type | Details (Symptom, Possible Cause, Troubleshooting Procedures) |
|---|---|---|
| 864 | CTL D | HDD: CRC error |
| | | While reading data from the HDD or storing data in the HDD, data transmission fails. |
| | | ▪ Defective HDD |
| | | Replace the HDD. |

| No. | Type | Details (Symptom, Possible Cause, Troubleshooting Procedures) |
|---|---|---|
| 865 | CTL D | HDD: Access error |
| | | An error is detected while operating the HDD. |
| | | ▪ Defective HDD |
| | | Replace the HDD. |

| No. | Type | Details (Symptom, Possible Cause, Troubleshooting Procedures) |
|---|---|---|
| 866 | CTL B | SD card authentication error |
| | | A correct license is not found in the SD card. |
| | | ▪ SD-card data is corrupted. |
| | | Store correct data in the SD card. |

| No. | Type | Details (Symptom, Possible Cause, Troubleshooting Procedures) |
|---|---|---|
| 867 | CTL D | SD card error |
| | | The SD card is ejected from the slot. |
| | | 1. Install the SD card.<br>2. Turn the main switch off and on. |

| No. | Type | Details (Symptom, Possible Cause, Troubleshooting Procedures) |
|---|---|---|
| 868 | CTL D | SD card access error<br>▪ -13 to -3: File system error<br>▪ Other number: Device error |
| | | An error report is sent from the SD card reader.<br>▪ An error is detected in the SD card. |
| | | 1. For a file system error, format the SD card on your PC.<br>2. For a device error, turn the mains switch off and on.<br>3. Replace the SD card.<br>4. Replace the controller. |

| No. | Type | Details (Symptom, Possible Cause, Troubleshooting Procedures) |
|---|---|---|
| 870 | CTL B | Address book error |
| | | An error is detected in the data copied to the address book over a network. |
| | | ▪ Defective software program<br>▪ Defective HDD<br>▪ Incorrect path to the server |
| | | 1. Initialize the address book data (SP5-846-050).<br>2. Initialize the user information (SP5-832-006).<br>3. Replace the HDD. |

| No. | Type | Details (Symptom, Possible Cause, Troubleshooting Procedures) |
|---|---|---|
| 872 | CTL B | HDD mail data error |
| | | An error is detected in the HDD at machine initialization. |
| | | ▪ Defective HDD<br>▪ Power failure during an access to the HDD |
| | | 1. Turn the main switch off and on.<br>2. Initialize the HDD partition (SP5-832-007).<br>3. Replace the HDD. |

| No. | Type | Details (Symptom, Possible Cause, Troubleshooting Procedures) |
|---|---|---|
| 873 | CTL B | HDD mail transfer error |
| | | An error is detected in the HDD at machine initialization. |
| | | ▪ Defective HDD<br>▪ Power failure during an access to the HDD |
| | | 1. Initialize the HDD partition (SP5-832-008).<br>2. Replace the HDD. |

| No. | Type | Details (Symptom, Possible Cause, Troubleshooting Procedures) |
|---|---|---|
| 874 | CTL D | Delete All error 1: HDD |
| | | An error is detected while all of the HDD or NVRAM are formatted physically by the Data Overwrite Security Unit (D377). |
| | | ▪ Data Overwrite Security Unit (SD card) not installed<br>▪ Defective HDD |
| | | 1. Install the Data Overwrite Security Unit (D377).<br>2. Replace the HDD. |

| No. | Type | Details (Symptom, Possible Cause, Troubleshooting Procedures) |
|---|---|---|
| 875 | CTL D | Delete All error 2: Data area |
| | | An error is detected while all of the HDD or NVRAM are formatted logically by the Data Overwrite Security Unit (D377). |
| | | ▪ The logical format for the HDD fails. |
| | | Turn the main switch off/on and try the operation again |

| No. | Type | Details (Symptom, Possible Cause, Troubleshooting Procedures) |
|---|---|---|
| 876 | CTL D | Log Data Error |
| | | An error was detected in the handling of the log data at power on or during machine operation. This can be caused by switching the machine off while it is operating. |
| -001 | | Log Data Error 1 |
| | | ▪ Damaged log data file in the HDD |
| | | Initialize the HDD with SP5832-004. |
| -002 | | Log Data Error 2 |
| | | ▪ An encryption module not installed |
| | | 1. Disable the log encryption setting with SP9730-004 ("0" is off.)<br>2. Install the DESS module. |
| -003 | | Log Data Error 3 |
| | | ▪ Invalid log encryption key due to defective NVRAM data |
| | | 1. Initialize the HDD with SP5832-004.<br>2. Disable the log encryption setting with SP9730-004 ("0" is off.) |
| -004 | | Log Data Error 4 |
| | | ▪ Unusual log encryption function due to defective NVRAM data |
| | | Initialize the HDD with SP5832-004. |
| -005 | | Log Data Error 5 |
| | | ▪ Installed NVRAM or HDD which is used in another machine |
| | | 1. Reinstall the previous NVRAM or HDD.<br>2. Initialize the HDD with SP5832-004. |

| No. | Type | Details (Symptom, Possible Cause, Troubleshooting Procedures) |
|---|---|---|
| | -099 | Log Data Error 99 |
| | | ▪ Other than the above causes |
| | | Ask your supervisor. |

| No. | Type | Details (Symptom, Possible Cause, Troubleshooting Procedures) |
|---|---|---|
| 877 | CTL D | HDD Data Overwrite Security SD card error |
| | | The 'all delete' function cannot be executed but the Data Overwrite Security Unit (D377) is installed and activated. |
| | | ▪ Defective SD card (D377)<br>▪ SD card (D377) not installed |
| | | 1. Replace the NVRAM and then install the new SD card (D377).<br>2. Check and reinstall the SD card (D377). |

| No. | Type | Details (Symptom, Possible Cause, Troubleshooting Procedures) |
|---|---|---|
| 878 | CTL D | TPM system authentication error |
| | | The system firmware is not authenticated by TPM (security chip). |
| | | ▪ Incorrect updating for the system firmware<br>▪ Defective flash ROM on the controller board<br>Replace the controller board. |

| No. | Type | Details (Symptom, Possible Cause, Troubleshooting Procedures) |
|---|---|---|
| 880 | CTL D | File format converter error |
| | | The file format converter does not respond. |
| | | ▪ Defective file format converter |
| | | Replace the file format converter. |

## 3.1.10 SC9XX: MISCELLANEOUS

| No. | Type | Details (Symptom, Possible Cause, Troubleshooting Procedures) |
|---|---|---|
| 900 | CTL D | Electric counter error |
| | | Abnormal data in the counters. |
| | | ▪ Defective NVRAM<br>▪ Defective controller |
| | | 1. Check the connection between the NVRAM and controller.<br>2. Replace the NVRAM.<br>3. Replace the controller. |

| No. | Type | Details (Symptom, Possible Cause, Troubleshooting Procedures) |
|---|---|---|
| 910 | CTL D | External Controller Error 1 |
| 911 | | External Controller Error 2 |
| 912 | | External Controller Error 3 |
| 913 | | External Controller Error 4 |
| 914 | | External Controller Error 5 |
| - | - | The external controller alerted the machine about an error. |
| - | - | ▪ Please refer to the instructions for the external controller (application). |

| No. | Type | Details (Symptom, Possible Cause, Troubleshooting Procedures) |
|---|---|---|
| 919 | CTL D | External Controller Error 6 |
| | | While EAC (External Application Converter), the conversion module, was operating normally, the receipt of a power line interrupt signal from the FLUTE serial driver was detected, or BREAK signal from the other station was detected. |
| | | ▪ Power outage at the EFI controller<br>▪ EFI controller was rebooted<br>▪ Connection to EFI controller loose |

| No. | Type | Details (Symptom, Possible Cause, Troubleshooting Procedures) |
|---|---|---|
| 920 | CTL D | Printer application error |
| | | An error is detected in the printer application program. |
| | | ▪ Defective software<br>▪ Unexpected hardware resource (e.g., memory shortage) |
| | | 1. Software defective; switch off/on, or change the controller firmware if the problem is not solved<br>2. Insufficient memory |

| No. | Type | Details (Symptom, Possible Cause, Troubleshooting Procedures) |
|---|---|---|
| 921 | CTL D | Printer font error |
| | | A necessary font is not found in the SD card. |
| | | ▪ A necessary font is not found in the SD card.<br>▪ The SD card data is corrupted. |
| | | Check that the SD card has the correct data. |

| No. | Type | Details (Symptom, Possible Cause, Troubleshooting Procedures) |
|---|---|---|
| 990 | CTL D | Software performance error |
| | | The software makes an unexpected operation. |
| | | ▪ Defective software<br>▪ Defective controller<br>▪ Software error |
| | | 1. Turn the main switch off and on.<br>2. Reinstall the controller and/or engine main firmware. |
| | | Note<br>▪ See Note 1 at the end of the SC table. |

| No. | Type | Details (Symptom, Possible Cause, Troubleshooting Procedures) |
|---|---|---|
| 991 | CTL C | Software continuity error |
| | | The software has attempted to perform an unexpected operation. However, unlike SC 990, the object of the error is continuity of the software. |
| | | ▪ Software program error<br>▪ Internal parameter incorrect, insufficient working memory. |
| | | This SC is not displayed on the LCD (logging only). |

| No. | Type | Details (Symptom, Possible Cause, Troubleshooting Procedures) |
|---|---|---|
| 992 | CTL D | Undefined error |
| | | Defective software program |
| | | ▪ An error undetectable by any other SC code occurred |

| No. | Type | Details (Symptom, Possible Cause, Troubleshooting Procedures) |
|---|---|---|
| 994 | CTL C | Operation panel management records exceeded |
| | | An error occurred because the number of records exceeded the limit for images managed in the service layer of the firmware. This can occur if there if there are too many application screens open on the operation panel. |
| | | ▪ No action required because this SC does not interfere with operation of the machine. |

| No. | Type | Details (Symptom, Possible Cause, Troubleshooting Procedures) |
|---|---|---|
| 995 | D | CPM setting error |
| | -001 | ▪ Defective BICU<br>▪ NVRAM Replacement error |
| | | 1. Install the previous NVRAM.<br>2. Input the serial number with SP5811-004, and turn the main power switch off/on. |
| | -002 | ▪ Defective NVRAM<br>▪ Defective controller |
| | | 1. Update the controller firmware.<br>2. Install a new NVRAM, and turn off and on the main power switch after SC995-002 has occurred. |
| | -003 | ▪ Incorrect type controller installed<br>▪ Defective controller |
| | | 1. Replace the controller with the correct type. |
| | -004 | ▪ Incorrect model controller installed. |
| | | 1. Replace the controller with the correct model. |

| No. | Type | Details (Symptom, Possible Cause, Troubleshooting Procedures) |
|---|---|---|
| 997 | CTL B | Application function selection error<br>▪ The application selected by the operation panel key does not start or ends abnormally. |
| | | ▪ Software (including the software configuration) defective<br>▪ An option required by the application (RAM, DIMM, board) is not installed<br>▪ Nesting of the fax group addresses is too complicated |
| | | 1. Check the devices necessary for the application program. If necessary devices have not been installed, install them.<br>2. Check that application programs are correctly configured.<br>3. For a fax operation problem, simplify the nesting of the fax group addresses.<br>4. Take necessary countermeasures specific to the application program. If the logs can be displayed on the operation panel, see the logs. |

| No. | Type | Details (Symptom, Possible Cause, Troubleshooting Procedures) |
|---|---|---|
| 998 | CTL D | Application start error |
| | | No applications start within 60 seconds after the power is turned on. |
| | | ▪ Loose connection of RAM-DIMM, ROM-DIMM<br>▪ Defective controller<br>▪ Software problem |
| | | 1. Check the setting of SP5875-001. If the setting is set to "1 (OFF)", change it to "0 (OFF)".<br>2. Check if the RAM-DIMM and ROM-DIMM are correctly connected.<br>3. Reinstall the controller system firmware.<br>4. Replace the controller. |

**Note 1**

If a problem always occurs in a specific condition (for example. printer driver setting, image file), the problem may be caused by a software error. In this case, the following data and information needs to be sent back to your product specialist. Please understand that it may take some time to get a reply on how to solve the problem, because in some cases the design staff in Japan must analyze the data.

- Symptom / Possible Causes / Action taken
- Summary sheet (SP mode “Printer SP”, SP1-004 [Print Summary])
- SMC - All (SP5-990-001)
- SMC - Logging (SP5-990-004)
- Printer driver settings used when the problem occurs
- All data displayed on the screen (SC code, error code, and program address where the problem is logged.)
- Image file which causes the problem, if possible

# APPENDIX:
# PROCESS CONTROL ERROR CONDITIONS

| APPENDIX 4 PROCESS CONTROL ERROR CONDITIONS REVISION HISTORY | | |
|---|---|---|
| **Page** | **Date** | **Added/Updated/New** |
| | | None |

# 4. APPENDIX: PROCESS CONTROL ERROR CONDITIONS

## 4.1 PROCESS CONTROL ERROR CONDITIONS

### 4.1.1 DEVELOPER INITIALIZATION RESULT

**SP-3-014-001 (Developer Initialization Result)**

| No. | Result | Description | Possible Causes/Action |
|---|---|---|---|
| 1 | Successfully completed | Developer initialization is successfully completed. | - |
| 2 | Forced termination | Developer initialization was forcibly terminated. | ▪ A cover was opened or the main switch was turned off during the initialization.<br>1. Do the developer initialization again when done in SP mode. Reinstall the engine main firmware if the result is the same.<br>2. Turn the main switch off and on when done at unit replacement. |
| 6 | Vt error | Vt is more than 0.7V when Vcnt is 4.3V. | 1. Make sure that the heat seal on the development unit is not removed.<br>2. Defective TD sensor |
| 7 | Vcnt error 1 | Vcnt is less than 4.7V when Vcnt is Vt target ±0.2V. | 1. Defective TD sensor<br>2. Vt target settings are not correct.<br>3. Toner density error |

Process Control Error Conditions

| No. | Result | Description | Possible Causes/Action |
|---|---|---|---|
| 8 | Vcnt error 2 | Vt is more than 0.7V when Vcnt is 4.3V and Vcnt is less than 4.7V when Vcnt is Vt target ±0.2V. | 1. Make sure that the heat seal on the development unit is not removed.<br>2. Defective TD sensor |
| 9 | Vcnt error 3 | Vcnt is less than 4.7V. | 1. Make sure that the heat seal on the development unit is not removed<br>2. Defective TD sensor<br>3. Vt target settings are not correct.<br>4. Toner density error |

Note

- The machine starts developer initialization after you set “Enable” in SP3-902-005, 006, 007, or 008. Developer initialization automatically resumes when you open and close the front door or turn the main switch off and on if an error other than Error 8 occurs.

## 4.1.2 PROCESS CONTROL SELF-CHECK RESULT

Displayed number shows results of each color sensor check.

00000000 = YYCCMMKK

**SP3-012-001 to -010 (Process Control Self-check Result)**

| No. | Result | Description | Possible Causes/Action |
|---|---|---|---|
| 11 | Successfully completed | Process control self-check successfully completed. | Check the Vsg adjustment. See the "Vsg Adjustment Result" following this table. |
| 41 | Vt error | Vt maximum or minimum error is detected. | ▪ Defective development unit<br>Vt maximum error and an image is faint:<br>1. Replace the toner supply pump unit.<br>Vt maximum error and an image is O.K:<br>1. Replace the development unit.<br>2. Replace the IOB board.<br>Vt minimum error:<br>1. Replace the development unit.<br>2. Replace the IOB board. |
| 53 | ID sensor coefficient (K5) detection error | Not enough data can be sampled. | ▪ Solid image is not sufficient density:<br>1. Retry the process control.<br>2. Replace the ID sensors.<br>3. Replace the IOB board.<br>▪ Solid image is O.K.<br>1. Replace the ID sensors.<br>2. Replace the IOB board.<br>▪ ID sensor is dirty:<br>1. Clean the ID sensors.<br>2. Retry the process control. |

Process Control Error Conditions

| No. | Result | Description | Possible Causes/Action |
|---|---|---|---|
| 54 | ID sensor coefficient (K5) maximum/ minimum error | When the K5 is more than the value of SP3-362-003 or less than the value of SP3-362-004, the error 54 is displayed. | ▪ ID sensor pattern density is too high or low.<br>▪ ID sensor or shutter is defective.<br>Same as 53 |
| 55 | Gamma error: Maximum | Gamma is out of range. 5.0 < Gamma | ▪ ID sensor pattern density is too high.<br>▪ Hardware defective.<br>Same as 53 |
| 56 | Gamma error: Minimum | Gamma is out of range.<br>Gamma < 0.15 | ▪ ID sensor pattern density is too low.<br>▪ Hardware defective.<br>1. Same as 53<br>2. Replace the toner supply pump unit. |
| 57 | Vk error: Maximum | Vk is out of range.<br>150 < Vk | ▪ ID sensor pattern density is too low.<br>▪ Hardware defective.<br>Same as 53 |
| 58 | Vk error: Minimum | Vk is out of range.<br>Vk < –150 | ▪ ID sensor pattern density is too high.<br>▪ Background dirty<br>▪ Hardware defective<br>Same as 53 |
| 59 | Sampling data error during gamma correction | Not enough data can be sampled during the gamma correction. | ▪ ID sensor pattern density is too high or low.<br>▪ Hardware defective<br>Same as 53 |
| 99 | Unexpected error | Process control fails. | ▪ Power Failure<br>Check the power source. |

## *Vsg Adjustment Result*

**SP3-325-001 to -010 (Vsg Adjustment Result)**

| No. | Result | Description | Possible Causes/Action |
|---|---|---|---|
| 1 | O.K | Vsg adjustment is correctly done. | - |
| 2 | ID sensor adjustment error | Vsg cannot be adjusted within 4.0 ±0.5V. | ▪ Dirty ID sensor (toner, dust, or foreign material)<br>▪ Dirty transfer belt<br>▪ Scratched image transfer belt<br>▪ Defective ID sensor<br>▪ Poor connection<br>▪ Defective IOB<br>1. Clean the ID sensor.<br>2. Check the belt cleaning. Clean or replace the transfer belt.<br>3. Replace the image transfer belt.<br>4. Replace the ID sensor.<br>5. Check the connection.<br>6. Replace the IOB board. |
| 3 | ID sensor output error | ID sensor output is more than "Voffset Threshold" (SP3-324-004) | ▪ Defective ID sensor<br>▪ Poor connection<br>▪ Defective IOB<br>1. Replace the ID sensor.<br>2. Check the connection.<br>3. Replace the IOB board. |
| 9 | Vsg Adjustment error | Vsg adjustment has not been completed. | ▪ Other cases<br>Retry SP3-321-010. |

## 4.1.3 LINE POSITION ADJUSTMENT RESULT

SP2-194-010 to -012 (Line Position Adjustment Result: M, C, Y)

This SP shows the number as a line position adjustment result on the LCD. It shows which color has an error (M, Y or C).

| No. | Result | Description | Note |
|---|---|---|---|
| 0 | Not done | Line position adjustment has not been done. | - |
| 1 | Completed successfully | Line position adjustment has correctly been done, | - |
| 2 | Cannot detect patterns | ID sensors have not detected the patterns for line position adjustment. | See Note |
| 3 | Fewer lines on the pattern than the target | The patterns, which ID sensors have detected, are not enough for line position adjustment. | See Note |
| 4 | More lines on the pattern than the target | Not used in this machine. | - |
| 5 | Out of the adjustment range | ID sensors have correctly detected the patterns for line position adjustment, but a shift of patterns is out of adjustable range. | See Note |
| 6-9 | Not used | - | - |

Note

- For details, see the "Troubleshooting Guide - Line Position Adjustment" section.

# Appendix:
# Troubleshooting Guide

| APPENDIX 5 TROUBLESHOOTING GUIDE REVISION HISTORY | | |
|---|---|---|
| **Page** | **Date** | **Added/Updated/New** |
| | | None |

# 5. APPENDIX: TROUBLESHOOTING GUIDE

## 5.1 TROUBLESHOOTING GUIDE

### 5.1.1 IMAGE QUALITY

The following work-flow shows the basic troubleshooting steps for the image quality problems on this product.

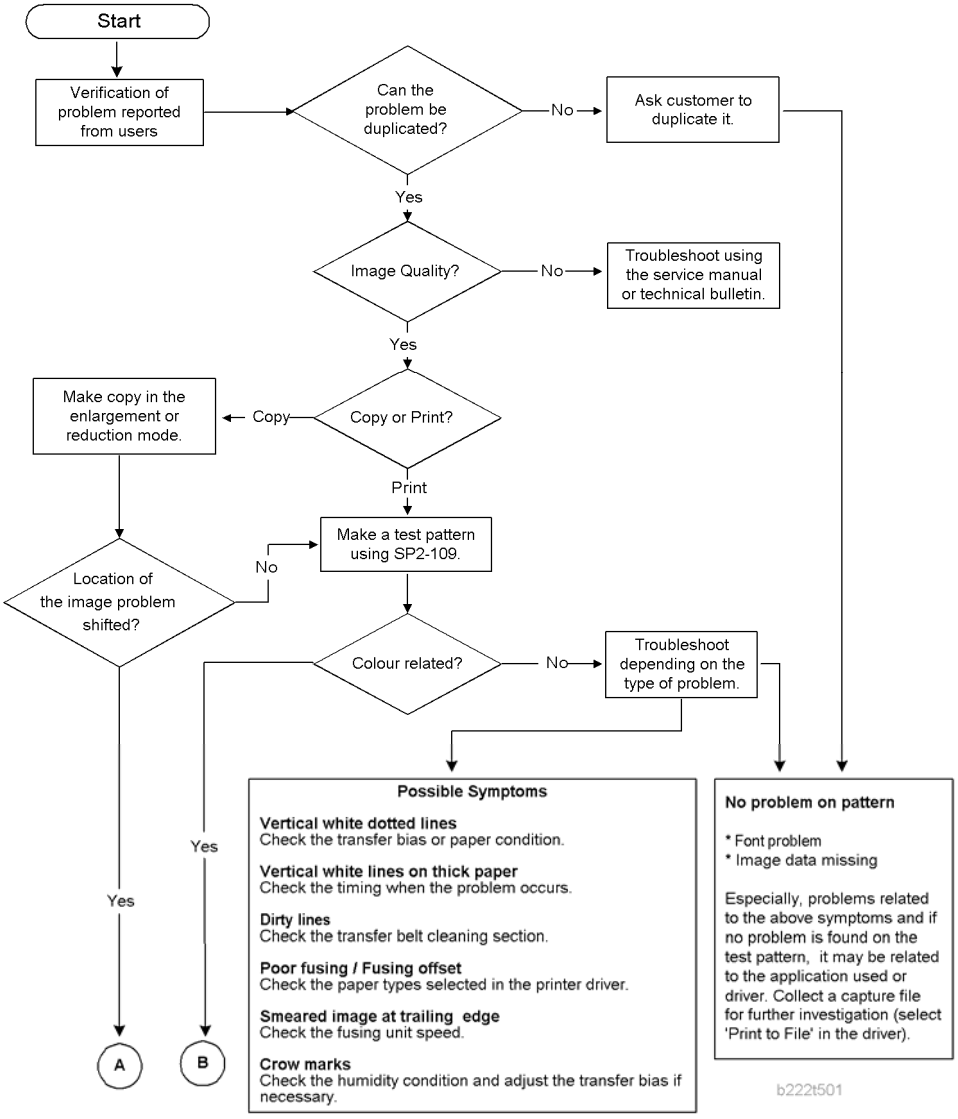

Troubleshooting Guide

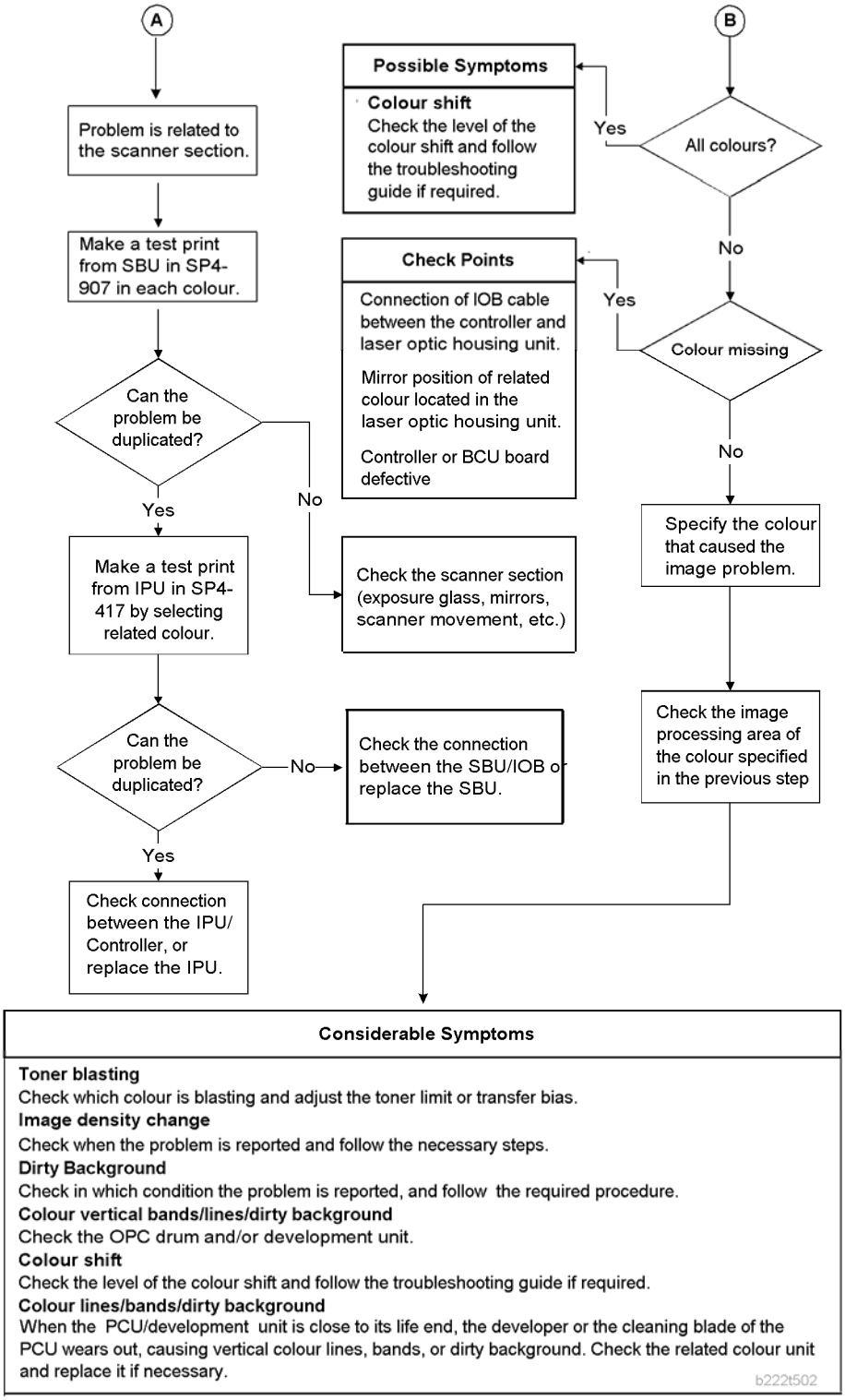


| Considerable Symptoms |
|---|
| **Toner blasting**<br>Check which colour is blasting and adjust the toner limit or transfer bias.<br>**Image density change**<br>Check when the problem is reported and follow the necessary steps.<br>**Dirty Background**<br>Check in which condition the problem is reported, and follow the required procedure.<br>**Colour vertical bands/lines/dirty background**<br>Check the OPC drum and/or development unit.<br>**Colour shift**<br>Check the level of the colour shift and follow the troubleshooting guide if required.<br>**Colour lines/bands/dirty background**<br>When the PCU/development unit is close to its life end, the developer or the cleaning blade of the PCU wears out, causing vertical colour lines, bands, or dirty background. Check the related colour unit and replace it if necessary.<br>b222t502 |

## 5.1.2 LINE POSITION ADJUSTMENT

When there are color registration errors on the output, do the line position adjustment as follows.

Note

- Use A3/DLT size paper for this adjustment.

### *Test*

1. Do SP2-111-003 (Mode c: rough adjustment).
2. Use SP2-194-007 to check if the result of the line position adjustment is correct (0: Completed successfully, 1: Not completed). If the result is "1", refer to 'Countermeasure list for color registration errors'.
3. Do SP2-111-001 (Mode a: fine adjustment twice).
4. Use SP2-194-007 to check if the result of the line position adjustment is correct (0: Completed successfully, 1: Not completed). If the result is "1", refer to 'Countermeasure list for color registration errors'.
5. Put some A3/DLT paper on the by-pass tray.

   Note

   - When you print a test pattern, use the by-pass tray to feed the paper.
6. Print out test pattern "7" with SP2-109-003.
7. Check the printed output with a loupe.
8. If there are no color registration errors on the output, the line position adjustment is correctly done. If not, refer to the countermeasure list for color registration errors.

### *Countermeasure list for color registration errors*

After Executing SP2-111-003

- Result: "1" in SP2-194-007
- Result: "2" or "3" (Line pattern detection failure) in SP2-194-010, -011, -012

Troubleshooting Guide

| Test pattern check | Possible cause/Countermeasure |
|---|---|
| White image, Abnormal image, Low density | ▪ Defective laser optics housing unit shutter<br>▪ Defective image processing unit<br>▪ Low density of test pattern<br>▪ Defective BICU<br>1. Replace the shutter motor.<br>2. Replace the high voltage power supply unit.<br>3. Do the forced process control (SP3-011-001) or supply some toner (SP3-015-xxx).<br>4. Replace the BICU. |
| Normal image, but with color registration errors | ▪ Defective ID sensor shutter<br>▪ Defective ID sensor<br>▪ Defective BICU<br>1. Replace the ID sensor shutter solenoid.<br>2. Replace the ID sensor.<br>3. Replace the BICU. |

After Executing SP2-111-003

- Result: "1" in SP2-194-007
- One of results: "5" (Out of adjustable range) in SP2-194-010, -011, -012.

| Test pattern check | Possible cause/Countermeasure |
|---|---|
| The main scan registrations of M, C, Y are shifted by more than ±15 mm from the main scan registration of K. | ▪ Defective laser optics housing unit<br>▪ Defective BICU<br>1. Replace the laser optics housing unit.<br>2. Replace the BICU. |
| The sub scan registrations of M, C, Y are shifted by more than ±20 mm from the sub scan registration of K. | ▪ Defective image transfer belt<br>▪ Defective drive units<br>▪ Defective BICU<br>1. Replace the image transfer belt.<br>2. Replace the drum motor.<br>3. Replace the BICU. |
| The main scan registration is shifted by more than ±0.66 mm, but only at the central area of the image on the output. | ▪ Defective ID sensor at center<br>▪ Deformed center area on the image transfer belt<br>▪ Defective BICU<br>1. Replace the ID sensor.<br>2. Replace the image transfer belt.<br>3. Replace the BICU. |
| The skew for M, C, Y is more than ±0.75 mm from the main scan registration of K | ▪ Defective PCU<br>▪ Defective laser optics housing unit<br>▪ Defective BICU<br>1. Reinstall or replace the PCU.<br>2. Replace the laser optics housing unit.<br>3. Replace the BICU. |
| Others | ▪ Skew correction upper limit error<br>▪ Defective BICU<br>▪ Defective laser optics housing unit<br>1. Replace the BICU.<br>2. Replace the laser optics housing unit. |

Troubleshooting Guide

After Executing SP2-111-003

- Result: "1" in SP2-194-007
- Result: "0" in SP2-194-010, -011, -012.

| Test pattern check | Possible cause/Countermeasure |
|---|---|
| | Do SP2-111-001 or -002. |

After Executing SP2-111-001

- Result: "1" in SP2-194-007
- Result: "2" or "3" (Line pattern detection failure) in SP2-194-010, -011, -012

| Test pattern check | Possible cause/Countermeasure |
|---|---|
| White image, Abnormal image, Low density | ▪ Defective laser optics housing unit shutter<br>▪ Defective image processing unit<br>▪ Low density of test pattern<br>▪ Defective BICU<br>1. Replace the shutter motor.<br>2. Replace the high voltage power supply unit.<br>3. Do the forced process control (SP3-011-001) or supply some toner (SP3-015-xxx).<br>4. Replace the BICU. |
| Normal image, but with color registration errors | ▪ Defective ID sensor shutter<br>▪ Defective ID sensor<br>▪ Defective BICU<br>1. Replace the ID sensor shutter solenoid.<br>2. Replace the ID sensor.<br>3. Replace the BICU. |

After Executing SP2-111-001

- Result: "1" in SP2-194-007
- Result: "5" (Out of adjustable range) in SP2-194-010, -011, -012

| Test pattern check | Possible cause/Countermeasure |
|---|---|
| Low image density on the output | ▪ Low pattern density<br>Do the forced process control (SP3-011-001) or supply some toner (SP3-015-xxx). |
| The main scan registrations of M, C, Y are shifted by more than ±1.4 mm from the main scan registration of K. | ▪ No defective component<br>▪ Defective laser optics housing unit<br>▪ Defective BICU<br>1. Do SP2-111-003 again.<br>2. Replace the laser optics housing unit.<br>3. Replace the BICU. |
| The sub scan registrations of M, C, Y are shifted by more than ±1.4mm from the sub scan registration of K. | ▪ No defective component<br>▪ Defective image transfer belt<br>▪ Defective drive units<br>▪ Defective BICU<br>1. Do SP2-111-003 again.<br>2. Replace the image transfer belt.<br>3. Replace the drum motor.<br>4. Replace the BICU. |
| The main scan registration is shifted by more than ±0.66 mm, but only at the central area of the image on the output. | ▪ Defective ID sensor at center<br>▪ Deformed center area on the image transfer belt<br>▪ Defective BICU<br>1. Replace the ID sensor.<br>2. Replace the image transfer belt.<br>3. Replace the BICU. |
| The skew for M, C, Y is more than ± 0.75 mm from the main scan registration of K. – at the end of the scan line? | ▪ Defective PCU<br>▪ Defective laser optics housing unit<br>▪ Defective BICU<br>1. Reinstall or replace the PCU.<br>2. Replace the laser optics housing unit.<br>3. Replace the BICU. |

Troubleshooting Guide

| Test pattern check | Possible cause/Countermeasure |
|---|---|
| Others | ▪ Skew correction upper limit error<br>▪ Defective BICU<br>▪ Defective laser optics housing unit<br>1. Replace the BICU.<br>2. Replace the laser optics housing unit. |

After Executing SP2-111-001

- Result: "0" in SP2-194-007
- Result: No color registration errors in SP2-194-010, -011, -012

| Test pattern check | Possible cause/Countermeasure |
|---|---|
| The main scan registration of K is shifted. | ▪ Abnormal SP setting value of main scan: K<br>Adjust the value with SP2-101-001. |
| The main scan length of K is shifted. | ▪ Abnormal SP setting value of main scan length detection: K<br>Adjust the value with SP2-185-001. |

After Executing SP2-111-001

- Result: "0" in SP2-194-007
- Result: Color registration errors in SP2-194-010, -011, -012

| Test pattern check | Possible cause/Countermeasure |
|---|---|
| Low image density on the output | ▪ Low pattern density<br>Do the forced process control (SP3-011-001) or supply some toner (SP3-015-xxx). |
| The main scan registration is shifted, but only at the central area of the image on the output. | ▪ Defective ID sensor at center<br>▪ Deformed center area on the image transfer belt<br>▪ Defective BICU<br>1. Replace the ID sensor.<br>2. Replace the image transfer belt.<br>3. Replace the BICU. |
| The main scan registrations of M, C, Y are shifted. | ▪ Defective laser optics housing unit<br>▪ Defective ID sensor<br>▪ Defective BICU<br>▪ Incorrect SP value<br>1. Replace the laser optics housing unit.<br>2. Replace the ID sensor.<br>3. Replace the BICU.<br>4. Adjust the value with SP2-182-004 to -021. |
| The sub scan registrations of M, C, Y are shifted. | ▪ Defective image transfer belt<br>▪ Defective drive units<br>▪ Defective ID sensor<br>▪ Defective BICU<br>▪ Incorrect SP value<br>1. Replace the image transfer belt.<br>2. Replace the ID sensor.<br>3. Replace the drum motor.<br>4. Replace the BICU.<br>5. Adjust the value with SP2-182-022 to -039. |

| Test pattern check | Possible cause/Countermeasure |
|---|---|
| The skew of M, C, Y is different. | ▪ Defective PCU<br>▪ Defective laser optics housing unit<br>▪ Defective IOB<br>1. Reinstall or replace the PCU.<br>2. Replace the laser optics housing unit.<br>3. Replace the IOB. |
| The sub scan lines are shifted.<br>Shifted lines appear cyclically. | ▪ Defective PCU<br>▪ Defective drive unit<br>▪ Drum phase adjustment error<br>1. Do SP1-902-001 (Drum phase adjustment); see Replacement and Adjustment – Drive Unit – Gear Unit for details.<br>2. Reinstall or replace the PCU.<br>3. Check or replace the drive unit. |

# Appendix:
# Jam Detection

| APPENDIX 6 JAM DETECTION REVISION HISTORY | | |
|---|---|---|
| **Page** | **Date** | **Added/Updated/New** |
| | | None |

# 6. APPENDIX: JAM DETECTION

## 6.1 JAM DETECTION

### 6.1.1 PAPER JAM DISPLAY

SP7-507 shows the paper jam history.

```
CODE :011
SIZE    :05h
TOTAL:000034
DATE  :Fri Feb 15 11:44:50 2006
```

- **CODE**: Indicates the jam code.
- **SIZE**: Indicates the paper Size Code.
- **TOTAL**: Indicates the total counter (SP7-502-001).
- **DATE**: indicates the date when the jam occurred.

## 6.1.2 JAM CODES AND DISPLAY CODES

SP7-504 shows how many jams occurred at each location.

| Jam Code SP | Display | Description | LCD Display |
|---|---|---|---|
| 7504 3 | Tray 1: ON | Paper is not fed from tray 1. | A |
| 7504 4 | Tray 2: ON | Paper is not fed from tray 2. | A |
| 7504 5 | Tray 3: ON | Paper is not fed from tray 3 (LCT). | Y |
| 7504 6 | Tray 4: ON | Paper is not fed from tray 4. | Y |
| 7504 7 | LCT: ON | Paper is not fed from LCT. | U |
| 7504 8 | Bypass: ON | Paper is not fed from the by-pass tray. | A |
| 7504 9 | Duplex: ON | Paper is jammed at the duplex unit. | Z |
| 7504 10 | - | - | - |
| 7504 11 | Vertical Transport 1: ON | Vertical transport sensor 1 does not detect paper from tray 1. | A |
| 7504 12 | Vertical Transport 2: ON | Vertical transport sensor 2 does not detect paper from tray 2. | A |
| 7504 13 | Bank Transport 1 | Vertical transport sensor 1 or relay sensor does not detect paper from tray 3 (LCT). | Y |
| 7504 15 | - | - | - |
| 7504 16 | - | - | - |
| 7504 17 | Registration: ON | Registration sensor does not detect paper. | B |

| Jam Code SP | Display | Description | LCD Display |
|---|---|---|---|
| 7504 18 | Fusing Entrance: ON | Fusing entrance sensor does not detect paper. | B |
| 7504 19 | Fusing Exit: ON | Fusing exit sensor does not detect paper. | B |
| 7504 20 | Paper Exit: ON | Paper exit sensor does not detect paper. | C |
| 7504 21 | Relay Exit: ON | Tray exit sensor (bridge unit) does not detect paper. | D |
| 7504 22 | Relay Transport: ON | Relay sensor (bridge unit) does not detect paper. | D |
| 7504 23 | - | - | - |
| 7504 24 | Junction Gate Feed: ON | Junction gate jam sensor does not detect paper. | C |
| 7504 25 | Duplex Exit: ON | Duplex exit sensor does not detect paper. | Z |
| 7504 26 | Duplex Entrance: ON (In) | Duplex entrance sensor does not detect paper. | Z |
| 7504 27 | Duplex Entrance: ON (Out) | Duplex entrance sensor does not detect paper again after paper has passed this sensor. | Z |
| 7504 28 | - | - | - |
| 7504 51 | SEF Sensor 1 | Vertical transport sensor 1 does not turn off. | A |
| 7504 52 | SEF Sensor 2 | Vertical transport sensor 2 does not turn off. | A |

Jam Detection

| Jam Code SP | Display | Description | LCD Display |
|---|---|---|---|
| 7504 53 | Bank SEF Sensor 1 | Vertical transport sensor or relay sensor 1 does not turn off. | Y |
| 7504 54 | Bank SEF Sensor 2 | Vertical transport sensor 2 does not turn off. | Y |
| 7504 55 | - | - | - |
| 7504 56 | - | - | - |
| 7504 57 | Regist Sensor | Registration sensor does not turn off. | B |
| 7504 58 | LCT Sensor | LCT sensor does not turn off. | U |
| 7504 59 | | - | - |
| 7504 60 | Exit Sensor | Paper exit sensor does not turn off. | C |
| 7504 61 | Relay Exit Sensor | Tray exit sensor (bridge unit) does not turn off. | D |
| 7504 62 | Relay Sensor | Relay sensor (bridge unit) does not turn off. | D |
| 7504 63 | - | - | - |
| 7504 64 | Junction Gate Feed: OFF | Junction gate jam sensor does not turn off. | C |
| 7504 65 | Duplex Exit Sensor | Duplex exit sensor does not turn off. | Z |
| 7504 66 | Duplex Entrance: OFF (In) | Duplex entrance sensor does not turn off. | Z |
| 7504 67 | Duplex Entrance: OFF (Out) | Duplex entrance sensor does not turn off after paper has passed this sensor. | Z |

| Jam Code SP | Display | Description | LCD Display |
|---|---|---|---|
| 7504 68 | - | - | - |
| 7504 100 | Finisher Entrance (B408) | Paper does not reach to the entrance sensor or stay at the entrance sensor. | R1-R2 |
| 7504 101 | Finisher Shift Tray Exit (B408) | Paper does not reach to the lower tray exit sensor or stay at the lower tray exit sensor. | R1-R2 |
| 7504 102 | Finisher Staple (B408) | Paper does not reach to the staple tray entrance sensor or stay at the staple tray entrance sensor. | R3-R5 |
| 7504 103 | Finisher Exit (B408) | Lower tray exit sensor does not detect paper after the stack feed-out belt has fed paper.<br>Lower tray exit sensor still detects paper after the stack feed-out belt has returned to the home position. | R3-R5 |
| 7504 104 | - | - | - |
| 7504 105 | Finisher Tray Lift Motor (B408) | Stack height sensor does not detect paper after the lower tray has lifted up.<br>Stack height sensor still detects paper after the lower tray has lifted down. | R1-R2 |

Jam Detection

| Jam Code SP | Display | Description | LCD Display |
|---|---|---|---|
| 7504 106 | Finisher Jogger Motor (B408) | Jogger fence HP sensor does not turn off after the jogger fence has moved from its home position.<br>Jogger fence HP sensor does not turn on after the jogger fence has returned to its home position. | R3-R5 |
| 7504 107 | Finisher Shift Motor (B408) | Shift roller HP sensor does not turn off after the shift roller has moved from its home position.<br>Shift roller HP sensor does not turn on after the shift roller has returned to its home position. | R1-R2 |
| 7504 108 | Finisher Staple Motor (B408) | Stapler HP sensor does not turn off after the stapler has moved from its home position.<br>Stapler HP sensor does not turn on after the stapler has returned to its home position. | R3-R5 |
| 7504 109 | Finisher Exit Motor (B408) | Stack feed-out belt HP sensor does not turn off after the stack feed-out belt has moved from its home position.<br>Stack feed-out belt HP sensor does not turn on after the stack feed-out belt has returned to its home position. | R3-R5 |

| Jam Code SP | Display | Description | LCD Display |
|---|---|---|---|
| 7504 191 | Finisher Entrance: EUP (B804/B805) | Paper does not reach the finisher entrance sensor or stays at the finisher entrance sensor. | R1-R4 |
| 7504 192 | Finisher Proof Exit: EUP (B804/B805) | Paper does not reach the proof tray exit sensor or stays at the proof tray exit sensor. | R1-R4 |
| 7504 193 | Finisher Shift Tray Exit: EUP (B804/B805) | Paper does not reach the upper tray exit sensor or stays at the upper tray exit sensor. | R1-R4 |
| 7504 194 | Finisher Stapler Exit: EUP (B804/B805) | Stapling tray paper sensor does not turn on after the finisher entrance sensor has turned on.<br>Stapling tray paper sensor does not turn off after it has turned on. | R5-R7 |
| 7504 195 | Finisher Exit: EUP (B804/B805) | Upper tray exit sensor does not turn on while the stack feed-out belt is turned on.<br>Upper tray exit sensor does not turn off after the stack feed-out belt has returned to its home position. | R8-R12 |
| 7504 196 | - | - | - |
| 7504 197 | - | - | - |

Jam Detection

| Jam Code SP | Display | Description | LCD Display |
|---|---|---|---|
| 7504 198 | Finisher Folder: EUP (B804 only) | Fold bottom fence HP sensor does not turn on after the fold roller motor has stopped.<br>Fold unit exit sensor does not turn on after the fold rollers have stopped.<br>Fold unit exit sensor does not turn off after the fold rollers have stopped. | R8-R12 |
| 7504 199 | Finisher Tray Motor: EUP (B804/B805) | Upper tray limit sensor does not turn on after the upper tray has lifted up.<br>Upper tray limit sensor does not turn off after the upper tray has moved down. | R1-R4 |
| 7504 200 | Finisher Jogger Motor: EUP (B804/B805) | Jogger fence HP sensor does not turn on/off after the jogger motor has turned on.<br>Stack feed out belt HP sensor does not turn on/off after the feed out belt motor has turned on. | R8-R12 |
| 7504 201 | Finisher Shift Motor: EUP (B804/B805) | Shift roller HP sensor does not turn on/off after the shift roller motor has turned on.<br>Exit guide plate HP sensor does not turn on/off after the exit guide plate motor has turned on.<br>Stacking roller HP sensor does not turn on/off after the stacking sponge roller motor has turned on. | R1-R4 |

| Jam Code SP | Display | Description | LCD Display |
|---|---|---|---|
| 7504 202 | Finisher Staple Moving Motor: EUP (B804/B805) | Corner stapler HP sensor does not turn on/off after the corner stapler movement motor has turned on.<br>Stapler rotation HP sensor does not turn on/off after the corner stapler rotation motor has turned on. | R8-R12 |
| 7504 203 | Finisher Staple Motor: EUP (B804/B805) | Corner stapler does not finish stapling after a specified time.<br>Booklet stapler does not finish stapling after a specified time. | R8-R12 |
| 7504 204 | Finisher Folder Motor: EUP (B804 only) | Fold plate HP sensor does not turn on/off after the fold plate motor has turned on.<br>Clamp roller HP sensor does not turn on/off after the clamp roller retraction motor has turned on.<br>Fold bottom fence HP sensor does not turn on/off after the fold unit bottom fence lift motor has turned on.<br>Stack junction gate HP sensor does not turn on/off after the stack junction gate motor has turned on. | R8-R12 |
| 7504 205 | - | - | - |

Jam Detection

| Jam Code SP | Display | Description | LCD Display |
|---|---|---|---|
| 7504 206 | Finisher Punch Motor: EUP (B804/B805) | Punch encoder sensor does not turn on/off after the punch drive motor has turned on.<br>Punch movement HP sensor does not turn on/off after the punch movement motor has turned on.<br>Paper position slide HP sensor does not turn on/off after the paper position sensor slide motor has turned on. | R1-R4 |

### *Paper Size Code*

| Size Code | Paper Size | Size Code | Paper Size |
|---|---|---|---|
| 05 | A4 LEF | 141 | B4 SEF |
| 06 | A5 LEF | 142 | B5 SEF |
| 14 | B5 LEF | 160 | DLT SEF |
| 38 | LT LEF | 164 | LG SEF |
| 44 | HLT LEF | 166 | LT SEF |
| 132 | A3 SEF | 172 | HLT SEF |
| 133 | A4 SEF | 255 | Others |
| 134 | A5 SEF | - | - |

### *Sensor Locations*

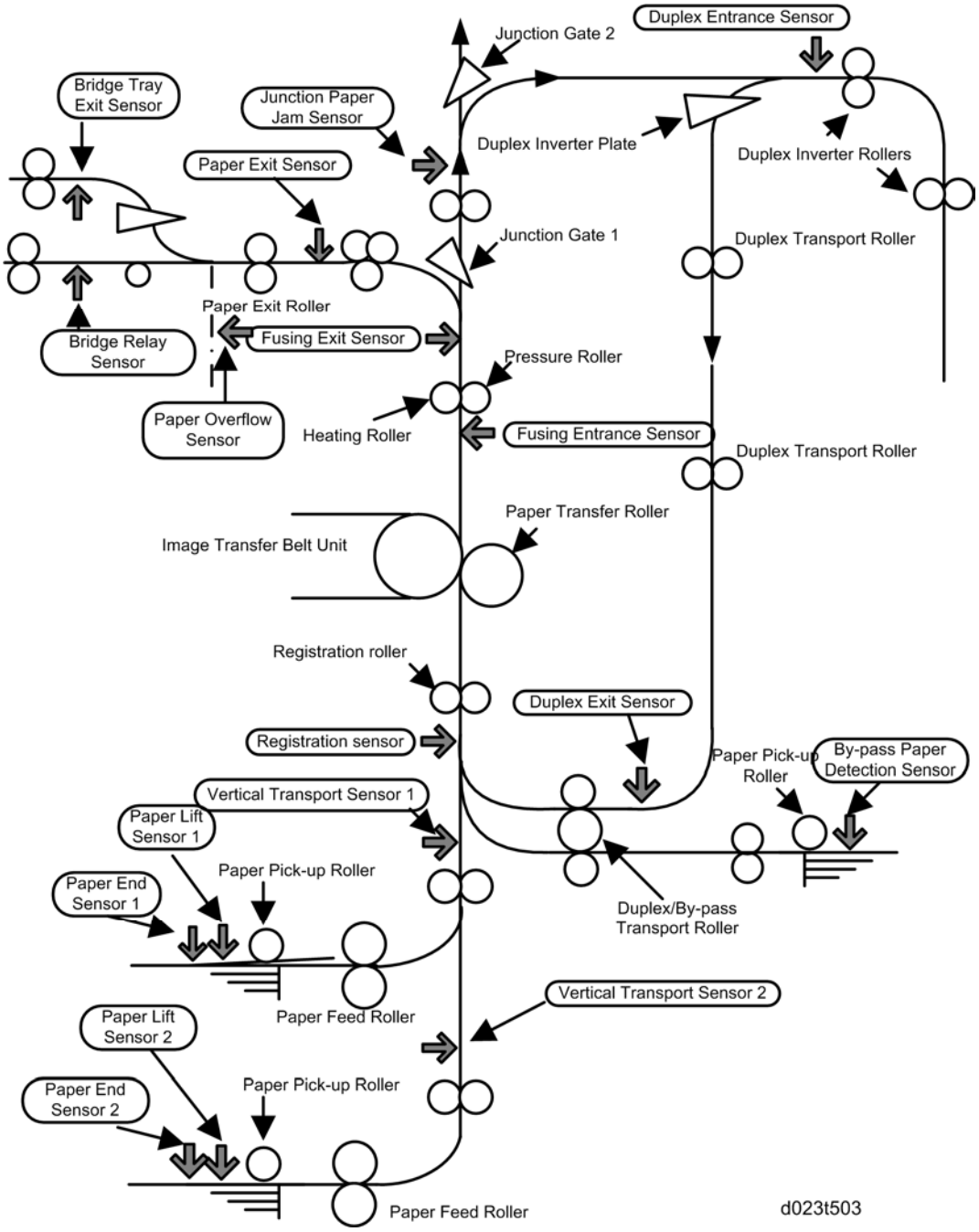

# Appendix:
# Electrical Component Defects

| APPENDIX 7 ELECTRICAL COMPONENT DEFECTS REVISION HISTORY | | |
|---|---|---|
| **Page** | **Date** | **Added/Updated/New** |
| | | None |

# 7. APPENDIX: ELECTRICAL COMPONENT DEFECTS

## 7.1 ELECTRICAL COMPONENT DEFECTS

### 7.1.1 SENSORS

Note

- The CN numbers in the following table are the connector numbers on the IOB.

| No. | Sensor Name/ Sensor Board Name | Active | CN | Condition | Symptom |
|---|---|---|---|---|---|
| SW1 | Right Door Open Switch | L | CN204/1 | Open | "Open Cover" is displayed. |
| | | | | Shorted | "Open cover" cannot be detected. |
| S10 | Duplex Door | L | CN232/B9 | Open | "Open Cover" is displayed. |
| | | | | Shorted | "Open cover" cannot be detected. |

Electrical Component Defects

| No. | Sensor Name/ Sensor Board Name | Active | CN | Condition | Symptom |
|---|---|---|---|---|---|
| S1 | ID Sensor: M | A | CN211/ 7, 11 | Open/ Shorted | SC400 |
| | ID Sensor: C | A | CN211/ 8, 12 | Open/ Shorted | |
| | ID Sensor: Y | A | CN211/ 9, 13 | Open/ Shorted | |
| | ID Sensor: Front | A | CN211/1 | Open/ Shorted | SC258 |
| | ID Sensor: Center and K | A | CN211/2 | Open/ Shorted | SC400 / SC258 |
| | ID Sensor: Rear | A | CN211/3 | Open/ Shorted | SC258 |
| S13 | Registration Sensor | L | CN224/A2 | Open | Jam A (Jam8, 17) |
| | | | | Shorted | Jam A, B (Jam1) |
| S29 | Drum Gear Position Sensor-K | H | CN222/A2 | Open/ Shorted | SC380/SC396 |
| S30 | Drum Gear Position Sensor-M | H | CN222/ A5 | Open/ Shorted | SC380/SC397 |
| S31 | Drum Gear Position Sensor-C | H | CN222/ A8 | Open/ Shorted | SC380/SC398 |
| S32 | Drum Gear Position Sensor-Y | H | CN222/ A11 | Open/ Shorted | SC380/SC399 |

| No. | Sensor Name/ Sensor Board Name | Active | CN | Condition | Symptom |
|---|---|---|---|---|---|
| S25<br>S26<br>S27<br>S28 | Toner End Sensor - K<br>Toner End Sensor - Y<br>Toner End Sensor - C<br>Toner End Sensor - M | L | CN207/A1<br>CN207/B9<br>CN207/ B12<br>CN207/ B15 | Open | Toner end cannot be detected. |
| | | | | Shorted | Toner end is detected when there is enough toner. |
| - | Image Transfer Belt Rotation Sensor | H/L | CN208/11 | Open/ Shorted | SC443 |
| S20 | Vertical Transport Sensor 1 | L | CN230/A7 | Open | Jam A (Jam3, 11) |
| | | | | Shorted | Jam A, B (Jam1) |
| S21<br>S24 | Paper End Sensor 1, 2 | L | CN230/ A10, B10 | Open | Paper end is not detected when there is no paper in the paper tray. |
| | | | | Shorted | Paper end is detected when there is paper in the paper tray. |
| S22<br>S25 | Paper Lift Sensor 1, 2 | H | CN230/ A13, B13 | Open/ Shorted | SC501, SC502 |
| S23 | Vertical Transport Sensor 2 | L | CN230/B7 | Open | Jam A (Jam4, 12) |
| | | | | Shorted | Jam A, B (Jam1) |
| S15<br>S16 | Tray 1 Paper Height Sensor 1, 2 | L | CN224/ B2, B5 | Open/ Shorted | Remaining paper volume on the LCD is wrong. |

Electrical Component Defects

| No. | Sensor Name/ Sensor Board Name | Active | CN | Condition | Symptom |
|---|---|---|---|---|---|
| S17<br>S18 | Tray 2 Paper Height Sensor 1, 2 | L | CN224/<br>B10, B13 | Open/<br>Shorted | Remaining paper volume on the LCD is wrong. |
| SW4 | Tray 1 Set Switch | L | CN224/A9 | Open | Tray 1 is not detected when tray 1 is set. |
| | | | | Shorted | Tray 1 is detected when tray 1 is not set. |
| S12 | By-pass Paper Size Sensor | L | CN232/<br>B16, B17,<br>B19, B20 | Open/<br>Shorted | Paper size error |
| SW2 | By-pass Paper Detection Sensor | L | CN232/<br>A15 | Open | Paper on the by-pass tray is not detected when paper is set. |
| | | | | Shorted | Paper on the by-pass tray is detected when paper is not set. |
| S11 | By-pass Paper Length Sensor | L | CN232/<br>B12 | Open | Paper size error |
| | | | | Shorted | |
| S9 | Fusing Entrance Sensor | L | CN232/B6 | Open | Jam C (Jam 18) |
| | | | | Shorted | Jam C (Jam 1) |
| S7 | Duplex Entrance Sensor | L | CN232/A8 | Open | Jam Z (Jam 26/27) |
| | | | | Shorted | Jam Z (Jam 1) |

| No. | Sensor Name/ Sensor Board Name | Active | CN | Condition | Symptom |
|---|---|---|---|---|---|
| S8 | Duplex Exit Sensor | L | CN232/ A11 | Open | Jam Z (Jam 25) |
| | | | | Shorted | Jam Z (Jam 1) |
| S33 | TD Sensor - K | A | CN227/A7 | Open/ Shorted | SC372 |
| S34 | TD Sensor - M | A | CN227/ A15 | Open/ Shorted | SC373 |
| S35 | TD Sensor - C | A | CN227/B7 | Open/ Shorted | SC374 |
| S36 | TD Sensor - Y | A | CN227/ B15 | Open/ Shorted | SC375 |
| S4 | Fusing Exit Sensor | L | CN204/12 | Open | Jam C (Jam 19) |
| | | | | Shorted | Jam C (Jam 1) |
| S14 | Waste Toner Sensor | H | CN224/A5 | Open | Waste toner near full indicated when it is not near full. |
| | | | | Shorted | Waste toner near full cannot be detected when the waste toner bottle is nearly full. |

Electrical Component Defects

| No. | Sensor Name/ Sensor Board Name | Active | CN | Condition | Symptom |
|---|---|---|---|---|---|
| SW4 | Waste Toner Bottle Set Switch | L | CN224/A7 | Open | Waste toner bottle is not detected when the waste toner bottle is set. |
| | | | | Shorted | Waste toner bottle is detected when the waste toner bottle is not set. |
| SW6 | Tray 2 Paper Size Switch | L | CN224/ A11, A12, A13, A15 | Open/ Shorted | Paper size error |
| S6 | Temperature/ Humidity Sensor | A | CN231/ 25, 27 | Open/ Shorted | SC498<br>Printed image has some problems such as rough image, dirty background, weak image or poor fusing. |
| S47 | Thermopile | A | CN209/16 | Open/ Shorted | SC541 |
| TH2 | Thermistor<br>- Heating Roller | A | CN212/22 | Open/ Shorted | SC551 |
| TH1 | Thermistor<br>- Pressure Roller | A | CN212/18 | Open/ Shorted | SC561 |
| S3 | Paper Exit Sensor | L | CN204/9 | Open | Jam C (Jam 20) |
| | | | | Shorted | Jam C (Jam 1) |

| No. | Sensor Name/ Sensor Board Name | Active | CN | Condition | Symptom |
|---|---|---|---|---|---|
| S5 | Paper Overflow Sensor | L | CN204/15 | Open | Paper overflow message is not displayed when the paper overflow condition still remains. |
| | | | | Shorted | Paper overflow message is displayed when the paper overflow condition does not remain. |
| S41 | Original Width Sensor 1 | A | CN313/14 SIO | Open/ Shorted | Original paper size cannot be detected. |
| Sxx | Original Width Sensor 2 | A | CN313/11 SIO | Open/ Shorted | Original paper size cannot be detected. |
| Sxx | Original Length Sensor 1 | A | CN313/8 SIO | Open/ Shorted | Original paper size cannot be detected. |
| Sxx | Original Length Sensor 2 | A | CN313/5 SIO | Open/ Shorted | Original paper size cannot be detected. |
| Sxx | Original Length Sensor 3 | A | CN313/2 SIO | Open/ Shorted | Original paper size cannot be detected. |
| S39 | Scanner HP Sensor | H | CN318/2 SIO | Open | SC120 |
| | | | | Shorted | SC121 |

Electrical Component Defects

| No. | Sensor Name/ Sensor Board Name | Active | CN | Condition | Symptom |
|---|---|---|---|---|---|
| S40 | Platen Cover Sensor | L | CN318/5 SIO | Open/ Shorted | Platen cover open cannot be detected. |
| - | Paper Transfer Contact Sensor | L | CN208/7 | Open/ Shorted | SC452 |
| - | Image Transfer Belt Contact Sensor | L | CN208/2 | Open/ Shorted | SC442 |
| S2 | Junction Paper Jam Sensor | L | CN204/6 | Open/ Shorted | Jam C (Jam 24/64) |

## 7.1.2 BLOWN FUSE CONDITIONS

### *Power Supply Unit*

| Fuse | Rating | | Symptom when turning on the main switch |
|---|---|---|---|
| | 115V | 220V - 240V | |
| FU1 | 15A/125V | 8A/250V | No response. (5V power to the PSU is not supplied.) |
| FU2 | 10A/125V | 6.3A/250V | No response. (5V power to the BICU and controller is not supplied.) |
| FU3 | 2A/250V | 1A/250V | 5V power to the scanner heater and tray heater is not supplied. |
| FU4 | 1A/250V | 1A/250V | 5V power to the SIO and heater is not supplied. |
| FU5 | 5A/250V | 5A/250V | 5V power to the IOB not supplied. |
| FU6 | 2A/250V | 2A/125V | 5VS power to the BICU not supplied. |
| FU7 | 10A/125V | 10A/125V | 24VS power to the IOB not supplied. |
| FU8 | 10A/125V | 10A/125V | 24VS power to the IOB not supplied. |
| FU9 | 6.3A/125V | 6.3A/125V | 24V power to the IOB not supplied. |
| FU10 | 6.3A/125V | 6.3A/125V | 24V power to the SIO not supplied. |
| FU11 | 6.3A/125V | 6.3A/125V | 24V power to the BICU and MB not supplied. |
| FU12 | 6.3A/125V | 6.3A/125V | 24V power to the PFU or LCT not supplied. |
| FU13 | 6.3A/125V | 6.3A/125V | 24V power to the finisher not supplied. |
| FU14 | 5A/250V | 5A/250V | 5V power to the BICU not supplied. |

### *IH Inverter*

| Fuse | Rating | | Symptom when turning on the main switch |
|---|---|---|---|
| | 115V | 220V - 240V | |
| FU1 | 15A/125V | 8A/250V | 15V power to the IH coil unit is not supplied.<br>SC689 occurs. |
| FU2 | 115°C | | No response |
| FU3 | 115°C | | No response |
| FU4 | 1A/250V | | 15V power to the IH coil unit is not supplied.<br>SC689 occurs. |

**⚠CAUTION**

- For continued protection against risk of fire, replace only with same type and rating of fuse.

# Appendix:
# SP Mode Tables

| APPENDIX 8 SP MODE TABLES REVISION HISTORY | | |
|---|---|---|
| **Page** | **Date** | **Added/Updated/New** |
| 229 | 10/28/2009 | SP5193 updated. |
| 237 ~ 238 | 04/16/2009 | System Service Mode |
| 293 | 05/13/2009 | SP5-887 |
| 294 | 10/28/2009 | SP5895 added. |
| 295 | 09/17/2009 | SP5985 |
| 463 ~ 464 | 02/19/2009 | Scanner SP Modes |

# 8. APPENDIX: SP MODE TABLES

## 8.1 SYSTEM SERVICE MODE

### 8.1.1 SERVICE MODE TABLE

***SP1-XXX (Feed)***

| | | | |
|---|---|---|---|
| **1001** | **[Leading Edge Registration]** Leading Edge Registration Adjustment (Tray Location, Paper Type, Color Mode), Paper Type -> Plain, Thick 1or Thick 2 | | |
| | Adjusts the leading edge registration by changing the registration motor operation timing for each mode. | | |
| 002 | Tray: Plain | *ENG | [–9 to 9 / **0.0** / 0.1 mm/step] |
| 003 | Tray: Middle Thick | *ENG | |
| 004 | Tray: Thick 1 | *ENG | |
| 005 | Tray: Thick 2 | *ENG | |
| 007 | By-pass: Plain | *ENG | |
| 008 | By-pass: Middle Thick | *ENG | |
| 009 | By-pass: Thick 1 | *ENG | |
| 010 | By-pass: Thick 2 | *ENG | |
| 011 | By-pass: Thick 3 | *ENG | |
| 013 | Duplex: Plain | *ENG | |
| 014 | Duplex: Middle Thick | *ENG | |
| 015 | Duplex: Thick 1 | *ENG | |

| | | | |
|---|---|---|---|
| 016 | Tray: Thick 3 | *ENG | |
| 017 | Tray: Plain:1200 | *ENG | |
| 018 | Tray: Middle Thick:1200 | *ENG | |
| 019 | Tray: Thick 1:1200 | *ENG | |
| 020 | By-pass: Plain:1200 | *ENG | |
| 021 | By-pass: Middle Thick:1200 | *ENG | |
| 022 | By-pass: Thick 1:1200 | *ENG | |
| 023 | Duplex: Plain:1200 | *ENG | |
| 024 | Duplex: Middle Thick:1200 | *ENG | |
| 025 | Duplex: Thick 1:1200 | *ENG | |

| | | | |
|---|---|---|---|
| **1002** | **[Side to Side Reg.]** Side-to-Side Registration Adjustment | | |
| | Adjusts the side-to-side registration by changing the laser main scan start position for each mode. | | |
| 001 | By-pass Table | *ENG | [–4 to 4 / **0.0** / 0.1 mm/step] |
| 002 | Paper Tray 1 | *ENG | |
| 003 | Paper Tray 2 | *ENG | |
| 004 | Paper Tray 3 | *ENG | |
| 005 | Paper Tray 4 | *ENG | |
| 006 | Duplex | *ENG | |
| 007 | Paper Tray 5 | *ENG | |
| 008 | Large Capacity Tray | *ENG | |

| | | | |
|---|---|---|---|
| **1003** | **[Paper Buckle]** Paper Buckle Adjustment<br>(Tray Location, Paper Type), Paper Type: N: Normal, TH: Thick | | |
| | Adjusts the amount of paper buckle at the registration roller by changing the paper feed timing. | | |
| 002 | Paper Tray1: Plain | *ENG | [–9 to 5 / **-2** / 1 mm/step] |
| 003 | Tray1: Middle Thick | *ENG | [–9 to 5 / **-1** / 1 mm/step] |
| 004 | Paper Tray1: Thick1 | *ENG | [–9 to 5 / **-2** / 1 mm/step] |
| 007 | Paper Tray2/3/4/5/LCT: Plain | *ENG | |
| 008 | Tray 2/3/4/5/LCT: Middle Thick | *ENG | [–9 to 5 / **-1** / 1 mm/step] |
| 009 | Paper Tray2/3/4/5/LCT: Thick 1 | *ENG | [–9 to 5 / **-2** / 1 mm/step] |
| 012 | By-pass: Plain | *ENG | [–9 to 5 / **0** / 1 mm/step] |
| 013 | By-pass: Middle Thick | *ENG | |
| 014 | By-pass: Thick 1 | *ENG | [–9 to 5 / **-2** / 1 mm/step] |
| 018 | Duplex: Plain | *ENG | [–9 to 5 / **0** / 1 mm/step] |
| 019 | Duplex: Middle Thick | *ENG | |
| 020 | Duplex: Thick 1 | *ENG | [–9 to 5 / **-2** / 1 mm/step] |
| 021 | Paper Tray1: Plain: 1200 | *ENG | [–9 to 5 / **0** / 1 mm/step] |
| 022 | Tray1: Middle Thick: 1200 | *ENG | |
| 023 | Tray 2/3/4/5LCT: Plain: 1200 | *ENG | |
| 024 | Tray 2/3/4/5LCT: Mid: 1200 | *ENG | |
| 025 | By-pass: Plain: 1200 | *ENG | |
| 026 | By-pass: Middle Thick: 1200 | *ENG | |

| | | | |
|---|---|---|---|
| 027 | Paper Tray1: Thick1: 1200 | *ENG | [–9 to 5 / **-2** / 1 mm/step] |
| 028 | Paper Tray2/3/4/5/LCT: Thick 1:1200 | *ENG | |
| 029 | By-pass: Thick 1: 1200 | *ENG | |
| 030 | Duplex: Plain: 1200 | *ENG | [–9 to 5 / **0** / 1 mm/step] |
| 031 | Duplex: Middle Thick: 1200 | *ENG | |
| 032 | Duplex: Thick 1: 1200 | *ENG | [–9 to 5 / **-2** / 1 mm/step] |

| **1007** | **[By-Pass Size Detection]** By-Pass Size Detection Display | | |
|---|---|---|---|
| 001 | LG | *ENG | [0 or 1 / **0** / 1 ]<br>0: Disable, 1: Enable |
| | Enables or disables the automatic paper size detection function of the by-pass tray.<br>This SP determines what paper size the machine detects if the detected size is less than 8.5”.<br>0: OFF (Letter/SEF), 1: ON (Legal/SEF) | | |

| **1101** | **[Flicker Control]** | | |
|---|---|---|---|
| 001 | Flicker Control | *ENG | [0 or 1 / **0** / 1 /step] |
| | - | | |

| **1103** | **[Fusing Idling]** Fusing Idling Adjustment | | |
|---|---|---|---|
| 011 | Idling Start Temp. | *ENG | [0 to 75 / **75** / 1 deg/step] |
| 012 | Forced Idling Stop | *ENG | [0 to 1 / **0** / 1 /step] |
| 013 | Forced Idling Stop Temp. | *ENG | [100 to 180 / **100** / 1 deg/step] |
| 014 | Minimum Idling Time | *ENG | [0 to 10 / **0** / 1 sec/step] |
| 016 | Extra Idling Time (L) | *ENG | Specifies how long the extra idling operation is executed for each environment.<br>[0 to 60 / **0** / 1 sec/step]<br>Each environment is determined with SP1112-001 and 002. |
| 017 | Extra Idling Time (H) | *ENG | [0 to 60 / **0** / 1 sec/step] |
| 018 | Extra Idling Time (M) | *ENG | |
| 019 | Pressure TempThreshold | *ENG | [0 to 160 / **100** / 1 deg/step] |
| 020 | Control Switch Temp | *ENG | [0 to 25 / **25** / 1 deg/step] |

| **1104** | **[Idling Before Job]** | | |
|---|---|---|---|
| 001 | Environment Threshold | *ENG | [0 to 2 / **2** / 1 /step] |
| 002 | Pressure Temp Threshold | *ENG | [0 to 160 / **150** / 1 /step] |
| 003 | Idling Time: BW | *ENG | [0 to 10 / **0** / 1 sec/step] |
| 004 | Idling Time: FC | *ENG | |
| 005 | Idling Time: MiddleThick: BW | *ENG | [0 to 10 / **2** / 1 sec/step] |
| 006 | Idling Time: MiddleThick: FC | *ENG | |
| 007 | Pressure Temp: Paper Feed | *ENG | [0 to 130 / **50**/ 1 deg/step] |

| | | | |
|---|---|---|---|
| 008 | Pressure Temp: Paper Feed: MT: BW | *ENG | |
| 009 | Pressure Temp: Paper Feed: MT: FC | *ENG | |
| 010 | Fusing Upper Limit Tem | *ENG | [0 to 100 / **15**/ 1 deg/step] |
| 011 | Offset: Feed Start | *ENG | [0 to 100 / **25**/ 1 deg/step] |
| 012 | Offset: Feed Start: Middle Thick | *ENG | [0 to 100 / **10**/ 1 deg/step] |
| 031 | Offset: Feed Start: F | *ENG | |
| 032 | Feed: Glossy: Ready : U limit | *ENG | |
| 033 | Offset: Feed Start: Glossy | *ENG | |
| 040 | 1bin: Paper Feed: Pressure Temp | *ENG | [0 to 100 / **85** / 1 deg/step] |
| 041 | F :1bin: Paper Feed: Pressure Temp | *ENG | [0 to 100 / **75** / 1 deg/step] |

| | | | |
|---|---|---|---|
| **1105** | **[Fusing Temperature]** Fusing Temperature Adjustment | | |
| | (Printing Mode, Roller Type, [Color], Simplex/Duplex)<br>Roller Type –> Center and Ends: Heating roller, Pressure –> Pressure roller<br>Paper Type -> Plain, Thin, Thick, OHP, Middle Thick, Special | | |
| 001 | Fusing Ready Temp. | *ENG | [145 to 155 / **145** / 1 deg/step] |
| | Specifies the heating roller target temperature for the ready condition. | | |
| 002 | Fusing Ready: Offset | *ENG | [15 to 30 / **15** / 1 deg/step] |
| | Sets the heating roller offset temperature for the printing ready condition.<br>Ready temperature = (Target temperature specified in SP1-105-1) –<br>Temperature specified in this SP mode | | |

| | | | |
|---|---|---|---|
| 007 | Pressure Ready Temp | *ENG | [0 to 150 / **20** / 1 deg/step] |
| | Sets the heating roller offset temperature at the end of the heating roller. This value is one of the thresholds to determine if the machine is at the heating roller target temperature during warm-up. | | |
| 010 | Stand-By: Center | * ENG | [140 to 170 / **155** / 1 deg/step] |
| 011 | Stand-By: End | * ENG | |
| 012 | Stand-By: Pressure | * ENG | [105 to 135 / **120** / 1 deg/step] |
| | Sets the pressure roller offset temperature. This value is one of the thresholds to determine if the machine is at the heating roller target temperature during warm-up. | | |
| 013 | Panel Off Mode: Center | * ENG | [100 to 150 / **130** / 1 deg /step] |
| 014 | Panel Off Mode: Ends | * ENG | [100 to 150 / **130** / 1 deg /step] |
| 015 | Panel Off Mode: Pressure | *ENG | [105 to 135 / **120** / 1 deg /step] |
| 016 | Low Power: Center | *ENG | [30 to 100 / **40** / 1 deg /step] |
| 017 | Low Power: Ends | *ENG | |
| 018 | Low Power: Pressure | *ENG | [30 to 135 / **80** / 1 deg /step] |
| 019 | Off Mode: Center | *ENG | [0 to 180 / **0** / 1 deg /step] |
| 020 | Off Mode: Ends | *ENG | |
| 021 | Off Mode: Pressure | *ENG | [0 to 170 / **0** / 1 deg /step] |

| | | | |
|---|---|---|---|
| 030 | Plain: FC: Simplex | *ENG | [130 to 175 / **150** / 1 deg /step] |
| 031 | Plain: FC: Simplex: Ends | *ENG | |
| 032 | Plain: FC: Duplex | *ENG | |
| 033 | Plain: FC: Duplex: Ends | *ENG | |
| 034 | Plain: BW: Simplex | *ENG | |
| 035 | Plain: BW: Simplex: Ends | *ENG | |
| 036 | Plain: BW: Duplex | *ENG | |
| 037 | Plain: BW: Duplex: Ends | *ENG | |
| 038 | Thin: FC: Simplex | *ENG | [130 to 175 / **145** / 1 deg/step] |
| 039 | Thin: FC: Simplex: Ends | *ENG | |
| 042 | Thin: BW: Simplex | *ENG | |
| 043 | Thin: BW: Simplex: Ends | *ENG | |
| 044 | Thin: BW: Duplex | *ENG | |
| 046 | Thick 1: FC: Simplex | *ENG | [135 to 180 / **150** / 1 deg /step] |
| 047 | Thick 1: FC: Simplex: Ends | *ENG | |
| 048 | Thick 1: FC: Duplex | *ENG | |
| 047 | Thick 1: FC: Simplex: Ends | *ENG | |
| 050 | Thick 1: BW: Simplex | *ENG | |
| 051 | Thick 1: BW: Simplex: Ends | *ENG | |
| 052 | Thick 1: BW: Duplex | *ENG | |
| 054 | Thick 2: FC: Simplex | *ENG | [135 to 180 / **160** / 1 deg /step] |
| 055 | Thick 2: BW: Simplex | *ENG | |

| | | | |
|---|---|---|---|
| 056 | OHP: FC: Simplex | *ENG | [130 to 175 / **150** / 1 deg /step] |
| 057 | OHP: BW: Simplex | *ENG | |
| 058 | Special 1: FC: Simplex | *ENG | [130 to 175 / **150** / 1 deg/step] |
| 059 | Special 1: FC: Simplex: Ends | *ENG | |
| 060 | Special 1: FC: Duplex | *ENG | |
| 061 | Special 1: FC: Duplex: Ends | *ENG | |
| 062 | Special 1: BW: Simplex | *ENG | |
| 063 | Special 1: BW: Simplex: Ends | *ENG | |
| 064 | Special 1: BW: Duplex | *ENG | |
| 065 | Special 1: BW: Duplex: Ends | *ENG | |
| 066 | Special 2: FC: Simplex | *ENG | |
| 067 | Special 2: FC: Simplex: Ends | *ENG | |
| 068 | Special 2: FC: Duplex | *ENG | |
| 069 | Special 2: FC: Duplex: Ends | *ENG | |
| 070 | Special 2: BW: Simplex | *ENG | |
| 071 | Special 2: BW: Simplex: Ends | *ENG | |
| 072 | Special 2: BW: Duplex | *ENG | |
| 073 | Special 2: BW: Duplex: Ends | *ENG | |
| 074 | Special 3: FC: Simplex | *ENG | |
| 075 | Special 3: FC: Simplex: Ends | *ENG | |
| 076 | Special 3: FC: Duplex | *ENG | |
| 077 | Special 3: FC: Duplex: Ends | *ENG | |

| | | | |
|---|---|---|---|
| 078 | Special 3: BW: Simplex | *ENG | |
| 079 | Special 3: BW: Simplex: Ends | *ENG | |
| 080 | Special 3: BW: Duplex | *ENG | |
| 081 | Special 3: BW: Duplex: Ends | *ENG | |
| 082 | Target Temp. After Ready | *ENG | [140 to 165 / **155** / 1 deg/step] |
| | Specifies the target temperature for the maintain mode after the machine has reached the target temperature in warm-up mode. | | |
| 083 | Recovery Target Temp. | *ENG | [140 to 160 / **150** / 1 deg /step] |
| | Specifies the target temperature for the print mode without printing/copying job after the machine's recovery. | | |
| 087 | Thick 2: FC: Simplex: Ends | *ENG | [130 to 180 / **160** / 1 deg/step] |
| 088 | Thick 2: BW: Simplex: Ends | *ENG | |
| 089 | Thick 3: FC: Simplex | *ENG | [135 to 180 / **165** / 1 deg/step] |
| 090 | Thick 3: FC: Simplex: Ends | *ENG | |
| 091 | Thick 3: BW: Simplex | *ENG | |
| 092 | Thick 3: BW: Simplex: Ends | *ENG | |
| 110 | Middle Thick: FC: Duplex | *ENG | [130 to 175 / **160** / 1 deg/step] |
| 111 | Middle Thick: BW: Simplex | *ENG | |
| 112 | Middle Thick: BW: Duplex | *ENG | |
| 113 | Middle Thick: FC: Simplex: Ends | *ENG | |
| 114 | Middle Thick: FC: Duplex: Ends | *ENG | |
| 115 | Middle Thick: BW: Simplex: Ends | *ENG | |

| | | | |
|---|---|---|---|
| 116 | Middle Thick: BW: Duplex: Ends | *ENG | |
| 120 | Plain2: FC: Simplex | *ENG | [130 to 175 / **155** / 1 deg/step] |
| 122 | Plain2: FC: Duplex | *ENG | |
| 124 | Plain2: BW: Simplex | *ENG | |
| 125 | Plain2: BW: Simplex: Ends | *ENG | |
| 126 | Plain2: BW: Duplex | *ENG | |
| 127 | Plain2: BW: Duplex: Ends | *ENG | |
| 128 | F: Plain1: FC : Simplex | *ENG | [120 to 160 / **135** / 1 deg/step] |
| 129 | F: Plain1: FC : Simplex: Ends | *ENG | |
| 130 | F: Plain1: BW : Simplex | *ENG | |
| 131 | F: Plain1: BW : Simplex: Ends | *ENG | |
| 132 | F: Plain2: FC: Simplex | *ENG | [120 to 160 / **140** / 1 deg /step] |
| 133 | F: Plain2: FC: Simplex: Ends | *ENG | |
| 134 | F: Plain2: BW: Simplex | *ENG | |
| 135 | F: Plain2: BW: Simplex: Ends | *ENG | |
| 136 | F: Middle Thick: FC: Simplex | *ENG | [120 to 160 / **145** / 1 deg /step] |
| 137 | F: Middle Thick: FC: Simplex: Ends | *ENG | |
| 138 | F: Middle Thick: BW: Simplex | *ENG | |
| 139 | F: Middle Thick: BW: Simplex: Ends | *ENG | |

| | | | |
|---|---|---|---|
| 142 | Glossy: Plain1 | *ENG | [120 to 160 / **135** / 1 deg/step] |
| 143 | Glossy: Plain1: Ends | *ENG | |
| 144 | Glossy: Plain2 | *ENG | [120 to 160 / **140** / 1 deg/step] |
| 145 | Glossy: Plain2: Ends | *ENG | |
| 146 | Glossy: Middle Thick | *ENG | [120 to 160 / **145** / 1 deg/step] |
| 147 | Glossy: Middle Thick: Ends | *ENG | |
| 148 | 1bin: Plain | *ENG | [100 to 160 / **140** / 1 deg/step] |
| 149 | 1bin: Plain: Ends | *ENG | |
| 150 | F: 1bin: Plain | *ENG | [100 to 160 / **125** / 1 deg/step] |
| 151 | F: 1bin: Plain: Ends | *ENG | |

| | | | |
|---|---|---|---|
| **1106** | **[Fusing Temperature Display]** Fusing Temperature Display (Heating or Pressure) | | |
| | Displays the current temperature of the heating and pressure rollers. | | |
| 001 | Fusing: Center | - | [–20 to 250 / 0 / 1 deg/step]<br>The heating roller has two lamps. One heats the center of the heating roller and the other heats both ends of the heating roller. |
| 002 | Fusing: Ends | - | [–10 to 250 / 0 / 1 deg/step]<br>The heating roller has two lamps. One heat s the center of the heating roller and the other heats both ends of the heating roller. |
| 003 | Pressure | - | |

| | | | |
|---|---|---|---|
| **1108** | **[Forced Ready Setting]** | | |
| | Japan use only | | |
| 007 | Time | *ENG | [22 to 60 / **22** / 0.1 sec/step] |

| | | | |
|---|---|---|---|
| **1109** | **[Fusing Nip Band Check]** | | |
| 001 | Execute | - | [0 or 1 / **0** / 1]<br>Executes the nip band measurement between fusing belt and pressure roller. If the nip band width is not 8 mm, and fusing is not good, replace the pressure roller or install a new fusing unit. |
| 002 | Pre-Idling Time | *ENG | [0 to 120 / **0** / 1 sec/step] |
| | Specifies the fusing rotation time before executing SP1109-001. | | |
| 003 | Stop Time | * ENG | [5 to 30 / **10** / 1 sec/step] |
| | Specifies the time for measuring the nip. | | |

| | | | |
|---|---|---|---|
| **1112** | **[Environmental Correction: Fusing]** | | |
| 001 | Temp.: Threshold: Low | *ENG | [10 to 23 / **17** / 1 deg/step] |
| | Specifies the threshold temperature for low temperature condition. | | |
| 002 | Temp.: Threshold: High | *ENG | [24 to 40 / **30** / 1 deg/step] |
| | Specifies the threshold temperature for high temperature condition. | | |
| 003 | Low Temp. Correction | *ENG | [0 to 15 / **5** / 1 deg/step] |
| | Specifies the temperature correction for the heating roller. When the low temperature condition (specified with SP1112-001) is detected, the value of this SP is added to the heating roller temperature. | | |

| | | | |
|---|---|---|---|
| 004 | High Temp. Correction | *ENG | [0 to 15 / **5** / 1 deg/step] |
| | Specifies the temperature correction for the heating roller. When the high temperature condition (specified with SP1112-002) is detected, the value of this SP is subtracted from the heating roller temperature. | | |
| 005 | Low Temp. Correction: Paper Feed | *ENG | [0 to 15 / **6.5** / 0.1 deg/step] |
| 006 | High Temp. Correction: Paper Feed | *ENG | [0 to 15 / **5** / 1 deg/step] |

| **1113** | **[Stand-by Time]** | | |
|---|---|---|---|
| 001 | After Ready | *ENG | [0 to 60 / **20** / 1 sec/step] |
| 003 | After Recovery | *ENG | [0 to 60 / **10** / 1 sec/step] |
| | Specifies the time for keeping the target temperature after recovery (SP1105-083) without any jobs. | | |
| 004 | After Job | *ENG | [0 to 60 / **10** / 1 sec/step] |
| 005 | PressureTemp: After Ready | *ENG | [0 to 160 / **100** / 1 deg/step] |
| 006 | Pressure Temp: After Job | *ENG | |
| 008 | ON/OFF Time Switch | *ENG | [0 to 999 / **300** / 1 sec/step] |

| 1115 | [Stand-by Idling] | | |
|---|---|---|---|
| 001 | Interval | *ENG | [1 to 240 / **60** / 1 min/step] |
| | Specifies the interval between idling during stand-by mode.<br>This idling during the stand-by mode prevents the roller deformation. | | |
| 002 | Idling Time | *ENG | [1 to 60 / **2** / 0.1 sec/step] |
| | Specifies the length of each idling operation during stand-by mode. | | |
| 003 | Idling Speed | *ENG | [0 to 1 / **0** / 1 mm/sec/step] |
| | | | |

| 1116 | [Ends Temp. Correction] | | |
|---|---|---|---|
| 010 | Center Temp. 1: 226– | ENG | [-10 / 10 / 5 / 1 deg/step] |
| | Specifies the temperature correction for the heating roller (center) when the paper width is 226 mm or more.<br>The start time of this SP can be adjusted with SP1116-018. | | |
| 011 | Ends Temp. 1: 226– | ENG | [-10 to 10 / **5** / 1 deg/step] |
| | Specifies the temperature correction for the heating roller (ends) when the paper width is 226 mm or more.<br>The start time of this SP can be adjusted with SP1116-018. | | |
| 012 | Center Temp. 2: 226– | ENG | [-10 to 10 / **0** / 1 deg/step] |
| | Specifies the temperature correction for the heating roller (center) when the paper width is 226 mm or more.<br>The start time of this SP can be adjusted with SP1116-019. | | |

| | | | | | |
|---|---|---|---|---|---|
| 013 | Ends Temp. 2: 226– | ENG | [-10 to 10 / **0** / 1 deg/step] | | |
| | Specifies the temperature correction for the heating roller (ends) when the paper width is 226 mm or more.<br>The start time of this SP can be adjusted with SP1116-019. | | | | |
| 014 | Center Temp. 3: –226 | ENG | [-10 to 10 / **5** / 1 deg/step] | | |
| | Specifies the temperature correction for the heating roller (center) when the paper width is less than 226 mm.<br>The start time of this SP can be adjusted with SP1116-020. | | | | |
| 015 | Ends Temp. 3: –226 | ENG | [-10 to 10 / **0** / 1 deg/step] | | |
| | Specifies the temperature correction for the heating roller (ends) when the paper width is less than 226 mm.<br>The start time of this SP can be adjusted with SP1116-020. | | | | |
| 016 | Center Temp. 4: –226 | ENG | [-10 to 10 / **0** / 1 deg/step] | | |
| | Specifies the temperature correction for the heating roller (center) when the paper width is less than 226 mm.<br>The start time of this SP can be adjusted with SP1116-021. | | | | |
| 017 | Ends Temp. 4: –226 | ENG | [-10 to 10 / **0** / 1 deg/step] | | |
| | Specifies the temperature correction for the heating roller (ends) when the paper width is less than 226 mm.<br>The start time of this SP can be adjusted with SP1116-021. | | | | |
| 018 | Control Time 1: 226– | ENG | [0 to 250 / **60** / 1 sec/step] | | |
| | Specifies the start time of the temperature correction that is set with SP1116-010 and -011.<br>The temperature correction is added when the time specified with this SP has passed after feeding the paper. | | | | |

| | | | | | |
|---|---|---|---|---|---|
| 019 | Control Time 2: 226– | ENG | [0 to 250 / **0** / 1 sec/step] | | |
| | Specifies the start time of the temperature correction that is set with SP1116-012 and -013.<br>The temperature correction is added when the time specified with this SP has passed after feeding the paper. | | | | |
| 020 | Control Time 3: –226 | ENG | [0 to 250 / **60** / 1 sec/step] | | |
| | Specifies the start time of the temperature correction that is set with SP1116-014 and -015.<br>The temperature correction is added when the time specified with this SP has passed after feeding the paper. | | | | |
| 021 | Control Time 4: –226 | ENG | [0 to 250 / **0** / 1 sec/step] | | |
| | Specifies the start time of the temperature correction that is set with SP1116-016 and -017.<br>The temperature correction is added when the time specified with this SP has passed after feeding the paper. | | | | |
| 022 | M-Thick 1: Center Temp >=226 | ENG | [-10 to 10 / **0** / 1 deg/step] | | |
| 023 | M-Thick 1: Ends Temp. >=226 | ENG | | | |
| 024 | M-Thick 2: Center Temp >=226 | ENG | [-10 to 10 / **0** / 1 deg/step] | | |
| 025 | M-Thick 2: Ends Temp. >=226 | ENG | | | |
| 026 | M-Thick 3: Center Temp >=226 | ENG | [-10 to 10 / 0 / 1 deg/step] | | |
| 027 | M-Thick 3: Ends Temp. >=226 | ENG | [-10 to 10 / 5 / 1 deg/step] | | |
| 028 | M-Thick 4: Center Temp >=226 | ENG | [-10 to 10 / **0** / 1 deg/step] | | |
| 029 | M-Thick 4: Ends Temp. >=226 | ENG | | | |
| 030 | Other1: Center Temp >=226 | ENG | [-10 to 10 / **0** / 1 deg/step] | | |
| 031 | Other1: End Temp >=226 | ENG | | | |

| | | | |
|---|---|---|---|
| 032 | Other2: Center Temp >=226 | ENG | [-10 to 10 / **0** / 1 deg/step] |
| 033 | Other2: End Temp >=226 | ENG | |
| 034 | Other3: Center Temp >=226 | ENG | [-10 to 10 / 0 / 1 deg/step] |
| 035 | Other3: End Temp >=226 | ENG | [-10 to 10 / 5 / 1 deg/step] |
| 036 | Other4: Center Temp >=226 | ENG | [-10 to 10 / **0** / 1 deg/step] |
| 037 | Other4: End Temp >=226 | ENG | |

| **1117** | **[Idling Time After Heater OFF]** | | |
|---|---|---|---|
| 001 | After Ready | ENG | [0 to 4 / **4** / 1 sec/step] **DFU** |
| | Specifies the idling time without the lamp on after reaching the ready temperature. | | |
| 002 | After Job End | ENG | [0 to 4 / **0** / 1 sec/step] |
| | Specifies the idling time without the lamp on after job end.<br>This idling prevents the heating roller overheating after job end. | | |

| **1118** | **[Curl Temperature Correction]** | | |
|---|---|---|---|
| 001 | Operation Pattern | *ENG | [0 to 3 / **0** / 1] |
| 002 | Humidity 1 | *ENG | [0 to 100 / **65** / 1 %] |
| 003 | Humidity 2 | *ENG | [0 to 100 / **80** / 1 %] |
| 004 | Pattern 1: MM: Fusing | *ENG | [-15 to 0 / **-5** / 1 deg] |
| 005 | Pattern 1: MM: Pressure | *ENG | [0 to 60 / **0** / 1 deg] |
| 006 | Pattern 1: HM: Fusing | *ENG | [-15 to 0 / **-5** / 1 deg] |
| 007 | Pattern 1: HM: Pressure | *ENG | [0 to 60 / **0** / 1 deg] |

| | | | |
|---|---|---|---|
| 008 | Pattern 2: MM: Fusing | *ENG | [-15 to 0 / **-5** / 1 deg] |
| 009 | Pattern 2: MM: Pressure | *ENG | [0 to 60 / **0** / 1 deg] |
| 010 | Pattern 2: HM: Fusing | *ENG | [-15 to 0 / **-5** / 1 deg] |
| 011 | Pattern 2: HM: Pressure | *ENG | [0 to 60 / **0** / 1 deg] |

| **1119** | **[FF Duty]** | | |
|---|---|---|---|
| 001 | Plain: Center | *ENG | [0 to 100 / **60** / 1 %] |
| 002 | Plain: Ends | *ENG | |
| 003 | Thin: Center | *ENG | [0 to 100 / **50** / 1 %] |
| 004 | Thin: Ends | *ENG | |
| 005 | Thick: Center | *ENG | [0 to 100 / **70** / 1 %] |
| 006 | Thick: Ends | *ENG | |
| 007 | Thick1: Center | *ENG | |
| 008 | Thick1: Ends | *ENG | |
| 009 | Thick2: Center | *ENG | |
| 010 | Thick2: Ends | *ENG | |
| 011 | Thick3: Center | *ENG | |
| 012 | Thick3: Ends | *ENG | |

| | | | |
|---|---|---|---|
| 013 | OHP: Center | *ENG | [0 to 100 / **40** / 1 %] |
| 014 | OHP: Ends | *ENG | |
| 015 | Special: Center | *ENG | |
| 016 | Special: Ends | *ENG | |
| 017 | Special1: Center | *ENG | |
| 018 | Special1: Ends | *ENG | |
| 019 | Special2: Center | *ENG | |
| 020 | Special2: Ends | *ENG | |
| 021 | Correction Environmental Correction: Low | *ENG | [-100 to 100 / **10** / 1 %] |
| 022 | Correction Environmental Correction: High | *ENG | [-100 to 100 / **0** / 1 %] |
| 023 | Initial Correction: Center | *ENG | |
| 024 | Initial Correction: Ends | *ENG | |
| 025 | Correction Interval Initial Correction | *ENG | [0 to 60 / **0** / 1 sec] |
| 034 | 1bin: Plain: Center | *ENG | [0 to 100 / **30** / 1 %] |
| 035 | 1bin: Plain: Ends | *ENG | |
| **[FF Limit Temp]** | | | |
| 026 | Offset: Center | *ENG | [0 to 50 / **25** / 1 deg] |
| 027 | Offset: Ends | *ENG | |

| **[FF Start Time]** | | | |
|---|---|---|---|
| 028 | F Gate Timer: FC: Full | *ENG | [0 to 10000 / **2100** / 1mm/sec] |
| 029 | F Gate Timer: FC: Half | *ENG | [0 to 10000 / **4000** / 1mm/sec] |
| 030 | F Gate Timer: BW: Full | *ENG | [0 to 10000 / **0** / 1mm/sec] |
| 031 | F Gate Timer: BW Half | *ENG | [0 to 10000 / **500** / 1mm/sec] |
| **[FF Correction Time]** | | | |
| 032 | Error Correction: Full | *ENG | [-5000 to 5000 / **0** / 1mm/sec] |
| 033 | Error Correction: Half | *ENG | |

| **1120** | **[Continues Print Mode Switch]** | | |
|---|---|---|---|
| 001 | Paper Feed Condition | *ENG | [0 or 2 / **0** / 1] |
| | Selects the paper feed timing.<br>0: Productivity priority, 1: Fusing quality priory | | |

| **1159** | **[Fusing Jam Detection]** | | |
|---|---|---|---|
| 001 | SC Display | *ENG | [0 or 1 / **0** / 1] |
| | Enables or disables the fusing consecutive jam (three times) SC detection.<br>0: No detection, 1: Detection | | |

| **1801** | **[Motor Speed Adj.] FA** | | |
|---|---|---|---|
| 001 | Registration:Plain:Low | *ENG | [–2 to 2 / **–0.6** / 0.1 %/step] |
| 002 | Registration:Plain:High | *ENG | [–2 to 2 / **–0.2** / 0.1 %/step] |
| 003 | Registration:Middle Thick:Low | *ENG | |
| 005 | Registration:Middle Thick:High | *ENG | |
| 006 | Registration:Thick 1:Low | *ENG | [–2 to 2 / **–0.4** / 0.1 %/step] |
| 008 | Registration:Thick 2:Low | *ENG | [–2 to 2 / **–0.4** / 0.1 %/step] |
| 009 | Registration:Thick 3:Low | *ENG | |
| 010 | Duplex CW:Plane:Low | *ENG | [–4 to 4 / **0.0** / 0.1 %/step] |
| 011 | Duplex CW:Normal:High | *ENG | |
| 012 | Duplex CW:Middle Thick:Low | *ENG | |
| 014 | Duplex CW:Middle Thick:High | *ENG | |
| 015 | Duplex CW:Thick1:Low | *ENG | |
| 017 | Duplex CW:Thick2:Low | *ENG | |
| 018 | Duplex CW:Thick3:Low | *ENG | |
| 019 | Duplex CCW:Normal:High | *ENG | |
| 021 | Duplex CCW:Middle Thick:high | *ENG | |
| 022 | Duplex CCW:Thick1:Low | *ENG | |
| 024 | Reverse CW:Normal:High | *ENG | [–4 to 4 / **0** / 0.1%/step] |
| 026 | Reverse CW:Middle Thick:High | *ENG | |
| 027 | Reverse CW:Thick1:Low | *ENG | |
| 029 | Reverse CCW:Normal:High | *ENG | |

| | | | |
|---|---|---|---|
| 031 | Reverse CCW:Middle Thick:High | *ENG | |
| 032 | Reverse CCW:Thick1:Low | *ENG | |
| 034 | Feed:Plain:Low | *ENG | [–2 to 2 / –**0.6** / 0.1 %/step] |
| 035 | Feed:Plain:High | *ENG | [–2 to 2 / –**0.2** / 0.1 %/step] |
| 036 | Feed:Middle thick:Low | *ENG | |
| 037 | Feed:Middle thick:Mid | *ENG | |
| 038 | Feed:Middle thick:High | *ENG | |
| 039 | Feed:Thick 1:Low | *ENG | [–2 to 2 / –**0.4** / 0.1 %/step] |
| 041 | Feed:Thick 2:Low | *ENG | |
| 042 | Feed:Thick 3:Low | *ENG | |
| 043 | Bridge Motor:Low | *ENG | [–4 to 4 / **0** / 0.1 %/step] |
| 044 | Bridge Motor:Mid | *ENG | |
| 045 | Bridge Motor:High | *ENG | |
| 060 | KOpcDevMot:High | *ENG | [–4 to 4 / –**0.7** / 0.01 %/step] |
| 062 | KOpcDevMot:Low | *ENG | |
| 063 | MOpcDevMot:High | *ENG | [–10 to 10 / 0 / 1 step/step] |
| 065 | MOpcDevMot:Low | *ENG | [–14 to 14 / 0 / 1 step/step] |
| 066 | COpcDevMot:High | *ENG | [–10 to 10 / **0** / 1 step/step] |
| 068 | COpcDevMot:Low | *ENG | [–14 to 14 / **0** / 1 step/step] |
| 069 | YOpcDevMot:High | *ENG | [–10 to 10 / **0** / 1 step/step] |
| 071 | YOpcDevMot:Low | *ENG | [–14 to 14 / **0** / 1 step/step] |
| 072 | Fusing: High | *ENG | [–4 to 4 / **0.3** / 0.01 %/step] |

| | | | |
|---|---|---|---|
| 074 | Fusing: Low | *ENG | [–4 to 4 / **-0.6** / 0.01 %/step] |
| 075 | TransferMot:High | *ENG | [–4 to 4 / **-0.3** / 0.01 %/step] |
| 077 | TransferMot:Low | *ENG | |
| 078 | TonerMot | *ENG | [–30 to 30 / **10** / 5 %/step] |
| 079 | Fusing Exit Motor: 1200 | *ENG | [–4 to 4 / **-0.2** / 0.01 %/step] |
| 100 | Drum Adjust | *ENG | [0 or 1 / **1** / 1] |
| 101 | 230mm/s:M | *ENG | [–7 to 7 / **0**/ 1 step/step] |
| 102 | 230mm/s:C | *ENG | |
| 103 | 230mm/s:Y | *ENG | |
| 104 | 205mm/s:M | *ENG | [–9 to 9 / **0** / 1 step/step] |
| 105 | 205mm/s:C | *ENG | |
| 106 | 205mm/s:Y | *ENG | |
| 107 | 154mm/s:M | *ENG | [–14 to 14 / **0** / 1 step/step] |
| 108 | 154mm/s:C | *ENG | |
| 109 | 154mm/s:Y | *ENG | |
| 112 | 77mm/s:Y | | |

| **1901** | **[Recovery Temp. Ope. Time]** | | |
|---|---|---|---|
| 004 | - | *ENG | [0 to 60 / **10** / 1 sec/step] **Not used** |

| **1902** | **[Amplitude Control]** | | |
|---|---|---|---|
| 001 | Execute | - | [0 or 1 / **0** / 1]<br>Execute drum phase adjustment. |
| 002 | Result | *ENG | [0 to 3 / **0** / 1]<br>Displays the result of drum phase adjustment.<br>0: Successfully done<br>2: Sampling failure<br>3: Insufficient detection number |
| 003 | Auto Execution | *ENG | [0 or 1 / **1** / 1]<br>Turns the automatic drum phase adjustment on or off.<br>0: Off, 1: On |

| **1903** | **[Drive Current Setting]** | | |
|---|---|---|---|
| 001 | Duplex Motor Clockwise | ENG | [0 or 1 / **0** / 1 /step]<br>0: Large Current, 1: Small Current |
| 002 | Duplex Motor Counterclockwise | ENG | [0 or 1 / **1** / 1 /step]<br>0: Large Current, 1: Small Current |

| **1907** | **[Paper Feed Timing Adj.] DFU** | | |
|---|---|---|---|
| 002 | Feed Solenoid ON: Plain | *ENG | [–10 to 40 / **0** / 2.5 mm/step] |
| 003 | Feed Clutch OFF: Plain | *ENG | [–10 to 10 / **0** / 1 mm/step] |
| 004 | Feed Clutch ON: Plain | *ENG | |
| 005 | Inverter Stop Position | *ENG | |
| 006 | Reverse Stop Position | *ENG | |
| 007 | Re-Feed Stop Position | *ENG | |
| 008 | By-pass Solenoid OFF | *ENG | [0 to 40 / **0** / 1 mm/step] |
| 009 | By-pass Solenoid Re-ON | *ENG | [0 or 1 / **1** / 1] |
| 010 | By-pass Feed Clutch ON | *ENG | [–10 to 10 / **0** / 1 mm/step] |
| 012 | Feed Solenoid ON: Thick | *ENG | [–10 to 40 / **0** / 2.5 mm/step] |
| 013 | Feed Clutch OFF: Thick | *ENG | [–10 to 10 / **0** / 1 mm/step] |
| 014 | Feed Clutch ON: Thick | *ENG | |

| 1908 | [Paper Bank Feed Timing Adj.] DFU | | |
|---|---|---|---|
| 008 | Feed Clutch ON: Plain | *ENG | [–10 to 10 / **0** / 1 mm/step] |
| 009 | Feed Clutch ON: Thick | *ENG | |
| 010 | Bridge Junction Gate Sol-ON | *ENG | |
| 011 | Bridge Junction Gate Sol-OFF | *ENG | |
| 012 | 1 Bin Junction Gate Sol-ON | *ENG | |
| 013 | 1 Bin Junction Gate Sol-OFF | *ENG | |
| 015 | Junction Gate SOL1:ON:Plain | *ENG | |
| 016 | Junction Gate SOL1:ON:Thick | *ENG | |
| 017 | Junction Gate SOL1:OFF:Plain | *ENG | |
| 018 | Junction Gate SOL1:OFF:Thick | *ENG | |

| 1950 | [Fan Cooling Time Set] | | |
|---|---|---|---|
| 002 | Fusing Exit Fan | *ENG | [0 to 60 / **0** / 1 sec/step] |
| 006 | Main Suction Fan | *ENG | |
| 007 | Paper Exit Fan | *ENG | |
| 008 | PSU Fan | *ENG | |
| 011 | Second Duct Fan | *ENG | |
| 012 | Third Duct Fan | *ENG | |
| 013 | Right-rear Suction Fan | *ENG | |

## *SP2-XXX (Drum)*

| | | | |
|---|---|---|---|
| **2005** | **[Charge DC Voltage]** Charge Roller DC Voltage Adjustment<br>(Paper Type, Process Speed, Color)<br>Paper Type –> Plain, Thick 1, Thick 2 | | |
| | Adjusts the DC component of the charge roller bias in the various print modes. Charge bias (DC component) is automatically adjusted during process control; therefore, adjusting these settings does not effect while process control mode (SP3-041-1 Default: ON) is activated. When deactivating process control mode with SP3-041-1, the values in these SP modes are used for printing. | | |
| 001 | Plain: Bk | *ENG | [0 to 1000 / **690** / 10 –V/step] |
| 002 | Plain: M | *ENG | |
| 003 | Plain: C | *ENG | |
| 004 | Plain: Y | *ENG | |
| 005 | Thick 1: Bk | *ENG | |
| 006 | Thick 1: M | *ENG | |
| 007 | Thick 1: C | *ENG | |
| 008 | Thick 1: Y | *ENG | |
| 009 | Thick 2&FINE: Bk | *ENG | |
| 010 | Thick 2&FINE: M | *ENG | |
| 011 | Thick 2&FINE: C | *ENG | |
| 012 | Thick 2&FINE: Y | *ENG | |
| 013 | Correction Plain | *ENG | [–100 to 100 / **-24** / 1 –V/step] |
| 014 | Correction Thick 1 | *ENG | [–100 to 100 / –**2** / 1 –V/step] |
| 015 | Correction Thick 2&FINE | *ENG | [–100 to 100 / **2** / 1 –V/step] |

| | | | |
|---|---|---|---|
| **2006** | **[Charge AC Voltage]** Charge Roller AC Voltage Adjustment<br>(Paper Type, Process Speed, Color)<br>Paper Type –> Plain, Thick 1, Thick 2 | | |
| | Adjusts the AC component of the charge roller bias in the various print modes. Charge bias (AC component) is adjusted by environment correction (SP2-007-xxx to SP2-011-xxx). These SPs are activated only when SP2-012-1 is set to "1: manual control". | | |
| 001 | Plain: Bk | *ENG | [0 to 3000 / **2100** / 10V/step] |
| 002 | Plain: M | *ENG | |
| 003 | Plain: C | *ENG | |
| 004 | Plain: Y | *ENG | |
| 005 | Thick 1: Bk | *ENG | |
| 006 | Thick 1: M | *ENG | |
| 007 | Thick 1: C | *ENG | |
| 008 | Thick 1: Y | *ENG | |
| 009 | Thick 2&FINE: Bk | *ENG | |
| 010 | Thick 2&FINE: M | *ENG | |
| 011 | Thick 2&FINE: C | *ENG | |
| 012 | Thick 2&FINE: Y | *ENG | |

| | | | |
|---|---|---|---|
| **2007** | **[Charge AC Current: LL]** Charge Roller AC Current Adjustment for LL (Color) | | |
| | Displays/sets the AC current target of the charge roller for LL environment (Low temperature and Low humidity). **DFU** | | |
| 001 | Environmental Target: Bk | *ENG | [0 to 3000 / **1400** / 10 µA/step] |
| 002 | Environmental Target: M | *ENG | |
| 003 | Environmental Target: C | *ENG | |
| 004 | Environmental Target: Y | *ENG | |

| | | | |
|---|---|---|---|
| **2008** | **[Charge AC Current: ML]** Charge Roller AC Current Adjustment for MM (Color) | | |
| | Displays/sets the AC current target of the charge roller for ML environment (Meddle temperature and Low humidity). **DFU** | | |
| 001 | Environmental Target: Bk | *ENG | [0 to 3000 / **1500** / 10 µA/step] |
| 002 | Environmental Target: M | *ENG | |
| 003 | Environmental Target: C | *ENG | |
| 004 | Environmental Target: Y | *ENG | |

| | | | |
|---|---|---|---|
| **2009** | **[Charge AC Current: MM]** Charge Roller AC Current Adjustment for MM (Color) | | |
| | Displays/sets the AC current target of the charge roller for MM environment (Middle temperature and Middle humidity). **DFU** | | |
| 001 | Environmental Target: Bk | *ENG | [0 to 3000 / **1700** / 10 µA/step] |
| 002 | Environmental Target: M | *ENG | |
| 003 | Environmental Target: C | *ENG | |
| 004 | Environmental Target: Y | *ENG | |

| | | | |
|---|---|---|---|
| **2010** | **[Charge AC Current: MH]** Charge Roller AC Current Adjustment for MH (Color) | | |
| | Displays/sets the AC current target of the charge roller for MH environment (Middle temperature and High humidity). **DFU** | | |
| 001 | Environmental Target: Bk | *ENG | [0 to 3000 / **1800** / 10 µA/step] |
| 002 | Environmental Target: M | *ENG | |
| 003 | Environmental Target: C | *ENG | |
| 004 | Environmental Target: Y | *ENG | |

| | | | |
|---|---|---|---|
| **2011** | **[Charge AC Current: HH]** Charge Roller AC Current Adjustment for HH (Color) | | |
| | Displays/sets the AC current target of the charge roller for HH environment (High temperature and High humidity). **DFU** | | |
| 001 | Environmental Target: Bk | *ENG | [0 to 3000 / **1180** / 10 μA/step] |
| 002 | Environmental Target: M | *ENG | |
| 003 | Environmental Target: C | *ENG | |
| 004 | Environmental Target: Y | *ENG | |

| | | | |
|---|---|---|---|
| **2012** | **[Charge Output Control]** | | |
| 001 | AC Voltage | *ENG | Selects the AC voltage control type.<br>[0 or 1 / **0** / 1 /step]<br>0: Process control<br>1: Manual control (AC voltages are decided with SP2006.) |

| | | | |
|---|---|---|---|
| **2013** | **[Environmental Correction: PCU]** | | |
| 001 | Current Environmental: Display | *ENG | Displays the environmental condition, which is measured in absolute humidity.<br>[1 to 5 / **–** / 1 /step]<br>1: LL (LL <= 4.3 g/m$^3$)<br>2: ML (4.3 < ML <= 11.3 g/m$^3$)<br>3: MM (11.3 < MM <= 18.0 g/m$^3$)<br>4: MH (18.0 < MH <= 24.0 g/m$^3$)<br>5: HH (24.0 g/m$^3$ < HH) |

| | | | |
|---|---|---|---|
| 002 | Forced Setting | *ENG | Selects the environmental condition manually.<br>[0 to 5 / **0** / 1 /step]<br>0: The environmental condition is determined automatically.<br>1: LL, 2: ML, 3: MM, 4: MH, 5: HH |
| 003 | Absolute Humidity: Threshold 1 | *ENG | Changes the humidity threshold between LL and ML.<br>[0 to 100 / **4.3** / 0.01 g/m$^3$/step] |
| 004 | Absolute Humidity: Threshold 2 | *ENG | Changes the humidity threshold between ML and MM.<br>[0 to 100 / **11.3** / 0.01 g/m$^3$/step] |
| 005 | Absolute Humidity: Threshold 3 | *ENG | Changes the humidity threshold between MM and MH.<br>[0 to 100 / **18.0** / 0.01 g/m$^3$/step] |
| 006 | Absolute Humidity: Threshold 4 | *ENG | Changes the humidity threshold between MH and HH.<br>[0 to 100 / **24.0** / 0.01 g/m$^3$/step] |
| 007 | Current Temp.: Display | *ENG | Displays the current temperature.<br>[0 to 100 / **0** / 1 deg/step] |
| 008 | Current Relative Humidity: Display | *ENG | Displays the current relative humidity.<br>[0 to 100 / **0** / 1%RH/step] |
| 009 | Current Absolute Humidity: Display | *ENG | Displays the absolute humidity.<br>[0 to 100 / **0** / 0.01 g/m$^3$/step] |

| | | | |
|---|---|---|---|
| 010 | Previous Environmental: Display | *ENG | Displays the previous environmental condition, which is measured in absolute humidity.<br>[1 to 5 / **–** / 1 /step]<br>1: LL, 2: ML, 3: MM, 4: MH, 5: HH |
| 011 | Previous Temp.: Display | *ENG | Displays the previous temperature.<br>[0 to 100 / **0** / 1 deg/step] |
| 012 | Previous Relative Humidity: Display | *ENG | Displays the previous relative humidity.<br>[0 to 100 / **0** / 1%RH/step] |
| 013 | Previous Absolute Humidity: Display | *ENG | Displays the previous absolute humidity.<br>[0 to 100 / **0** / 0.01 g/m$^3$/step] |

| **2014** | **[Charge AC Control: Setting]** | | |
|---|---|---|---|
| 001 | Exec Interval: Power ON | *ENG | [0 to 2000 / **500** / 1 page/step] |
| 002 | Exec Interval: Print | *ENG | |
| 003 | Page Interval | *ENG | [0 to 500 / **10** / 5 page/step] |
| 004 | Temperature | *ENG | [0 to 99 / **25** / 1 deg/step] |
| 005 | Relative Humidity | *ENG | [0 to 99 / **50** / 1 %RH/step] |
| 006 | Absolute Humidity | *ENG | [0 to 99 / **12** / 1 g/m$^3$/step] |
| 007 | Temp Threshold M | *ENG | [0 to 99 / **10** / 1 deg/step] |
| 008 | RH Threshold M | *ENG | [0 to 99 / **50** / 1 %RH/step] |
| 009 | AH Threshold M | *ENG | [0 to 99 / **6** / 1 g/m$^3$/step] |
| 010 | Temp Threshold S | *ENG | [0 to 20 / **1** / 0.1 deg/step] |

| | | | |
|---|---|---|---|
| 011 | RH Threshold S | *ENG | [0 to 50 / **5** / 1 %RH/step] |
| 012 | AH Threshold S | *ENG | [0 to 20 / **1** / 0.1 g/m$^3$/step] |
| 013 | Non-use Time | *ENG | [0 to 1440 / **360** / 10 min/step] |

| **2015** | **[Charge AC Adj: Result]** | | |
|---|---|---|---|
| 001 | Bk | *ENG | [0 to 9 / **0** / 1 /step] |
| 002 | M | *ENG | |
| 003 | C | *ENG | |
| 004 | Y | *ENG | |

| | | | |
|---|---|---|---|
| **2101** | **[Color Registration Correction] FA** | | |
| | These values are the parameters for the automatic line position adjustment and are adjusted at the factory. However, you must input a value for SP2101-001 after replacing the laser optics housing unit. For details, see "Laser Optics Housing Unit" in the "Replacement and Adjustment" section. The value should be provided with the new laser optics housing unit. | | |
| 001 | Main Dot: Bk | *ENG | [–512 to 511 / **0** / 1 dot/step] |
| 002 | Main Dot: M | *ENG | |
| 003 | Main Dot: C | *ENG | |
| 004 | Main Dot: Y | *ENG | |
| 005 | Sub Line: Bk | *ENG | [–16384 to 16383 / **0** / 1 line/step] |
| 006 | Sub Line: M | *ENG | |
| 007 | Sub Line: C | *ENG | |
| 008 | Sub Line: Y | *ENG | |

| **2102** | **[Magnification Adjustment] DFU** | | |
|---|---|---|---|
| 001 | Main Mag.: High Speed: Bk | *ENG | These are results of the main scan length adjustment.<br>[0 to 560 / **280** / 1 /step] |
| 002 | Main Mag.: Medium Speed: Bk | *ENG | |
| 003 | Main Mag.: Low Speed: Bk | *ENG | |
| 004 | Main Mag.: High Speed: M | *ENG | |
| 005 | Main Mag.: Medium Speed: M | *ENG | |
| 006 | Main Mag.: Low Speed: M | *ENG | |
| 007 | Main Mag.: High Speed: C | *ENG | |
| 008 | Main Mag.: Medium Speed: C | *ENG | |
| 009 | Main Mag.: Low Speed: C | *ENG | |
| 010 | Main Mag.: High Speed: Y | *ENG | |
| 011 | Main Mag.: Medium Speed: Y | *ENG | |
| 012 | Main Mag.: Low Speed: Y | *ENG | |
| 013 | Offset: Mag Bk1-2 | *ENG | [-256 to 255 / **0** / 1 sub-dot/step] |
| 014 | Offset: Mag M1-2 | *ENG | |
| 015 | Offset: Mag C1-2 | *ENG | |
| 016 | Offset: Mag Y1-2 | *ENG | |

| | | | |
|---|---|---|---|
| **2103** | **[Erase Margin Adjustment]** (Area, Paper Size) | | |
| | Adjusts the erase margin by deleting image data at the margins. | | |
| 001 | Lead Edge Width | *ENG | [0 to 9.9 / **4.2** / 0.1 mm/step] |
| 002 | Trail. Edge Width | *ENG | |
| 003 | Left | *ENG | [0 to 9.9 / **2** / 0.1 mm/step] |
| 004 | Right | *ENG | |
| 005 | Lead Edge Width: Thin | *ENG | [0 to 9.9 / **5** / 0.1 mm/step] |
| 006 | Duplex Trail. L Size | *ENG | [0 to 4 / **1** / 0.1 mm/step] |
| 007 | Duplex Trail. M Size | *ENG | [0 to 4 / **0.8** / 0.1 mm/step] |
| 008 | Duplex Trail. S Size | *ENG | [0 to 4 / **0** / 0.1 mm/step] |
| 009 | Duplex Left Edge | *ENG | [0 to 1.5 / **0.3** / 0.1 mm/step] |
| 010 | Duplex Right Edge | *ENG | |
| 011 | Duplex Trail. L Size:Thick | *ENG | [0 to 4 / **1** / 0.1 mm/step] |
| 012 | Duplex Trail. M Size:Thick | *ENG | [0 to 4 / **0.8** / 0.1 mm/step] |
| 013 | Duplex Trail. S Size:Thick | *ENG | [0 to 4 / **0.6** / 0.1 mm/step] |
| 014 | Duplex Left Edge:Thick | *ENG | [0 to 1.5 / **0.3** / 0.1 mm/step] |
| 015 | Duplex Right Edge:Thick | *ENG | |

| **2105** | **[LD Power Adj.]** (Process Speed, Color) | | |
|---|---|---|---|
| | Adjusts the LD power of each color for each process speed.<br>Each LD power setting is decided by process control.<br>High Speed: 154 mm/sec, Middle Speed: 111 mm/sec,<br>Low Speed: 77 mm/sec | | |
| 001 | High Speed: Bk | *ENG | [50 to 120 / **100** / 1%/step]<br>Decreasing a value makes lines thinner on the output.<br>Increasing a value makes lines thicker on the output. |
| 002 | High Speed: M | *ENG | |
| 003 | High Speed: C | *ENG | |
| 004 | High Speed: Y | *ENG | |
| 005 | Middle Speed: Bk | *ENG | |
| 006 | Middle Speed: M | *ENG | |
| 007 | Middle Speed: C | *ENG | |
| 008 | Middle Speed: Y | *ENG | |
| 009 | Low Speed: Bk | *ENG | |
| 010 | Low Speed: M | *ENG | |
| 011 | Low Speed: C | *ENG | |
| 012 | Low Speed: Y | *ENG | |

| **2106** | **[Polygon Rotation Time]** | | |
|---|---|---|---|
| | Adjusts the time of the polygon motor rotation. **DFU** | | |
| 001 | Warming-Up | *ENG | [0 to 60 / **10** / 1 sec/step] |
| 002 | Job End | *ENG | |

| | | | |
|---|---|---|---|
| **2107** | **[Image Parameter]** | | |
| | **DFU** | | |
| 001 | Image Gamma Flag | *ENG | [0 or 1 / **1** / 1 /step] |
| 002 | Shading Correction Flag | *ENG | |

| | | | |
|---|---|---|---|
| **2109** | **[Test Pattern]** | | |
| | Generates the test pattern using "COPY Window" tab in the LCD. | | |
| 003 | Pattern Selection | - | [0 to 23 / **0** / 1/step]<br>0 None<br>1: 1-dot line pattern (Vertical)<br>2: 2-dot line pattern (Vertical)<br>3: 1-dot line pattern (Horizontal)<br>4: 2-dot line pattern (Horizontal)<br>5: 1-dot grid pattern (Vertical)<br>6: 1-dot grid pattern (Horizontal)<br>7: 1-dot grid pattern (Fine)<br>8: 1-dot grid pattern (Rough)<br>9: 1-dot slant pattern (Fine)<br>10: 1-dot slant pattern (Rough)<br>11. 1-dot pattern<br>12. 2-dot pattern<br>13. 4-dot pattern<br>14. 1-dot trimming pattern<br>15: Cross stitch: sub-scan<br>16: Cross stitch: main-scan<br>17: Belt pattern (Horizontal)<br>18: Belt pattern (Vertical)<br>19: Checkered flag<br>20: Gray scale (Vertical)<br>21: Gray scale (Horizontal)<br>22: Dual beams density pattern<br>23: Solid |

| | | | |
|---|---|---|---|
| 005 | Color Selection | - | Specifies the color for the test pattern.<br>[1 to 4 / **1** / 1/step]<br>1: All colors, 2: Magenta, 3: Yellow, 4: Cyan |
| 006 | Density: Bk | - | Specifies the color density for the test pattern.<br>[0 to 15 / **15** / 1 /step]<br>0: Lightest density<br>15: Darkest density |
| 007 | Density: M | - | |
| 008 | Density: C | - | |
| 009 | Density: Y | - | |

| **2111** | **[Forced Line Position Adj.]** | | |
|---|---|---|---|
| 001 | Mode a | - | Executes the fine line position adjustment twice.<br>If this SP is not completed (NG is displayed), do SP2111-003 first and then try this SP again. |
| 002 | Mode b | - | Executes the fine line position adjustment once.<br>If this SP is not completed, do SP2111-003 first and then try this SP again. |
| 003 | Mode c | - | Executes the rough line position adjustment once.<br>After doing this SP, make sure to execute SP2111-001 or -002. Otherwise, the line position adjustment is not perfectly done. |

| **2112** | **[TM/ID Sensor Check]** ID Sensor Check **FA** | | |
|---|---|---|---|
| 001 | Execute | | This SP is used to check the ID sensors at the factory. The results of this SP are displayed in SP2140 to SP2145. |

| **2117** | **[Skew Adjustment]** | | |
|---|---|---|---|
| | Specifies a skew adjustment value for the skew motor M, C or Y.<br>These SPs must be used when a new laser optics housing unit is installed or when SC285 occurs. For details, see “Laser Optics Housing Unit” in the "Replacement and Adjustment" section. | | |
| 001 | Pulse: M | *ENG | [–100 to 100 / **0** / 1 pulse/step] |
| 002 | Pulse: C | *ENG | |
| 003 | Pulse: Y | *ENG | |

| **2118** | **[Skew Adjustment]** | | |
|---|---|---|---|
| 001 | Execute: M | *ENG | Changes the current skew adjustment values to the values specified with SP2117. These SPs must be used when a new laser optics housing unit is installed or when SC285 occurs. For details, see “Laser Optics Housing Unit” in the "Replacement and Adjustment" section. |
| 002 | Execute: C | *ENG | |
| 003 | Execute: Y | *ENG | |

| | | | |
|---|---|---|---|
| **2119** | **[Skew Adjustment Display]** | | |
| | Displays the current skew adjustment value for each skew motor. | | |
| 001 | M | *ENG | [–50 to 50 / **0** / 1 pulse/step] |
| 002 | C | *ENG | |
| 003 | Y | *ENG | |

| | | | |
|---|---|---|---|
| **2120** | **[Thick Paper Skew Adj]** | | |
| | Selects the skew adjustment value for thick paper. | | |
| 001 | On/Off | *ENG | [0 or 1 / **1** / 1 /step]<br>0: Off, 1: On |

| | | | |
|---|---|---|---|
| **2140** | **[ID Sensor Check Result] DFU** | | |
| | Displays the results of the ID sensor check.<br>Bk, M, C, Y: ID sensors for the process control<br>Front, Center, Rear: ID sensors for the automatic line position adjustment | | |
| 001 | Bk | *ENG | [0 to 1024 / **0** / 1/step] |
| 002 | M | *ENG | |
| 003 | C | *ENG | |
| 004 | Y | *ENG | |
| 005 | Front | *ENG | |
| 006 | Center | *ENG | |
| 007 | Rear | *ENG | |

| | | | |
|---|---|---|---|
| **2141** | **[ID Sensor Check Result: Ave.] DFU** | | |
| | Displays the average result values of the ID sensor check.<br>Bk, M, C, Y: ID sensors for the process control<br>Front, Center, Rear: ID sensors for the automatic line position adjustment | | |
| 001 | Bk | *ENG | [0 to 5.5 / **0** / 0.01V/step] |
| 002 | M | *ENG | |
| 003 | C | *ENG | |
| 004 | Y | *ENG | |
| 005 | Front | *ENG | |
| 006 | Center | *ENG | |
| 007 | Rear | *ENG | |

| | | | |
|---|---|---|---|
| **2142** | **[ID Sensor Check Result] DFU** | | |
| | Displays the maximum result values of the ID sensor check.<br>Bk, M, C, Y: ID sensors for the process control<br>Front, Center, Rear: ID sensors for the automatic line position adjustment | | |
| 001 | Maximum: Bk | *ENG | [0 to 5.5 / **0** / 0.01V/step] |
| 002 | Maximum: M | *ENG | |
| 003 | Maximum: C | *ENG | |
| 004 | Maximum: Y | *ENG | |
| 005 | Maximum: Front | *ENG | |
| 006 | Maximum: Center | *ENG | |
| 007 | Maximum: Rear | *ENG | |

| | | | |
|---|---|---|---|
| **2143** | **[ID Sensor Check Result] DFU** | | |
| | Displays the minimum result values of the ID sensor check.<br>Bk, M, C, Y: ID sensors for the process control<br>Front, Center, Rear: ID sensors for the automatic line position adjustment | | |
| 001 | Minimum: Bk | *ENG | [0 to 5.5 / **0** / 0.01V/step] |
| 002 | Minimum: M | *ENG | |
| 003 | Minimum: C | *ENG | |
| 004 | Minimum: Y | *ENG | |
| 005 | Minimum: Front | *ENG | |
| 006 | Minimum: Center | *ENG | |
| 007 | Minimum: Rear | *ENG | |

| | | | |
|---|---|---|---|
| **2144** | **[ID Sensor Check Result] DFU** | | |
| | Displays the maximum result 2 values of the ID sensor check.<br>Bk, M, C, Y: ID sensors for the process control<br>Front, Center, Rear: ID sensors for the automatic line position adjustment | | |
| 001 | Maximum 2: Bk | *ENG | [0 to 5.5 / **0** / 0.01V/step] |
| 002 | Maximum 2: M | *ENG | |
| 003 | Maximum 2: C | *ENG | |
| 004 | Maximum 2: Y | *ENG | |
| 005 | Maximum 2: Front | *ENG | |
| 006 | Maximum 2: Center | *ENG | |
| 007 | Maximum 2: Rear | *ENG | |

| | | | |
|---|---|---|---|
| **2145** | **[ID Sensor Check Result] DFU** | | |
| | Displays the minimum result 2 values of the ID sensor check.<br>Bk, M, C, Y: ID sensors for the process control<br>Front, Center, Rear: ID sensors for the automatic line position adjustment | | |
| 001 | Minimum 2: Bk | *ENG | [0 to 5.5 / **0** / 0.01V/step] |
| 002 | Minimum 2: M | *ENG | |
| 003 | Minimum 2: C | *ENG | |
| 004 | Minimum 2: Y | *ENG | |
| 005 | Minimum 2: Front | *ENG | |
| 006 | Minimum 2: Center | *ENG | |
| 007 | Minimum 2: Rear | *ENG | |

| | | | |
|---|---|---|---|
| **2150** | **[Area Mag. Correction]** LD Pulse Area Correction (Color, Area) **FA** | | |
| | Adjusts the magnification for each area. The main scan (297 mm) is divided into 8 areas. Area 1 is at the front side of the machine (left side of the image) and area 8 is at the rear side of the machine (right side of the image).<br>Decreasing a value makes the image shift to the left side on the print.<br>Increasing a value makes the image shift to the right side on the print.<br>1 pulse = 1/16 dot | | |
| 027 | Area0: Bk | *ENG | [-256 to 255 / **0** / 1sub-dot/step] |
| 028 | Area1: Bk | *ENG | Adjusts the area magnification for LD 0.<br>[–256 to 255 / **0** / 1 sub-dot/step ] |
| 029 | Area2: Bk | *ENG | |
| 030 | Area3: Bk | *ENG | |
| 031 | Area4: Bk | *ENG | |
| 032 | Area5: Bk | *ENG | |
| 033 | Area6: Bk | *ENG | |
| 034 | Area7: Bk | *ENG | |
| 035 | Area8: Bk | *ENG | |
| 036 | Area9: Bk | *ENG | Not used |
| 037 | Area10: Bk | *ENG | |
| 038 | Area11: Bk | *ENG | |
| 039 | Area12: Bk | *ENG | |
| 040 | Area0: Bk | *ENG | |

| | | | |
|---|---|---|---|
| 041 | Area1: Bk | *ENG | Adjusts the area magnification for LD 1.<br>[–256 to 255 / **0** / 1 sub-dot/step ] |
| 042 | Area2: Bk | *ENG | |
| 043 | Area3: Bk | *ENG | |
| 044 | Area4: Bk | *ENG | |
| 045 | Area5: Bk | *ENG | |
| 046 | Area6: Bk | *ENG | |
| 047 | Area7: Bk | *ENG | |
| 048 | Area8: Bk | *ENG | |
| 049 | Area9: Bk | *ENG | Not used |
| 050 | Area10: Bk | *ENG | |
| 051 | Area11: Bk | *ENG | |
| 052 | Area12: Bk | *ENG | |
| 079 | Area0: M | *ENG | |
| 080 | Area1: M | *ENG | Adjusts the area magnification for LD 0.<br>[–255 to 255 / **0** / 1 sub-dot/step] |
| 081 | Area2: M | *ENG | [–256 to 255 / **0** / 1 sub-dot/step] |
| 082 | Area3: M | *ENG | |
| 083 | Area4: M | *ENG | |
| 084 | Area5: M | *ENG | |
| 085 | Area6: M | *ENG | |
| 086 | Area7: M | *ENG | |
| 087 | Area8: M | *ENG | |

| | | | |
|---|---|---|---|
| 088 | Area9: M | *ENG | Not used |
| 089 | Area10: M | *ENG | |
| 090 | Area11: M | *ENG | |
| 091 | Area12: M | *ENG | |
| 092 | Area0: Bk | *ENG | |
| 093 | Area1: Bk | *ENG | Adjusts the area magnification for LD 1.<br>[–256 to 255 / **0** / 1 sub-dot/step] |
| 094 | Area2: Bk | *ENG | |
| 095 | Area3: Bk | *ENG | |
| 096 | Area4: Bk | *ENG | |
| 097 | Area5: Bk | *ENG | |
| 098 | Area6: Bk | *ENG | |
| 099 | Area7: Bk | *ENG | |
| 100 | Area8: Bk | *ENG | |
| 101 | Area9: Bk | *ENG | Not used |
| 102 | Area10: Bk | *ENG | |
| 103 | Area11: Bk | *ENG | |
| 104 | Area12: Bk | *ENG | |
| 131 | Area0: C | *ENG | |

| | | | |
|---|---|---|---|
| 132 | Area1: C | *ENG | Adjusts the area magnification for LD 0.<br>[–256 to 255 / **0** / 1 sub-dot/step] |
| 133 | Area2: C | *ENG | |
| 134 | Area3: C | *ENG | |
| 135 | Area4: C | *ENG | |
| 136 | Area5: C | *ENG | |
| 137 | Area6: C | *ENG | |
| 138 | Area7: C | *ENG | |
| 139 | Area8: C | *ENG | |
| 140 | Area9: C | *ENG | Not used |
| 141 | Area10: C | *ENG | |
| 142 | Area11: C | *ENG | |
| 143 | Area12: C | *ENG | |
| 144 | Area0: C | *ENG | |
| 145 | Area1: C | *ENG | Adjusts the area magnification for LD 1.<br>[–256 to 255 / **0** / 1 sub-dot/step] |
| 146 | Area2: C | *ENG | |
| 147 | Area3: C | *ENG | |
| 148 | Area4: C | *ENG | |
| 149 | Area5: C | *ENG | |
| 150 | Area6: C | *ENG | |
| 151 | Area7: C | *ENG | |
| 152 | Area8: C | *ENG | |

| | | | |
|---|---|---|---|
| 153 | Area9: C | *ENG | Not used |
| 154 | Area10: C | *ENG | |
| 155 | Area11: C | *ENG | |
| 156 | Area12: C | *ENG | |
| 183 | Area0: Y | *ENG | |
| 184 | Area1: Y | *ENG | Adjusts the area magnification for LD 0.<br>[–256 to 255 / **0** / 1 sub-dot/step] |
| 185 | Area2: Y | *ENG | |
| 186 | Area3: Y | *ENG | |
| 187 | Area4: Y | *ENG | |
| 188 | Area5: Y | *ENG | |
| 189 | Area6: Y | *ENG | |
| 190 | Area7: Y | *ENG | |
| 191 | Area8: Y | *ENG | |
| 192 | Area9: Y | *ENG | Not used |
| 193 | Area10: Y | *ENG | |
| 194 | Area11: Y | *ENG | |
| 195 | Area12: Y | *ENG | |
| 196 | Area0: Y | *ENG | |

| | | | |
|---|---|---|---|
| 197 | Area1: Y | *ENG | Adjusts the area magnification for LD 1.<br>[–256 to 255 / **0** / 1 sub-dot/step] |
| 198 | Area2: Y | *ENG | |
| 199 | Area3: Y | *ENG | |
| 200 | Area4: Y | *ENG | |
| 201 | Area5: Y | *ENG | |
| 202 | Area6: Y | *ENG | |
| 203 | Area7: Y | *ENG | |
| 204 | Area8: Y | *ENG | |
| 205 | Area9: Y | *ENG | Not used |
| 206 | Area10: Y | *ENG | |
| 207 | Area11: Y | *ENG | |
| 208 | Area12: Y | *ENG | |

| | | | |
|---|---|---|---|
| **2152** | **[Area Shad. Correct. Setting] FA** | | |
| | Adjusts the area correction value for each LD power.<br>The main scan is divided into 16 areas. However, the image areas are limited from area 1 to area 14.<br>For BK and Magenta, area 1 is at the rear side of the machine (left side of the image) and area 14 is at the front side of the machine (right side of the image).<br>For Cyan and Yellow, area 1 is at the front side of the machine (right side of the image) and area 14 is at the rear side of the machine (left side of the image). | | |
| 001 | Area 0: Bk | *ENG | This is for the synchronizing detection board.<br>[50 to 150 / **100** / 1 %/step] |
| 002 | Area 1: Bk | *ENG | |
| 003 | Area 2: Bk | *ENG | |
| 004 | Area 3: Bk | *ENG | |
| 005 | Area 4: Bk | *ENG | |
| 006 | Area 5: Bk | *ENG | |
| 007 | Area 6: Bk | *ENG | |
| 008 | Area 7: Bk | *ENG | |
| 009 | Area 8: Bk | *ENG | |
| 010 | Area 9: Bk | *ENG | |
| 011 | Area 10: Bk | *ENG | |
| 012 | Area 11: Bk | *ENG | |
| 013 | Area 12: Bk | *ENG | |
| 014 | Area 13: Bk | *ENG | |
| 015 | Area 14: Bk | *ENG | |

| | | | |
|---|---|---|---|
| 016 | Area 15: Bk | *ENG | This is out of the image area.<br>[50 to 150 / **100** / 1 %/step] |
| 033 | Area 0: M | *ENG | This is for the synchronizing detection board. |
| 034 | Area 1: M | *ENG | [50 to 150 / **100** / 1 %/step] |
| 035 | Area 2: M | *ENG | |
| 036 | Area 3: M | *ENG | |
| 037 | Area 4: M | *ENG | |
| 038 | Area 5: M | *ENG | |
| 039 | Area 6: M | *ENG | |
| 040 | Area 7: M | *ENG | |
| 041 | Area 8: M | *ENG | |
| 042 | Area 9: M | *ENG | |
| 043 | Area 10: M | *ENG | |
| 044 | Area 11: M | *ENG | |
| 045 | Area 12: M | *ENG | |
| 046 | Area 13: M | *ENG | |
| 047 | Area 14: M | *ENG | |
| 048 | Area 15: M | *ENG | This is out of the image area.<br>[50 to 150 / **100** / 1 %/step] |
| 065 | Area 0: C | *ENG | This is for the synchronizing detection board.<br>[50 to 150 / **100** / 1 %/step] |

| | | | |
|---|---|---|---|
| 066 | Area 1: C | *ENG | [50 to 150 / **100** / 1 %/step] |
| 067 | Area 2: C | *ENG | |
| 068 | Area 3: C | *ENG | |
| 069 | Area 4: C | *ENG | |
| 070 | Area 5: C | *ENG | |
| 071 | Area 6: C | *ENG | |
| 072 | Area 7: C | *ENG | |
| 073 | Area 8: C | *ENG | |
| 074 | Area 9: C | *ENG | |
| 075 | Area 10: C | *ENG | |
| 076 | Area 11: C | *ENG | |
| 077 | Area 12: C | *ENG | |
| 078 | Area 13: C | *ENG | |
| 079 | Area 14: C | *ENG | |
| 080 | Area 15: C | *ENG | This is out of the image area.<br>[50 to 150 / **100** / 1 %/step] |
| 097 | Area 0: Y | *ENG | This is for the synchronizing detection board.<br>[50 to 150 / **100** / 1 %/step] |

| | | | |
|---|---|---|---|
| 098 | Area 1: Y | *ENG | [50 to 150 / **100** / 1 %/step] |
| 099 | Area 2: Y | *ENG | |
| 100 | Area 3: Y | *ENG | |
| 101 | Area 4: Y | *ENG | |
| 102 | Area 5: Y | *ENG | |
| 103 | Area 6: Y | *ENG | |
| 104 | Area 7: Y | *ENG | |
| 105 | Area 8: Y | *ENG | |
| 106 | Area 9: Y | *ENG | |
| 107 | Area 10: Y | *ENG | |
| 108 | Area 11: Y | *ENG | |
| 109 | Area 12: Y | *ENG | |
| 110 | Area 13: Y | *ENG | |
| 111 | Area 14: Y | *ENG | |
| 112 | Area 15: Y | *ENG | This is out of the image area. |

| **2160** | **[Vertical Line Width] DFU** | | |
|---|---|---|---|
| 001 | 600dpi:Bk | *ENG | [10 to 15 / **15** / 1 /step] |
| 002 | 600dpi:Ma | *ENG | |
| 003 | 600dpi:Cy | *ENG | |
| 004 | 600dpi:Ye | *ENG | |
| 005 | 1200dpi:Bk | *ENG | |
| 006 | 1200dpi:Ma | *ENG | |
| 007 | 1200dpi:Cy | *ENG | |
| 008 | 1200dpi:Ye | *ENG | |

| **2180** | **[Line Position Adj. Setting Clear]** | | |
|---|---|---|---|
| 001 | Color Regist. | - | **DFU** |
| 002 | Main Scan Length Detection | - | |
| 003 | MUSIC Result | - | |
| 004 | Area Magnification Correction | - | |

| **2181** | **[Line Position Adj. Result]** | | |
|---|---|---|---|
| | Displays the values for each correction.<br>▪ "Paper Int. Mag: Subdot" indicates the magnification correction value between two sheets of paper.<br>▪ "Mag.Cor. Subdot" indicates the magnification correction value.<br>▪ "M. Scan Erro." indicates the shift correction value in the main scan direction.<br>▪ "S. Scan Erro." Indicates the shift correction value in the sub scan direction.<br>▪ "M. Cor.: Dot" indicates the dot correction value in the main scan direction.<br>▪ "M. Cor.: Subdot" indicates the sub dot correction value in the main scan direction.<br>▪ Bk: Black, M: Magenta, C: Cyan, Y: Yellow | | |
| 001 | Paper Int. Mag: Subdot: Bk | *ENG | [–32768 to 32767 / **0** / 1 pulse/step] |
| 002 | Mag.Cor. Subdot: Bk | *ENG | [–32768 to 32767 / **0** / 1 pulse/step] |
| 003 | Skew: M | *ENG | [–5000 to 5000 / **0** / 0.001 um/step] |
| 004 | Bent: M | *ENG | |
| 005 | M. Scan Erro.: Left: M | *ENG | |
| 006 | M. Scan Erro.: Center: M | *ENG | |

| | | | |
|---|---|---|---|
| 007 | M. Scan Erro.: Right: M | *ENG | |
| 008 | S. Scan Erro.: Left: M | *ENG | |
| 009 | S. Scan Erro.: Center: M | *ENG | |
| 010 | S. Scan Erro.: Right: M | *ENG | |
| 011 | M. Cor.: Dot: M | *ENG | [–512 to 511 / **0** / 1 dot/step] |
| 012 | M. Cor.: Subdot: M | *ENG | [–15 to 15 / **0** / 1 pulse/step] |
| 013 | Paper Int. Mag: Subdot: M | *ENG | [–32768 to 32767 / 0 / 1 pulse/step] |
| 014 | Mag.Cor. Subdot: M | *ENG | |
| 015 | M. Left Mag.: Subdot: M | *ENG | |
| 016 | M. Right Mag.: Subdot: M | *ENG | |
| 017 | S. Cor.: 600 Line: M | *ENG | [–16384 to 16383 / **0** / 1 line/step] |
| 018 | S. Cor.: 600 Sub: M | *ENG | [–1 to 1 / **0** / 0.001 line/step] |
| 019 | S. Cor.: 1200 Line: M | *ENG | [–16384 to 16383 / **0** / 1 line/step] |
| 020 | S. Cor.: 1200 Sub: M | *ENG | [–1 to 1 / **0** / 0.001 line/step] |
| 021 | Skew: C | *ENG | [–5000 to 5000 / **0** / 0.001 um/step] |
| 022 | Bent: C | *ENG | |
| 023 | M. Scan Erro.: Left: C | *ENG | |
| 024 | M. Scan Erro.: Center: C | *ENG | |
| 025 | M. Scan Erro.: Right: C | *ENG | |
| 026 | S. Scan Erro.: Left: C | *ENG | |
| 027 | S. Scan Erro.: Center: C | *ENG | |
| 028 | S. Scan Erro.: Right: C | *ENG | |

| | | | |
|---|---|---|---|
| 029 | M. Cor.: Dot: C | *ENG | [–512 to 511 / **0** / 1 dot/step] |
| 030 | M. Cor.: Subdot: C | *ENG | [–15 to 15 / **0** / 1 pulse/step] |
| 031 | Paper Int. Mag: Subdot: C | *ENG | [–32768 to 32767 / **0** / 1 pulse/step] |
| 032 | Mag.Cor. Subdot: C | *ENG | |
| 033 | M. Left Mag.: Subdot: C | *ENG | |
| 034 | M. Right Mag.: Subdot: C | *ENG | |
| 035 | S. Cor.: 600 Line: C | *ENG | [–16384 to 16383 / **0** / 1 line/step] |
| 036 | S. Cor.: 600 Sub: C | *ENG | [–1 to 1 / **0** / 0.001 line/step] |
| 037 | S. Cor.: 1200 Line: C | *ENG | [–16384 to 16383 / **0** / 1 line/step] |
| 038 | S. Cor.: 1200 Sub: C | *ENG | [–1 to 1 / **0** / 0.001 line/step] |
| 039 | Skew: Y | *ENG | [–5000 to 5000 / **0** / 0.001 um/step] |
| 040 | Bent: Y | *ENG | |
| 041 | M. Scan Erro.: Left: Y | *ENG | |
| 042 | M. Scan Erro.: Center: Y | *ENG | |
| 043 | M. Scan Erro.: Right: Y | *ENG | |
| 044 | S. Scan Erro.: Left: Y | *ENG | |
| 045 | S. Scan Erro.: Center: Y | *ENG | |
| 046 | S. Scan Erro.: Right: Y | *ENG | |
| 047 | M. Cor.: Dot: Y | *ENG | [–512 to 511 / **0** / 1 dot/step] |
| 048 | M. Cor.: Subdot: Y | *ENG | [–15 to 15 / **0** / 1 pulse/step] |

| | | | |
|---|---|---|---|
| 049 | Paper Int. Mag: Subdot: Y | *ENG | [–32768 to 32767 / **0** / 1 pulse/step] |
| 050 | Mag.Cor. Subdot: Y | *ENG | |
| 051 | M. Left Mag.: Subdot: Y | *ENG | |
| 052 | M. Right Mag.: Subdot: Y | *ENG | |
| 053 | S. Cor.: 600 Line: Y | *ENG | [–16384 to 16383 / **0** / 1 line/step] |
| 054 | S. Cor.: 600 Sub: Y | *ENG | [–1 to 1 / **0** / 0.001 line/step] |
| 055 | S. Cor.: 1200 Line: Y | *ENG | [–16384 to 16383 / **0** / 1 line/step] |
| 056 | S. Cor.: 1200 Sub: Y | *ENG | [–1 to 1 / **0** / 0.001 line/step] |

| | | | |
|---|---|---|---|
| **2182** | **[Line Position Adj. Offset]**<br>(Color) M. Scan: Main scan, S. Scan: Sub-scan<br>High: 154 mm/sec, Medium: 111 mm/sec, Low: 77 mm/sec | | |
| 001 | M Magnification | *ENG | Adjusts the line position manually.<br>[-1 to 1 / **0** / 0.001%/step]<br>When line shifts are not corrected by the automatic line position adjustment, do this SP.<br>Increasing a value reduces the image in the main scan direction.<br>Decreasing a value enlarges the image in the main scan direction. |
| 002 | C Magnification | *ENG | |
| 003 | Y Magnification | *ENG | |
| 004 | M. Scan: High: Dot: M | *ENG | [-512 to 511 / **0** / 1 dot/step] |
| 005 | M. Scan: High: Subdot: M | *ENG | [-15 to 15 / **0** / 1 pulse/step] |
| 006 | M. Scan: Medium: Dot: M | *ENG | [-512 to 511 / **0** / 1 dot/step] |
| 007 | M. Scan: Medium: Subdot: M | *ENG | [-15 to 15 / **0** / 1 pulse/step] |

| | | | |
|---|---|---|---|
| 008 | M. Scan: Low: Dot: M | *ENG | [-512 to 511 / **0** / 1 dot/step] |
| 009 | M. Scan: Low: Subdot: M | *ENG | [-15 to 15 / **0** / 1 pulse/step] |
| 010 | M. Scan: High: Dot: C | *ENG | [-512 to 511 / **0** / 1 dot/step] |
| 011 | M. Scan: High: Subdot: C | *ENG | [-15 to 15 / **0** / 1 pulse/step] |
| 012 | M. Scan: Medium: Dot: C | *ENG | [-512 to 511 / **0** / 1 dot/step] |
| 013 | M. Scan: Medium: Subdot: C | *ENG | [-15 to 15 / **0** / 1 pulse/step] |
| 014 | M. Scan: Low: Dot: C | *ENG | [-512 to 511 / **0** / 1 dot/step] |
| 015 | M. Scan: Low: Subdot: C | *ENG | [-15 to 15 / **0** / 1 pulse/step] |
| 016 | M. Scan: High: Dot: Y | *ENG | [-512 to 511 / **0** / 1 dot/step] |
| 017 | M. Scan: High: Subdot: Y | *ENG | [-15 to 15 / **0** / 1 pulse/step] |
| 018 | M. Scan: Medium: Dot: Y | *ENG | [-512 to 511 / **0** / 1 dot/step] |
| 019 | M. Scan: Medium: Subdot: Y | *ENG | [-15 to 15 / **0** / 1 pulse/step] |
| 020 | M. Scan: Low: Dot: Y | *ENG | [-512 to 511 / **0** / 1 dot/step] |
| 021 | M. Scan: Low: Subdot: Y | *ENG | [-15 to 15 / **0** / 1 pulse/step] |
| 022 | S. Scan: High: Line: M | *ENG | [-16384 to 16383 / **0** / 1 line/step] |
| 023 | S. Scan: High: Subline: M | *ENG | [–1 to 1 / **0** / 0.001 /line] |
| 024 | S. Scan: Medium: Line: M | *ENG | [-16384 to 16383 / **0** / 1 line/step] |
| 025 | S. Scan: Medium: Subline: M | *ENG | [–1 to 1 / **0** / 0.001 /line] |
| 026 | S. Scan: Low: Line: M | *ENG | [-16384 to 16383 / **0** / 1 line/step] |
| 027 | S. Scan: Low: Subline: M | *ENG | Not used |
| 028 | S. Scan: High: Line: C | *ENG | [-16384 to 16383 / **0** / 1 line/step] |
| 029 | S. Scan: High: Subline: C | *ENG | [–1 to 1 / **0** / 0.001 /line] |

| | | | |
|---|---|---|---|
| 030 | S. Scan: Medium: Line: C | *ENG | [-16384 to 16383 / **0** / 1 line/step] |
| 031 | S. Scan: Medium: Subline: C | *ENG | [–1 to 1 / **0** / 0.001 /line] |
| 032 | S. Scan: Low: Line: C | *ENG | [-16384 to 16383 / **0** / 1 line/step] |
| 033 | S. Scan: Low: Subline: C | *ENG | Not used |
| 034 | S. Scan: High: Line: Y | *ENG | [-16384 to 16383 / **0** / 1 line/step] |
| 035 | S. Scan: High: Subline: Y | *ENG | [–1 to 1 / **0** / 0.001 /line] |
| 036 | S. Scan: Medium: Line: Y | *ENG | [-16384 to 16383 / **0** / 1 line/step] |
| 037 | S. Scan: Medium: Subline: Y | *ENG | [–1 to 1 / **0** / 0.001 /line] |
| 038 | S. Scan: Low: Line: Y | *ENG | [-16384 to 16383 / **0** / 1 line/step] |
| 039 | S. Scan: Low: Subline: Y | *ENG | Not used |

| **2183** | **[Main Scan Length Detection] DFU** | | |
|---|---|---|---|
| 001 | Execute: High: Bk | - | Executes the adjustment for the main scan length detection manually. |
| 002 | Execute: Medium: Bk | - | |
| 003 | Execute: Low: Bk | - | |
| 004 | Execute: High: M | - | |
| 005 | Execute: Medium: M | - | |
| 006 | Execute: Low: M | - | |
| 007 | Execute: High: C | - | |
| 008 | Execute: Medium: C | - | |

| | | | |
|---|---|---|---|
| 009 | Execute: Low: C | - | |
| 010 | Execute: High: Y | - | |
| 011 | Execute: Medium: Y | - | |
| 012 | Execute: Low: Y | - | |

| **2184** | **[Main Scan Length Detection Target] DFU** | | |
|---|---|---|---|
| 001 | Execute: Bk | - | Executes the target value for the main scan length detection. |
| 002 | Execute: M | - | |
| 003 | Execute: C | - | |
| 004 | Execute: Y | - | |

| | | | |
|---|---|---|---|
| **2185** | **[Main Scan Length Detection Disp.]** | | |
| | Displays/adjusts the target value for the main scan magnification correction of the line position adjustment.<br>After replacing the laser optics housing unit, input the standard value for Bk provided with the new unit. For details, see “Laser Optics Housing Unit” in the "Replacement Adjustment" section. It is not necessary to input the values for the other colors; these are automatically adjusted after doing the line position adjustment. | | |
| 001 | Bk | *ENG | [0 to 266667 / **249449** / 1 sub-dot/step] |
| 002 | M | *ENG | |
| 003 | C | *ENG | |
| 004 | Y | *ENG | |

| | | | |
|---|---|---|---|
| **2186** | **[Main Scan Length Detection] DFU** | | |
| 001 | Selection | *ENG | [0 or 1 / **1** / 1/step]<br>0: OFF, 1: ON |
| | Enables or disables the main scan length detection for the laser. | | |
| 002 | Paper Interval | *ENG | [0 to 999 / **1** / 1 sec/step] |
| | Adjusts the interval of the main scan length detection for the laser. | | |

| **2190** | **[Line Position Adj.]** | | |
|---|---|---|---|
| 001 | Paper Int. Mag.: Subdot: Bk | *ENG | **DFU**<br>[0 or 1 / **1** / 1/step] |
| 002 | Paper Int. Mag.: Subdot: M | *ENG | |
| 003 | Paper Int. Mag.: Subdot: C | *ENG | |
| 004 | Paper Int. Mag.: Subdot: Y | *ENG | |
| 005 | M. Scan Mag.: Subdot: M | *ENG | **DFU**<br>[0 or 1 / **1** / 1/step]<br>0: Disable correction<br>1: Enable correction |
| 006 | M. Scan Mag.: Subdot: C | *ENG | |
| 007 | M. Scan Mag.: Subdot: Y | *ENG | |
| 008 | Area Mag.: Subdot: M | *ENG | **DFU**<br>[0 or 1 / **1** / 1/step] |
| 009 | Area Mag.: Subdot: C | *ENG | |
| 010 | Area Mag.: Subdot: Y | *ENG | |
| 011 | S. Scan Cor. Setting | *ENG | **DFU**<br>[0 or 1 / **0** / 1/step]<br>0: Adjusted with Bk<br>1: Adjusted in minimum shift among four colors |
| 012 | 1 Line Shift Control | *ENG | **DFU**<br>[0 or 1 / **0** / 1/step] |

| | | | |
|---|---|---|---|
| **2191** | **[MUSIC Coefficient Setting]** Line Position Adjustment: Coefficient Setting<br>**DFU**<br>ch 0: ID sensor at rear, ch 1: ID sensor at center, ch 2: ID sensor at front | | |
| 001 | ch 0: Filter: Front: a1 | *ENG | [–131071 to 131071 / **125869** / 1 bit/step] |
| 002 | ch 0: Filter: Front: a2 | *ENG | [–131071 to 131071 / **–60488** / 1 bit/step] |
| 003 | ch 0: Filter: Front: b0 | *ENG | [–131071 to 131071 / **39** / 1 bit/step] |
| 004 | ch 0: Filter: Front: b1 | *ENG | [–131071 to 131071 / **77** / 1 bit/step] |
| 005 | ch 0: Filter: Front: b2 | *ENG | [–131071 to 131071 / **39** / 1 bit/step] |
| 006 | ch 0: Filter: Rear: a1 | *ENG | [–131071 to 131071 / **128596** / 1 bit/step] |
| 007 | ch 0: Filter: Rear: a2 | *ENG | [–131071 to 131071 / **–63398** / 1 bit/step] |
| 008 | ch 0: Filter: Rear: b0 | *ENG | [–131071 to 131071 / **84** / 1 bit/step] |
| 009 | ch 0: Filter: Rear: b1 | *ENG | [–131071 to 131071 / **168** / 1 bit/step] |
| 010 | ch 0: Filter: Rear: b2 | *ENG | [–131071 to 131071 / **84** / 1 bit/step] |
| 011 | ch 1: Filter: Front: a1 | *ENG | [–131071 to 131071 / **125869** / 1 bit/step] |
| 012 | ch 1: Filter: Front: a2 | *ENG | [–131071 to 131071 / **–60488** / 1 bit/step] |
| 013 | ch 1: Filter: Front: b0 | *ENG | [–131071 to 131071 / **39** / 1 bit/step] |
| 014 | ch 1: Filter: Front: b1 | *ENG | [–131071 to 131071 / **77** / 1 bit/step] |
| 015 | ch 1: Filter: Front: b2 | *ENG | [–131071 to 131071 / **39** / 1 bit/step] |
| 016 | ch 1: Filter: Rear: a1 | *ENG | [–131071 to 131071 / **128596** / 1 bit/step] |
| 017 | ch 1: Filter: Rear: a2 | *ENG | [–131071 to 131071 / **–63398** / 1 bit/step] |
| 018 | ch 1: Filter: Rear: b0 | *ENG | [–131071 to 131071 / **84** / 1 bit/step] |
| 019 | ch 1: Filter: Rear: b1 | *ENG | [–131071 to 131071 / **168** / 1 bit/step] |

| | | | |
|---|---|---|---|
| 020 | ch 1: Filter: Rear: b2 | *ENG | [–131071 to 131071 / **84** / 1 bit/step] |
| 021 | ch 2: Filter: Front: a1 | *ENG | [–131071 to 131071 / **125869** / 1 bit/step] |
| 022 | ch 2: Filter: Front: a2 | *ENG | [–131071 to 131071 / **–60488** / 1 bit/step] |
| 023 | ch 2: Filter: Front: b0 | *ENG | [–131071 to 131071 / **39** / 1 bit/step] |
| 024 | ch 2: Filter: Front: b1 | *ENG | [–131071 to 131071 / **77** / 1 bit/step] |
| 025 | ch 2: Filter: Front: b2 | *ENG | [–131071 to 131071 / **39** / 1 bit/step] |
| 026 | ch 2: Filter: Rear: a1 | *ENG | [–131071 to 131071 / **128596** / 1 bit/step] |
| 027 | ch 2: Filter: Rear: a2 | *ENG | [–131071 to 131071 / **–63398** / 1 bit/step] |
| 028 | ch 2: Filter: Rear: b0 | *ENG | [–131071 to 131071 / **84** / 1 bit/step] |
| 029 | ch 2: Filter: Rear: b1 | *ENG | [–131071 to 131071 / **168** / 1 bit/step] |
| 030 | ch 2: Filter: Rear: b2 | *ENG | [–131071 to 131071 / **84** / 1 bit/step] |
| 031 | Q Format Selection | *ENG | [0 to 3 / **3** / 1/step] |

| **2192** | **[MUSIC Threshold Setting]** Line Position Adjustment: Threshold Setting **DFU** ch 0: ID sensor at rear, ch 1: ID sensor at center, ch 2: ID sensor at front | | |
|---|---|---|---|
| 001 | ch 0: 1st | *ENG | [0.5 to 3 / **1.2** / 0.1 V/step] |
| 002 | ch 0: 2nd | *ENG | |
| 003 | ch 0: 3rd | *ENG | |
| 004 | ch 0: 4th | *ENG | |
| 005 | ch 1: 1st | *ENG | |
| 006 | ch 1: 2nd | *ENG | |
| 007 | ch 1: 3rd | *ENG | |
| 008 | ch 1: 4th | *ENG | |
| 009 | ch 2: 1st | *ENG | |
| 010 | ch 2: 2nd | *ENG | |
| 011 | ch 2: 3rd | *ENG | |
| 012 | ch 2: 4th | *ENG | |

| **2193** | **[MUSIC Condition Set]** Line Position Adjustment: Condition Setting | | |
|---|---|---|---|
| 001 | Auto Execution | *ENG | [0 or 1 / **1** / 1 ]<br>0: OFF, 1: ON |
| | Enables/disables the automatic line position adjustment | | |
| 002 | Page: Job End: BW+FC | *ENG | [0 to 999 / **500** / 1 page/step] |
| | Adjusts the threshold of the line position adjustment for BW and color printing mode after job end. | | |
| 003 | Page: Job End: FC | *ENG | [0 to 999 / **200** / 1 page/step] |
| | Adjusts the threshold of the line position adjustment for color printing mode after job end. | | |
| 004 | Page: Interrupt: BW+FC | *ENG | [0 to 999 / **200** / 1 page/step] |
| | Adjusts the threshold of the line position adjustment for BW and color printing mode during job. | | |
| 005 | Page: Interrupt: FC | *ENG | [0 to 999 / **200** / 1 page/step] |
| | Adjusts the threshold of the line position adjustment for color printing mode during jobs. | | |
| 006 | Page: Stand-By: BW | *ENG | [0 to 999 / **100** / 1 page/step] |
| | Adjusts the threshold of the line position adjustment for BW printing mode in stand-by mode. The line position adjustment is done when the number of outputs in BW printing mode reaches the value specified with this SP and the condition of SP2-193-008 or SP2-193-009 is satisfied. | | |

| | | | |
|---|---|---|---|
| 007 | Page: Stand-By: FC | *ENG | [0 to 999 / **100** / 1 page/step] |
| | Adjusts the threshold of the line position adjustment for BW printing mode in stand-by mode. The line position adjustment is done when the number of outputs in color printing mode reaches the value specified with this SP and the condition of SP2-193-008 or SP2-193-009 is satisfied. | | |
| 008 | Temp. | *ENG | [0 to 100 / **5** / 1deg/step] |
| | Adjust the temperature change threshold for the line position adjustment (Mode b: adjustment once). The timing for line position adjustment depends on the combinations of several conditions. Section Descriptions" section. | | |
| 009 | Time | *ENG | [1 to 1440 / **300** / 1 minute/step] |
| | Adjust the time threshold for the line position adjustment (Mode b: adjustment once). The timing for line position adjustment depends on the combinations of several conditions. | | |
| 010 | Magnification | *ENG | [0 to 10 / **1** / 0.01%/step] |
| | Adjusts the magnification threshold for line position adjustment. If the length of the main scan is changed by this amount since the previous MUSIC, then MSUIC is done again. | | |
| 011 | Temp. 2 | *ENG | [0 to 100 / **10** / 1deg/step] |
| | Adjust the temperature change threshold for the line position adjustment (Mode a: adjustment twice). The timing for line position adjustment depends on the combinations of several conditions. | | |
| 012 | Time 2 | *ENG | [1 to 9999 / **600** / 1 minute/step] |
| | Adjust the time threshold for the line position adjustment (Mode a: adjustment twice). The timing for line position adjustment depends on the combinations of several conditions. | | |
| 013 | Page: Power ON:BW+FC | *ENG | [0 to 999 / **200** / 1 page/step] |

| **2194** | **[MUSIC Execution Result]** Line Position Adjustment: Execution Result | | |
|---|---|---|---|
| 001 | Year | *ENG | [0 to 99 / **0** / 1 year/step] |
| 002 | Month | *ENG | [1 to 12 / **1** / 1 month/step] |
| 003 | Day | *ENG | [1 to 31 / **1** / 1 day/step] |
| 004 | Hour | *ENG | [0 to 23 / **0** / 1 hour/step] |
| 005 | Minute | *ENG | [0 to 59 / **0** / 1 minute/step] |
| 006 | Temperature | *ENG | [0 to 100 / **0** / 1 deg/step] |
| 007 | Execution Result | *ENG | [0 or 1 / **0** / 1 /step]<br>0: Completed successfully, 1: Failed |
| 008 | Number of Execution | *ENG | [0 to 999999 / **0** / 1 times/step] |
| 009 | Number of Failure | *ENG | [0 to 999999 / **0** / 1 times/step] |
| 010 | Error Result: M | *ENG | [0 to 9 / **0** / 1 /step]<br>0: Not done<br>1: Completed successfully<br>2: Cannot detect patterns<br>3: Fewer lines on the pattern than the target<br>4: Not used<br>5: Out of the adjustment range<br>6 to 9: Not used |
| 011 | Error Result: C | *ENG | |
| 012 | Error Result: Y | *ENG | |

| | | | |
|---|---|---|---|
| **2197** | **[MUSIC Start Time]** | | |
| | **DFU** | | |
| 001 | MUSIC Start Time (EDT) | *ENG | [10 to 40 / **20** / 10ms/step] |
| 002 | TM Sensor Position | *ENG | [50 to 500 / **105.5** / 0.1mm/step] |

| | | | |
|---|---|---|---|
| **2198** | **[Music A/D Interval]** | | |
| | **ADC Trigger Counter** | | |
| 001 | ADC Trigger Counter | *ENG | [7.5 to 20 / **10** / 0.1 μs/step] |

| | | | |
|---|---|---|---|
| **2199** | **[Music Error Time Setting]** | | |
| | **DFU** | | |
| 001 | Error Detection Counter | *ENG | [0.5 to 4 / **2.5** / 0.1 sec /step] |

| | | | |
|---|---|---|---|
| **2221** | **[LD Power] LD Power Control** | | |
| | Adjusts the fixed LD power for each line speed and color.<br>These SPs are activated only when SP3-041-002 is set to "0".<br>Plain: 154 mm/sec, Thick 1 and Thick 2&Fine: 77 mm/sec | | |
| 001 | Plain: Bk | *ENG | [0 to 200 / **100** / 1%/step]<br>Increasing this value makes the image density darker. |
| 002 | Plain: M | *ENG | |
| 003 | Plain: C | *ENG | |
| 004 | Plain: Y | *ENG | |
| 005 | Thick 1: Bk | *ENG | |
| 008 | Thick 1: Y | *ENG | |
| 009 | Thick 2&FINE: Bk | *ENG | |
| 010 | Thick 2&FINE: M | *ENG | |
| 011 | Thick 2&FINE: C | *ENG | |
| 012 | Thick 2&FINE: Y | *ENG | |

| | | | |
|---|---|---|---|
| **2229** | **[Development DC Vias]** Development DC Bias Adjustment | | |
| | Adjusts the development bias.<br>Development bias is automatically adjusted during process control; therefore, adjusting these settings has no effect while Process Control (SP3-041-001 Default: ON) is activated.<br>After deactivating Process Control with SP3-041-001, the values in these SP modes are used for printing.<br>Plain: 154 mm/sec, Thick 1 and Thick 2&Fine: 77 mm/sec | | |
| 001 | Plain: Bk | *ENG | [0 to 800 / **550** / 10 –V/step] |
| 002 | Plain: M | *ENG | |
| 003 | Plain: C | *ENG | |
| 004 | Plain: Y | *ENG | |
| 005 | Thick 1: Bk | *ENG | |
| 006 | Thick 1: M | *ENG | |
| 007 | Thick 1: C | *ENG | |
| 008 | Thick 1: Y | *ENG | |
| 009 | Thick 2: Bk | *ENG | |
| 010 | Thick 2: M | *ENG | |
| 011 | Thick 2: C | *ENG | |
| 012 | Thick 2: Y | *ENG | |
| 013 | Fine: Bk | *ENG | |
| 014 | Fine: M | *ENG | |
| 015 | Fine: C | *ENG | |
| 016 | Fine: Y | *ENG | |

| | | | |
|---|---|---|---|
| **2241** | **[Temperature/Humidity: Display]** | | |
| | Displays the environment temperature and humidity. | | |
| 001 | Temperature | - | [–1280 to 1270 / - / 0.1deg/step] |
| 002 | Relative Humidity | - | [0 to 1000 / - / 0.1 %RH/step] |
| 003 | Absolute Humidity | - | [0 to 100 / - / 0.01 g/m$^3$/step] |

| | | | |
|---|---|---|---|
| **2302** | **[Environmental Correction: Transfer]**<br>Environmental Correction: Image Transfer Belt Unit | | |
| 001 | Current Environmental Display | *ENG | [0 to 0 / 0 / 0 /step] |
| 002 | Forced Setting | *ENG | [0 to 6 / **0** / 1 /step] |
| | Sets the environment condition manually.<br>0: Automatic environment control<br>1: LL (Low temperature/ Low humidity)<br>2: ML (Middle temperature/ Low humidity)<br>3: MM (Middle temperature/ Middle humidity)<br>4: MH (Middle temperature/ High humidity)<br>5: HH (High temperature/ High humidity) | | |
| 003 | Absolute Humidity: Threshold 1 | *ENG | [0 to 100 / **4** / 0.01 g/m$^3$/step] |
| | Adjusts the threshold value between LL and ML. | | |
| 004 | Absolute Humidity: Threshold 2 | *ENG | [0 to 100 / **8** / 0.01 g/m$^3$/step] |
| | Adjusts the threshold value between ML and MM. | | |
| 005 | Absolute Humidity: Threshold 3 | *ENG | [0 to 100 / **16** / 0.01 g/m$^3$/step] |
| | Adjusts the threshold value between MM and MH. | | |

| | | | |
|---|---|---|---|
| 006 | Absolute Humidity: Threshold 4 | *ENG | [0 to 100 / **24** / 0.01 g/m$^3$/step] |
| | Adjusts the threshold value between MH and HH. | | |
| 007 | Temp Threshold | *ENG | [–5 to 30 / **5** / 1 deg/step] |

| | | | |
|---|---|---|---|
| **2308** | **[Paper Size Correction]** | | |
| | Adjusts the threshold value for the paper size correction. | | |
| 001 | Threshold 1 | *ENG | [0 to 350 / **297** / 1 mm/step]<br>Threshold 1 ≤ paper:<br>Paper is detected as "S1" size. |
| 002 | Threshold 2 | *ENG | [0 to 350 / **257** / 1 mm/step]<br>Threshold 2 ≤ paper ≤ Threshold 1:<br>Paper is detected as "S2" size. |
| 003 | Threshold 3 | *ENG | [0 to 350 / **210** / 1 mm/step]<br>Threshold 3 ≤ paper ≤ Threshold 2:<br>Paper is detected as "S3" size. |
| 004 | Threshold 4 | *ENG | [0 to 350 / **148** / 1 mm/step]<br>Threshold 4 ≤ paper ≤ Threshold 3:<br>Paper is detected as "S4" size.<br>Paper ≤ Threshold 4:<br>Paper is detected as "S5" size. |

| **2311** | **[Non Image Area: Bias]** | | |
|---|---|---|---|
| 001 | Image Transfer | *ENG | Adjusts the bias of the image transfer belt between images. This value is added to the value of the image transfer belt bias.<br>[10 to 250 / **100** / 5 %/step] |
| 002 | Paper Transfer | *ENG | Adjusts the bias of the paper transfer roller between images.<br>[0 to 130 / **5** / 1 –μA/step] |

| **2326** | **[Transfer Roller CL: Bias]** Transfer Roller Cleaning: Bias Adjustment | | |
|---|---|---|---|
| 001 | Positive | *ENG | [0 to 2100 / **500** / 100 V /step] |
| | Adjusts the positive voltage of the paper transfer roller for cleaning the paper transfer roller. | | |
| 002 | Negative | *ENG | [10 to 400 / **300** / 10 %/step] |
| | Adjusts the negative current of the paper transfer roller for cleaning the paper transfer roller. | | |
| 003 | Positive | *ENG | [0 to 2100 / **2000** / 100 V/step] |
| | Adjusts the negative current limit of the paper transfer roller for cleaning the paper transfer roller. | | |
| 004 | Negative | *ENG | [10 to 400 / **100** / 10 %/step] |

| | | | |
|---|---|---|---|
| **2351** | **[Common: BW: Bias]** Image Transfer Belt: B/W: Bias Adjustment<br>Plain: 154 mm/sec, Thick 1 and Thick 2&Fine: 77 mm/sec | | |
| 001 | Image Transfer: Plain | *ENG | [0 to 60 / **25** / 1 μA] |
| | Adjusts the current for the image transfer belt in B/W mode for plain paper. | | |
| 002 | Image Transfer: Thick 1 | *ENG | [0 to 60 / **12** / 1 μA] |
| | Adjusts the current for the image transfer belt in B/W mode for thick 1 paper. | | |

| | | | |
|---|---|---|---|
| **2357** | **[Common: FC: Bias]** Image Transfer Belt: Full Color: Bias Adjustment<br>Plain: 154 mm/sec, Thick 1 and Thick 2&Fine: 77 mm/sec | | |
| 001 | Image Transfer: Plain: Bk | *ENG | [0 to 60 / **22** / 1 μA] |
| | Adjusts the current for the image transfer belt for Black in full color mode for plain paper. | | |
| 002 | Image Transfer:: Plain: M | *ENG | [0 to 60 / **22** / 1 μA] |
| | Adjusts the current for the image transfer belt for Magenta in full color mode for plain paper. | | |
| 003 | Image Transfer: Plain: C | *ENG | [0 to 60 / **25** / 1 μA] |
| | Adjusts the current for the image transfer belt for Cyan in full color mode for plain paper. | | |
| 004 | Image Transfer: Plain: Y | *ENG | [0 to 60 / **28** / 1 μA] |
| | Adjusts the current for the image transfer belt for Yellow in full color mode for plain paper. | | |

| | | | |
|---|---|---|---|
| 005 | Image Transfer: Thick 1: Bk | *ENG | [0 to 60 / **11** / 1 μA] |
| | Adjusts the current for the image transfer belt for Black in full color mode for thick 1 paper. | | |
| 006 | Image Transfer: Thick 1: M | *ENG | [0 to 60 / **11** / 1 μA] |
| | Adjusts the current for the image transfer belt for Magenta in full color mode for thick 1 paper. | | |
| 007 | Image Transfer: Thick 1: C | *ENG | [0 to 60 / **12** / 1 μA] |
| | Adjusts the current for the image transfer belt for Cyan in full color mode for thick 1 paper. | | |
| 008 | Image Transfer: Thick 1: Y | *ENG | [0 to 60 / **14** / 1 μA] |
| | Adjusts the current for the image transfer belt for Yellow in full color mode for thick 1 paper. | | |

| **2360** | **[Common: BW Environment Correction Table]** | | |
|---|---|---|---|
| 001 | Image Transfer: Plain | *ENG | [1 to 60 / **1** / 1 /step] |
| 002 | Image Transfer: Thick 1 | *ENG | |
| 004 | Image Transfer: Plain: Bk | *ENG | [1 to 60 / **31** / 1 /step] |
| 005 | Image Transfer: Plain: M | *ENG | [1 to 60 / **2** / 1 /step] |
| 006 | Image Transfer:: Plain: C | *ENG | |
| 007 | Image Transfer:: Plain: Y | *ENG | |
| 008 | Image Transfer: Thick 1: Bk | *ENG | [1 to 60 / **31** / 1 /step] |
| 009 | Image Transfer: Thick 1: M | *ENG | [1 to 60 / **2** / 1 /step] |
| 010 | Image Transfer: Thick 1: C | *ENG | |
| 011 | Image Transfer: Thick 1: Y | *ENG | |

| | | | |
|---|---|---|---|
| **2401** | **[Plain: Bias]** | | |
| | Adjusts the DC voltage of the discharge plate for plain paper.<br>Plain: 154 mm/sec, Fine: 77 mm/sec | | |
| 001 | Separation DC: Plain: 1st Side | *ENG | [0 to 4000 / **2000** / 10 –V/step] |
| 002 | Separation DC: Plain: 2nd Side | *ENG | [0 to 4000 / **3000** / 10 –V/step] |
| 003 | Separation DC: Plain: 1st Page | *ENG | [0 to 4000 / **2000** / 10 –V/step] |
| 004 | Separation DC: 1200: 2nd side | *ENG | [0 to 4000 / **3000** / 10 –V/step] |

| | | | |
|---|---|---|---|
| **2403** | **[Plain: Bias: BW]** | | |
| | Adjusts the current for the paper transfer roller for plain paper in black-and-white mode.<br>Plain: 154 mm/sec, Fine: 77 mm/sec | | |
| 001 | Paper Transfer: Plain: 1st Side | *ENG | [0 to 250 / **22** / 1 –μA /step] |
| 002 | Paper Transfer: Plain: 2nd Side | *ENG | |
| 003 | Paper Transfer: Plain: 1st Side | *ENG | [0 to 250 / **7** / 1 –μA /step] |
| 004 | Paper Transfer: 1200: 2nd side | *ENG | [0 to 250 / **12** / 1 –μA /step] |

| | | | |
|---|---|---|---|
| **2407** | **[Plain: Bias: FC]** | | |
| | Adjusts the current for the paper transfer roller for plain paper in full color mode.<br>Plain: 154 mm/sec, Fine: 77 mm/sec | | |
| 001 | Paper Transfer: Plain: 1st Side | *ENG | [0 to 250 / **30** / 1 –μA /step] |
| 002 | Paper Transfer: Plain: 2nd Side | *ENG | [0 to 250 / **33** / 1 –μA /step] |
| 003 | Paper Transfer: Plain: 1st Side | *ENG | [0 to 250 / **10** / 1 –μA /step] |
| 004 | Paper Transfer: 1200: 2nd side | *ENG | [0 to 250 / **12** / 1 –μA /step] |

| | | | |
|---|---|---|---|
| **2411** | **[Plain: Paper Size Correction]** | | |
| | Adjusts the size correction coefficient for the paper transfer roller current for each paper size. SP2403 and SP2407 are multiplied by these SP values.<br>Plain: 154 mm/sec, Fine: 77 mm/sec | | |
| 001 | Paper Transfer: Plain :<br>1st Side: S1 | *ENG | [100 to 600 / **100** / 5%/step]<br>S1 size ≥ 297 mm (Paper width) |
| 002 | Paper Transfer: Plain:<br>2nd Side: S1 | *ENG | |
| 003 | Paper Transfer: Plain: 1st Side: S1 | *ENG | |
| 004 | Paper Transfer: 2nd side: 1200: S1 | *ENG | |
| 005 | Paper Transfer: Plain: 1st Side: S2 | *ENG | [100 to 600 / **105** / 5%/step]<br>297 mm ≥ S2 size ≥ 275 mm (Paper width) |

| | | | |
|---|---|---|---|
| 006 | Paper Transfer: Plain: 2nd Side: S2 | *ENG | [100 to 600 / **120** / 5%/step]<br>297 mm ≥ S2 size ≥ 275 mm (Paper width) |
| 007 | Paper Transfer: Plain: 1st Side: S2 | *ENG | [100 to 600 / **120** / 5%/step]<br>297 mm ≥ S2 size ≥ 275 mm (Paper width) |
| 008 | Paper Transfer: 2nd side: 1200: S2 | *ENG | [100 to 600 / **150** / 5%/step] |
| 009 | Paper Transfer: Plain: 1st Side: S3 | *ENG | [100 to 600 / **110** / 5%/step]<br>275 mm ≥ S3 size ≥ 210 mm (Paper width) |
| 010 | Paper Transfer: Plain: 2nd Side: S3 | *ENG | [100 to 600 / **140** / 5%/step]<br>275 mm ≥ S3 size ≥ 210 mm (Paper width) |
| 011 | Paper Transfer: Plain: 1st Side: S3 | *ENG | |
| 012 | Paper Transfer: 2nd side: 1200: S3 | *ENG | [100 to 600 / **300** / 5%/step] |
| 013 | Paper Transfer: Plain: 1st Side: S4 | *ENG | [100 to 600 / **115** / 5%/step]<br>210 mm ≥ S4 size ≥ 148 mm (Paper width) |
| 014 | Paper Transfer: Plain: 2nd Side: S4 | *ENG | [100 to 600 / **160** / 5%/step]<br>210 mm ≥ S4 size ≥ 148 mm (Paper width) |
| 015 | Paper Transfer: Plain: 1st Side: S4 | *ENG | [100 to 600 / **240** / 5%/step]<br>210 mm ≥ S4 size ≥ 148 mm (Paper width) |
| 016 | Paper Transfer: 2nd side: 1200: S44 | *ENG | [100 to 600 / **340** / 5%/step] |

| | | | |
|---|---|---|---|
| 017 | Paper Transfer: Plain: 1st Side: S5 | *ENG | [100 to 600 / **120** / 5%/step]<br>148 mm ≥ S5 size (Paper width) |
| 018 | Paper Transfer: Plain: 2nd Side: S5 | *ENG | [100 to 600 / **180** / 5%/step]<br>148 mm ≥ S5 size (Paper width) |
| 019 | Paper Transfer: Plain: 1st Side: S5 | *ENG | [100 to 600 / **300** / 5%/step]<br>148 mm ≥ S5 size (Paper width) |
| 020 | Paper Transfer: 2nd side: 1200: S5 | *ENG | [100 to 600 / **400** / 5%/step] |

| | | | |
|---|---|---|---|
| **2421** | **[Plain: Leading Edge Correction]** Plain Paper: Leading Edge Correction | | |
| | Adjusts the correction to the paper transfer roller current at the paper leading edge in each mode. SP2403 and SP2407 are multiplied by these SP values.<br>Plain: 154 mm/sec, Fine: 77 mm/sec<br>Note<br>▪ The paper leading edge area can be adjusted with SP2422. | | |
| 001 | Paper Transfer: Plain: 1st Side | *ENG | [0 to 400 / **100** / 5%/step] |
| 002 | Paper Transfer: Plain: 2nd Side | *ENG | [0 to 400 / **100** / 5%/step] |
| 003 | Paper Transfer: Plain: 1st Side | *ENG | [0 to 400 / **100** / 5%/step] |
| 004 | Paper Transfer: 1200: 2nd side | *ENG | |

| | | | |
|---|---|---|---|
| **2421** | Adjusts the correction to the discharge plate current at the paper leading edge in each mode. SP2401 is multiplied by these SPs values.<br>Note<br>▪ The paper leading edge area can be adjusted with SP2422. | | |
| 005 | Separation DC: Plain: 1st Side | *ENG | [0 to 400 / **100** / 5%/step] |
| 006 | Separation DC: Plain: 2nd Side | *ENG | |
| 007 | Separation DC: Plain: 1st Page | *ENG | |
| 008 | Separation DC: 1200: 2nd side | *ENG | |

| | | | |
|---|---|---|---|
| **2422** | **[Plain: Switch Timing: Lead. Edge]** | | |
| | Adjusts the bias/ voltage switch timing of the paper transfer roller/ discharge plate at the paper leading edge between the erase margin area and the image area.<br>Plain: 154 mm/sec, Fine: 77 mm/sec | | |
| 001 | Paper Transfer: Plain: 1st Side | *ENG | [0 to 50 / **0** / 2 mm/step] |
| 002 | Paper Transfer: Plain: 2nd Side | *ENG | |
| 003 | Paper Transfer: Plain: 1st Side | *ENG | |
| 004 | Paper Transfer: 1200: 2nd side | *ENG | |
| 005 | Separation DC: Plain: 1st Page | *ENG | |
| 006 | Separation DC: Plain: 2nd Page | *ENG | |
| 007 | Separation DC: Plain: 1st Page | *ENG | |
| 008 | Separation DC: 1200: 2nd side | *ENG | |

| | | | |
|---|---|---|---|
| **2423** | **[Plain: Trailing Edge Correction]** Plain Paper: Trailing Edge Correction<br>Adjusts the correction coefficient to the paper transfer roller current for the paper trailing edge in each mode. SP2403 and SP2407 are multiplied by these SP values.<br>Plain: 154 mm/sec, Fine: 77 mm/sec<br>Note<br>▪ The paper trailing edge area can be adjusted with SP2424. | | |
| 001 | Paper Transfer: Plain: 1st Side | *ENG | [0 to 400 / **100** / 5%/step] |
| 002 | Paper Transfer: Plain: 2nd Side | *ENG | |
| 003 | Paper Transfer: Plain: 1st Side | *ENG | |
| 004 | Paper Transfer: 1200: 2nd side | *ENG | |
| 005 | Separation DC: Plain: 1st Page | *ENG | |
| 006 | Separation DC: Plain: 2nd Page | *ENG | |
| 007 | Separation DC: Plain: 1st Page | *ENG | |
| 008 | Separation DC: 1200: 2nd side | *ENG | |

| | | | |
|---|---|---|---|
| **2424** | **[Plain: Switch Timing: Trail. Edge]** | | |
| | Adjusts the bias/voltage switch timing of the paper transfer roller/discharge plate at the paper trailing edge between the erase margin area and the image area.<br>Plain: 154 mm/sec, Fine: 77 mm/sec | | |
| 001 | Paper Transfer: Plain: 1st Side | *ENG | [0 to 50 / **0** / 2 mm/step] |
| 002 | Paper Transfer: Plain: 2nd Side | *ENG | |
| 003 | Paper Transfer: Plain: 1st Side | *ENG | |
| 004 | Paper Transfer: 1200: 2nd side | *ENG | |
| 005 | Separation DC: Plain: 1st Page | *ENG | |
| 006 | Separation DC: Plain: 2nd Page | *ENG | |
| 007 | Separation DC: Plain: 1st Page | *ENG | |
| 008 | Separation DC: 1200: 2nd side | *ENG | |

| **2430** | **[Plain: Environment Correction]** | | |
|---|---|---|---|
| 001 | Separation DC: Plain: 1st Page | *ENG | [1 to 60 / **26** / 1 /step] |
| 002 | Separation DC: Plain: 2nd Page | *ENG | [1 to 60 / **32** / 1 /step] |
| 003 | Paper Transfer: BW: 1st Side | *ENG | [1 to 60 / **1** / 1 /step] |
| 004 | Paper Transfer: BW: 2nd Side | *ENG | [1 to 60 / **11** / 1 /step] |
| 005 | Paper Transfer: FC: 1st Side | *ENG | [1 to 60 / **39** / 1 /step] |
| 006 | Paper Transfer: FC: 2nd Side | *ENG | [1 to 60 / **14** / 1 /step] |
| 007 | Separation DC: Plain: 1st Page | *ENG | [1 to 60 / **26** / 1 /step] |
| 008 | Separation DC: 1200: 2nd side | *ENG | [1 to 60 / **32** / 1 /step] |
| 009 | Paper Transfer: 1200: BW: 1st Side | *ENG | [1 to 60 / **11** / 1 /step] |
| 010 | Paper Transfer: 1200: BW: 2 | *ENG | |
| 011 | Paper Transfer: 1200: FC: 1st Side | *ENG | [1 to 60 / **49** / 1 /step] |
| 012 | Paper Transfer: 1200: FC: 2 | *ENG | |

| **2451** | **[Thin: Bias]** | | |
|---|---|---|---|
| | Adjusts the DC voltage of the discharge plate for thin paper.<br>Plain: 154 mm/sec, Fine: 77 mm/sec | | |
| 001 | Separation DC: Plain: 1st Side | *ENG | [0 to 4000 / **2000** / 10 –V/step] |
| 003 | Separation DC: Plain: 1st Page | *ENG | |

| | | | |
|---|---|---|---|
| **2453** | **[Thin: Bias: BW]** | | |
| | Adjusts the current for the paper transfer roller for thin paper in black-and-white mode.<br>Plain: 154 mm/sec, Fine: 77 mm/sec | | |
| 001 | Paper Transfer: Plain: 1st Side | *ENG | [0 to 250 / **22** / 1 –μA /step] |
| 003 | Paper Transfer: Plain: 1st Side | *ENG | [0 to 250 / **11** / 1 –μA /step] |

| | | | |
|---|---|---|---|
| **2457** | **[Thin: Bias: FC]** | | |
| | Adjusts the current for the paper transfer roller for thin paper in full color mode.<br>Plain: 154 mm/sec, Fine: 77 mm/sec | | |
| 001 | Paper Transfer: Plain: 1st Side | *ENG | [0 to 250 / **30** / 1 –μA /step] |
| 003 | Paper Transfer: Plain: 1st Side | *ENG | [0 to 250 / **15** / 1 –μA /step] |

| | | | |
|---|---|---|---|
| **2461** | **[Thin: Paper Size Correction]** | | |
| | Adjusts the size correction coefficient for the paper transfer roller current for each paper size. SP2453 and SP2457 are multiplied by these SP values.<br>Plain: 154 mm/sec, Fine: 77 mm/sec | | |
| 001 | Paper Transfer: Plain: 1st Side: S1 | *ENG | [100 to 600 / **100** / 5%/step]<br>S1 size ≥ 297 mm (Paper width) |
| 005 | Paper Transfer: Plain: 1st Side: S2 | *ENG | [100 to 600 / **120** / 5%/step]<br>297 mm ≥ S2 size ≥ 275 mm (Paper width) |
| 009 | Paper Transfer: Plain: 1st Side | *ENG | [100 to 600 / **140** / 5%/step]<br>297 mm ≥ S2 size ≥ 275 mm (Paper width) |
| 013 | Paper Transfer: Plain: 1st Side: S4 | *ENG | [100 to 600 / **160** / 5%/step]<br>297 mm ≥ S2 size ≥ 275 mm (Pape r width) |
| 017 | Paper Transfer: Plain: 1st Side: S5 | *ENG | [100 to 600 / **180** / 5%/step] |

| | | | |
|---|---|---|---|
| **2471** | **[Thin: Leading Edge Correction]** Thin Paper: Leading Edge Correction | | |
| | Adjusts the correction to the paper transfer roller current at the paper leading edge in each mode. SP2453 and SP2457 are multiplied by these SP values.<br>Plain: 154 mm/sec, Fine: 77 mm/sec<br>Note<br>▪ The paper leading edge area can be adjusted with SP2472. | | |
| 001 | Paper Transfer: Plain: 1st Side | *ENG | [0 to 400 / **100** / 5%/step] |
| 003 | Paper Transfer: Plain: 1st Side | *ENG | |
| 005 | Separation DC: Plain: 1st Side | *ENG | |
| **2471** | Adjusts the correction to the discharge plate current at the paper leading edge in each mode. SP2451 is multiplied by these SP values.<br>Note<br>▪ The paper leading edge area can be adjusted with SP2472. | | |
| 007 | Separation DC: Plain: 1st Side | *ENG | [0 to 400 / **100** / 5%/step] |

| | | | |
|---|---|---|---|
| **2472** | **[Thin: Switch Timing: Lead. Edge]** | | |
| | Adjusts the bias/ voltage switch timing of the paper transfer roller/ discharge plate at the paper leading edge between the erase margin area and the image area.<br>Plain: 154 mm/sec, Fine: 77 mm/sec | | |
| 001 | Paper Transfer: Plain: 1st Side | *ENG | [0 to 50 / **0** / 2 mm/step] |
| 003 | Paper Transfer: Plain: 1st Side | *ENG | |
| 005 | Separation DC: Plain: 1st Page | *ENG | |
| 007 | Separation DC: Plain: 1st Side | *ENG | |

| | | | |
|---|---|---|---|
| **2473** | **[Thin: Trailing Edge Correction]** Thin Paper: Trailing Edge Correction | | |
| | Adjusts the correction coefficient to the paper transfer roller current for the paper trailing edge in each mode. SP2453 and SP2457 are multiplied by these SP values.<br>Plain: 154 mm/sec, Fine: 77 mm/sec<br>Note<br>▪ The paper trailing edge area can be adjusted with SP2474. | | |
| 001 | Paper Transfer: Plain: 1st Side | *ENG | [0 to 400 / **100** / 5%/step] |
| 003 | Paper Transfer: Plain: 1st Side | *ENG | [0 to 400 / **100** / 5%/step] |
| 005 | Separation DC: Plain: 1st Side | *ENG | [0 to 400 / **100** / 5%/step] |
| 007 | Separation DC: Plain: 1st Page | *ENG | [0 to 400 / **100** / 5%/step] |

| | | | |
|---|---|---|---|
| **2474** | **[Thin: Switch Timing: Trail. Edge]** | | |
| | Adjusts the bias/voltage switch timing of the paper transfer roller/discharge plate at the paper trailing edge between the erase margin area and the image area.<br>Plain: 154 mm/sec, Fine: 77 mm/sec | | |
| 001 | Paper Transfer: Plain: 1st Side | *ENG | [0 to 50 / **0** / 2 mm/step] |
| 003 | Paper Transfer: Plain: 1st Side | *ENG | |
| 005 | Separation DC: Plain: 1st Side | *ENG | [0 to 50 / **0** / 1 mm/step] |
| 007 | Separation DC: Plain: 1st Page | *ENG | |

| **2480** | **[Thin: Environment Correction]** | | |
|---|---|---|---|
| 001 | Separation DC: Plain: 1st Side | *ENG | [1 to 60 / **26** / 1 /step] |
| 003 | Paper Transfer: Plain: BW: 1st Side | *ENG | [1 to 60 / **11** / 1 /step] |
| 005 | Paper Transfer: Plain: FC: 1st Side | *ENG | [1 to 60 / **1** / 1 /step] |
| 007 | Separation DC: Plain: 1st Side | *ENG | [1 to 60 / **26** / 1 /step] |
| 009 | Paper Transfer: 1200: BW: 1st Side | *ENG | [1 to 60 / **11** / 1 /step] |
| 011 | Paper Transfer: 1200: FC: 1st Side | *ENG | [1 to 60 / **1** / 1 /step] |

| **2481** | **[Glossy: Bias]** | | |
|---|---|---|---|
| 001 | Separation DC: Glossy: 1st Side | *ENG | [0 to 4000 / **2000** / 10 –V/step] |

| **2482** | **[Glossy: Bias: BW]** | | |
|---|---|---|---|
| 001 | Paper Transfer: Glossy: 1st Side | *ENG | [0 to 250 / **12** / 1 –μA /step] |

| **2483** | **[Glossy: Bias: FC]** | | |
|---|---|---|---|
| 001 | Paper Transfer: Glossy: 1st Side | *ENG | [0 to 250 / **15** / 1 –μA /step] |

| **2484** | **[Glossy: Paper Size Correction]** | | |
|---|---|---|---|
| 001 | Paper Transfer: Glossy: 1st Side: S1 | *ENG | [100 to 600 / **100** / 5%/step] |
| 005 | Paper Transfer: Glossy: 1st Side: S2 | *ENG | [100 to 600 / **120** / 5%/step] |
| 009 | Paper Transfer: Glossy: 1st Side: S3 | *ENG | [100 to 600 / **140** / 5%/step] |
| 013 | Paper Transfer: Glossy: 1st Side: S4 | *ENG | [100 to 600 / **160** / 5%/step] |
| 017 | Paper Transfer: Glossy: 1st Side: S5 | *ENG | [100 to 600 / **180** / 5%/step] |

| **2485** | **[Grossy: Leading Edge Correction]** | | |
|---|---|---|---|
| 001 | Paper Transfer: Grossy: 1st Side | *ENG | [10 to 400 / **100** / 5%/step] |
| 005 | Separation DC: Grossy: 1st Page | *ENG | [10 to 400 / **100** / 5%/step]] |

| **2486** | **[Grossy: Switch Timing: Lead. Edge]** | | |
|---|---|---|---|
| 001 | Paper Transfer: Grossy: 1st Side | *ENG | [0 to 50 / **0** / 2 mm/step] |
| 005 | Separation DC: Grossy: 1st Page | *ENG | |

| **2487** | **[Grossy: Trailing Edge Correction]** | | |
|---|---|---|---|
| 001 | Paper Transfer: Grossy: 1st Side | *ENG | [0 to 400 / **100** / 5 %/step] |
| 005 | Separation DC: Grossy: 1st Page | *ENG | |

| 2488 | [Grossy: Trailing Edge Correction] | | |
|---|---|---|---|
| 001 | Paper Transfer: Grossy: 1st Side | *ENG | [0 to 50 / **0** / 2 mm/step] |
| 005 | Separation DC: Grossy: 1st Page | *ENG | |

| 2489 | [Glossy: Environment Correction] | | |
|---|---|---|---|
| 001 | Separation DC: Glossy: 1st Page | *ENG | [1 to 60 / **26** / 1 /step] |
| 003 | Paper Transfer: BW: 1st Side | *ENG | [1 to 60 / **11** / 1 /step] |
| 005 | Paper Transfer: BW: 2nd Side | *ENG | [1 to 60 / **1** / 1 /step] |

| 2501 | [Thick 1: Bias] | | |
|---|---|---|---|
| | Adjusts the DC voltage of the discharge plate for thick 1 paper.<br>Thick 1 and Thick 2&Fine: 77 mm/sec | | |
| 001 | Separation DC: Thick 1: 1st Side | *ENG | [0 to 4000 / **1000** / 10 –V/step] |
| 002 | Separation DC: Thick 1: 2nd Side | *ENG | |
| 003 | Separation DC: Plain: 1st Side | *ENG | |

| 2502 | [Thick 1: Bias: BW] | | |
|---|---|---|---|
| | Adjusts the current for the paper transfer roller for thick 1 paper in black-and-white mode.<br>Thick 1 and Thick 2&Fine: 77 mm/sec | | |
| 001 | Paper Transfer: Thick 1: 1st Side | *ENG | [0 to 250 / **12** / 1 –μA /step] |
| 002 | Paper Transfer: Thick 1: 2nd Side | *ENG | |
| 003 | Separation DC: Plain: 1st Side | *ENG | [0 to 200 / **12** / 1 –μA /step] |

| | | | |
|---|---|---|---|
| **2507** | **[Thick 1: Bias: FC]** | | |
| | Adjusts the current for the paper transfer roller for thick 1 paper in full color mode.<br>Thick 1 and Thick 2&Fine: 77 mm/sec | | |
| 001 | Paper Transfer: Thick 1: 1st Side | *ENG | [0 to 200 / **15** / 1 –μA /step] |
| 002 | Paper Transfer: Thick 1: 2nd Side | *ENG | |
| 003 | Separation DC: Plain: 1st Side | *ENG | [0 to 200 / **15** / –μA /step] |

| | | | |
|---|---|---|---|
| **2511** | **[Thick 1: Paper Size Correction]** | | |
| | Adjusts the size correction coefficient for the paper transfer roller current for each paper size. SP2502 and SP2507 are multiplied by these SP values. Thick 1 and Thick 2&Fine: 77 mm/sec | | |
| 001 | Paper Transfer: Thick 1: 1st Side: S1 | *ENG | [100 to 600 / **100** / 5%/step] S1 size ≥ 297 mm (Paper width) |
| 002 | Paper Transfer: Thick 1: 2nd Side: S1 | *ENG | |
| 003 | Paper Transfer: Thick 1: 1st Side: S1 | *ENG | [100 to 600 / **100** / 5%/step] S1 size ≥ 297 mm (Paper width) |
| 005 | Paper Transfer: Thick 1: 1st Side: S2 | *ENG | [100 to 600 / **105** / 5%/step] 297 mm ≥ S2 size ≥ 275 mm (Paper width) |
| 006 | Paper Transfer: Thick 1: 2nd Side: S2 | *ENG | [100 to 600 / **130** / 5%/step] 297 mm ≥ S2 size ≥ 275 mm (Paper width) |
| 007 | Paper Transfer: Thick 1: 1st Side: S2 | *ENG | [100 to 600 / **120** / 5%/step] 297 mm ≥ S2 size ≥ 275 mm (Paper width) |
| 009 | Paper Transfer: Thick 1: 1st Side: S3 | *ENG | [100 to 600 / **110** / 5%/step] 275 mm ≥ S3 size ≥ 210 mm (Paper width) |
| 010 | Paper Transfer: Thick 1: 2nd Side: S3 | *ENG | [100 to 600 / **160** / 5%/step] 275 mm ≥ S3 size ≥ 210 mm (Paper width) |
| 011 | Paper Transfer: Thick 1: 1st Side: S3 | *ENG | [100 to 600 / **140** / 5%/step] 275 mm ≥ S3 size ≥ 210 mm (Paper width) |

| | | | |
|---|---|---|---|
| 013 | Paper Transfer: Thick 1: 1st Side: S4 | *ENG | [100 to 600 / **115** / 5%/step]<br>210 mm ≥ S4 size ≥ 148 mm (Paper width) |
| 014 | Paper Transfer: Thick 1: 2nd Side: S4 | *ENG | [100 to 600 / **190** / 5%/step]<br>210 mm ≥ S4 size ≥ 148 mm (Paper width) |
| 015 | Paper Transfer: Thick 1: 1st Side: S4 | *ENG | [100 to 600 / **160** / 5%/step]<br>210 mm ≥ S4 size ≥ 148 mm (Paper width) |
| 017 | Paper Transfer: Thick 1: 1st Side: S5 | *ENG | [100 to 600 / **120** / 5%/step]<br>148 mm ≥ S5 size (Paper width) |
| 018 | Paper Transfer: Thick 1: 2nd Side: S5 | *ENG | [100 to 600 / **220** / 5%/step]<br>148 mm ≥ S5 size (Paper width) |
| 019 | Paper Transfer: Thick 1: 1st Side: S5 | *ENG | [100 to 600 / **180** / 5%/step]<br>148 mm ≥ S5 size (Paper width) |

| | | | |
|---|---|---|---|
| **2521** | **[Thick 1: Leading Edge Correction]** Thick 1 Paper: Leading Edge Correction | | |
| | Adjusts the correction to the paper transfer roller current at the paper leading edge in each mode. SP2502 and SP2507 are multiplied by these SP values.<br>Thick 1 and Thick 2&Fine: 77 mm/sec<br>Note<br>▪ The paper leading edge area can be adjusted with SP2522. | | |
| 001 | Paper Transfer: Thick 1: 1st Side | *ENG | [0 to 400 / **100** / 5%/step] |
| 002 | Paper Transfer: Thick 1: 2nd Side | *ENG | |
| 003 | Paper Transfer: Thick 1: 1st Side | *ENG | [0 to 400 / **100** / 5%/step] |

| | | | |
|---|---|---|---|
| 005 | Separation DC: Thick 1: 1st Side | *ENG | [0 to 400 / **100** / 5%/step] |
| 006 | Separation DC: Thick 1: 2nd Side | *ENG | |
| 007 | Separation DC: Thick 1: 1st Side | *ENG | [0 to 400 / **100** / 5%/step] |

| | | | |
|---|---|---|---|
| **2522** | **[Thick 1: Switch Timing: Lead. Edge]** | | |
| | Adjusts the bias/ voltage switch timing of the paper transfer roller/ discharge plate at the paper leading edge between the erase margin area and the image area.<br>Thick 1 and Thick 2&Fine: 77 mm/sec | | |
| 001 | Paper Transfer: Thick 1: 1st Side | *ENG | [0 to 50 / **0** / 2 mm/step] |
| 002 | Paper Transfer: Plain: 2nd Side | *ENG | |
| 003 | Paper Transfer: Thick 1: 1st Side | *ENG | |
| 005 | Separation DC: Thick 1: 1st Side | *ENG | [0 to 50 / **0** / 2 mm/step] |
| 006 | Separation DC: Thick 1: 2nd Side | *ENG | |
| 007 | Separation DC: Thick 1: 1st Side | *ENG | |

| | | | |
|---|---|---|---|
| **2523** | **[Thick 1: Trailing Edge Correction]** Thick 1 Paper: Trailing Edge Correction | | |
| | Adjusts the correction coefficient to the paper transfer roller current for the paper trailing edge in each mode. SP2502 and SP2507 are multiplied by these SP values.<br>Thick 1 and Thick 2&Fine: 77 mm/sec<br>Note<br>▪ The paper trailing edge area can be adjusted with SP2524. | | |
| 001 | Paper Transfer: Thick 1: 1st Side | *ENG | [0 to 400 / **100** / 5%/step] |
| 002 | Paper Transfer: Thick 1: 2nd Side | *ENG | |
| 003 | Paper Transfer: Thick 1: 1st Side | *ENG | |
| 005 | Paper Transfer: Thick 1: 1st Side | *ENG | |
| 006 | Paper Transfer: Thick 1: 2nd Side | *ENG | [0 to 400 / **100** / 5%/step] |
| 007 | Paper Transfer: Thick 1: 1st Side | *ENG | |

| | | | |
|---|---|---|---|
| **2524** | **[Thick 1: Switch Timing: Trail. Edge]** | | |
| | Adjusts the bias/voltage switch timing of the paper transfer roller/discharge plate at the paper trailing edge between the erase margin area and the image area.<br>Thick 1 and Thick 2&Fine: 77 mm/sec | | |
| 001 | Paper Transfer: Plain: 1st Side | *ENG | [0 to 50 / **0** / 2 mm/step] |
| 002 | Paper Transfer: Plain: 2nd Side | *ENG | |
| 003 | Paper Transfer: Thick 1: 1st Side | *ENG | |
| 005 | Paper Transfer: Plain: 1st Side | *ENG | |
| 006 | Paper Transfer: Plain: 2nd Side | *ENG | |
| 007 | Paper Transfer: Thick 1: 1st Side | *ENG | |

| | | | |
|---|---|---|---|
| **2530** | **[Thick 1: Environment Correction]** | | |
| 001 | Paper Transfer: Plain: 1st Side | *ENG | [1 to 60 / **22** / 1 /step] |
| 002 | Paper Transfer: Plain: 2nd Side | *ENG | |
| 003 | Paper Transfer: Plain: BW: 1st Side | *ENG | [1 to 60 / **11** / 1 /step] |
| 004 | Paper Transfer: Plain: BW:2nd Side | *ENG | |
| 005 | Paper Transfer: Plain: FC: 1st Side | *ENG | [1 to 60 / **1** / 1 /step] |
| 006 | Paper Transfer: Plain: FC:2nd Side | *ENG | [1 to 60 / **11** / 1 /step] |

| | | | |
|---|---|---|---|
| **2551** | **[Thick 2: Bias]** | | |
| | Adjusts the DC voltage of the discharge plate for thick 2 paper. | | |
| 001 | Separation DC: 1st Page | *ENG | [0 to 4000 / **1000** / 10 –V/step] |
| 002 | Separation DC: 2nd Page | *ENG | |

| | | | |
|---|---|---|---|
| **2553** | **[Thick 2: Bias: BW]** | | |
| | Adjusts the current for the paper transfer roller for thick 2 paper in black-and-white mode. | | |
| 001 | Paper Transfer: 1st Side | *ENG | [0 to 250 / **7** / 1 –μA /step] |
| 002 | Paper Transfer: 2nd Side | *ENG | [0 to 250 / **12** / 1 –μA /step] |

| | | | |
|---|---|---|---|
| **2558** | **[Thick 2: Bias: FC]** | | |
| | Adjusts the current for the paper transfer roller for thick 2 paper in full color mode. | | |
| 001 | Paper Transfer: 1st Side | *ENG | [0 to 250 / **16** / 1 –μA /step] |
| 002 | Paper Transfer: 2nd Side | *ENG | [0 to 250 / **15** / 1 –μA /step] |

| | | | |
|---|---|---|---|
| **2561** | **[Thick 2: Paper Size Correction]** | | |
| | Adjusts the size correction coefficient for the paper transfer roller current for each paper size. SP2553 and SP2558 are multiplied by these SP values. | | |
| 001 | Paper Transfer: 1st Side: S1 | *ENG | [100 to 600 / **100** / 5%/step]<br>S1 size ≥ 297 mm (Paper width) |
| 002 | Paper Transfer: 2nd Side: S1 | *ENG | |
| 003 | Paper Transfer: 1st Side: S2 | *ENG | [100 to 600 / **105** / 5%/step]<br>297 mm ≥ S2 size ≥ 275 mm (Paper width) |
| 004 | Paper Transfer: 2nd Side: S2 | *ENG | [100 to 600 / **160** / 5%/step]<br>297 mm ≥ S2 size ≥ 275 mm (Paper width) |
| 005 | Paper Transfer: 1st Side: S3 | *ENG | [100 to 600 / **110** / 5%/step]<br>275 mm ≥ S3 size ≥ 210 mm (Paper width) |
| 006 | Paper Transfer: 2nd Side: S3 | *ENG | [100 to 600 / **260** / 5%/step]<br>275 mm ≥ S3 size ≥ 210 mm (Paper width) |
| 007 | Paper Transfer: 1st Side: S4 | *ENG | [100 to 600 / **120** / 5%/step]<br>210 mm ≥ S4 size ≥ 148 mm (Paper width) |
| 008 | Paper Transfer: 2nd Side: S4 | *ENG | [100 to 600 / **430** / 5%/step]<br>210 mm ≥ S4 size ≥ 148 mm (Paper width) |
| 009 | Paper Transfer: 1st Side: S5 | *ENG | [100 to 600 / **140** / 5%/step]<br>148 mm ≥ S5 size (Paper width) |
| 010 | Paper Transfer: 2nd Side: S5 | *ENG | [100 to 600 / **600** / 5%/step]<br>148 mm ≥ S5 size (Paper width) |

| | | | |
|---|---|---|---|
| **2571** | **[Thick 2: Leading Edge Correction]** Thick 2 Paper: Leading Edge Correction | | |
| | Adjusts the correction to the paper transfer roller current at the paper leading edge in each mode. SP2553 and SP2558 are multiplied by these SP values.<br>Note<br>▪ The paper leading edge area can be adjusted with SP2572. | | |
| 001 | Paper Transfer: 1st Side | *ENG | [0 to 400 / **100** / 5%/step] |
| 002 | Paper Transfer: 2nd Side | *ENG | |
| **2571** | Adjusts the correction to the discharge plate current at the paper leading edge in each mode. SP2551 is multiplied by these SP values.<br>Note<br>▪ The paper leading edge area can be adjusted with SP2572. | | |
| 003 | Separation DC: 1st Page | *ENG | [0 to 400 / **100** / 5%/step] |
| 004 | Separation DC: 2nd Page | *ENG | |

| | | | |
|---|---|---|---|
| **2572** | **[Thick 2: Switch Timing: Lead. Edge]** | | |
| | Adjusts the bias/ voltage switch timing of the paper transfer roller/ discharge plate at the paper leading edge between the erase margin area and the image area. | | |
| 001 | Paper Transfer: 1st Side | *ENG | [0 to 50 / **0** / 2mm/step] |
| 002 | Paper Transfer: 2nd Side | *ENG | |
| 003 | Separation DC: 1st Page | *ENG | |
| 004 | Separation DC: 2nd Page | *ENG | |

| | | | |
|---|---|---|---|
| **2573** | **[Thick 2: Trailing Edge Correction]** Thick 2 Paper: Trailing Edge Correction | | |
| | Adjusts the correction to the paper transfer roller current for the paper trailing edge in each mode. SP2553 and SP2558 are multiplied by these SP values.<br>Note<br>▪ The paper trailing edge area can be adjusted with SP2574. | | |
| 001 | Paper Transfer: 1st Side | *ENG | [0 to 400 / **100** / 5%/step] |
| 002 | Paper Transfer: 2nd Side | *ENG | |
| 003 | Separation DC: 1st Page | *ENG | [0 to 400 / **100** / 5%/step] |
| 004 | Separation DC: 2nd Page | *ENG | [0 to 400 / **100** / 5%/step] |

| | | | |
|---|---|---|---|
| **2574** | **[Thick 2: Switch Timing: Trail. Edge]** | | |
| | Adjusts the bias/voltage switch timing of the paper transfer roller/discharge plate at the paper trailing edge between the erase margin area and the image area. | | |
| 001 | Paper Transfer: 1st Side | *ENG | [0 to 50 / **0** / 2 mm/step] |
| 002 | Paper Transfer: 2nd Side | *ENG | |
| 003 | Separation DC: 1st Page | *ENG | [0 to 50 / **0** / 2 mm/step] |
| 004 | Separation DC: 2nd Page | *ENG | [0 to 50 / **0** / 2 mm/step] |

| **2580** | **[Thick 2 Environment Correction]** | | |
|---|---|---|---|
| 001 | Separation DC: 1st Page | *ENG | [1 to 60 / **22** / 1 /step] |
| 002 | Separation DC: 2nd Page | *ENG | |
| 003 | Paper Transfer: BW: 1st Side | *ENG | [0 to 60 / **11** / 1 /step] |
| 004 | Paper Transfer: BW: 2nd Side | *ENG | |
| 005 | Paper Transfer: FC: 1st Side | *ENG | [1 to 60 / **53** / 1 /step] |
| 006 | Paper Transfer: FC: 2nd Side | *ENG | [1 to 60 / **11** / 1 /step] |

| **2601** | **[OHP: Bias]** | | |
|---|---|---|---|
| 001 | Separation DC | *ENG | [0 to 40000 / **1000** / 10 –V/step] |

| **2601** | **[OHP: Bias]** | | |
|---|---|---|---|
| | Adjusts the DC voltage of the discharge plate for OHP. | | |
| 001 | Separation DC | *ENG | [0 to 4000 / **1000** / 10 –V/step] |

| **2603** | **[OHP: Bias: BW]** | | |
|---|---|---|---|
| | Adjusts the current for the paper transfer roller for OHP in black-and-white mode. | | |
| 001 | Paper Transfer | *ENG | [0 to 250 / **12** / 1 –μA /step] |

| | | | |
|---|---|---|---|
| **2608** | **[OHP: Bias: FC]** | | |
| | Adjusts the current for the paper transfer roller for OHP in full color mode. | | |
| 001 | Paper Transfer | *ENG | [0 to 250 / **15** / 1 –μA /step] |

| | | | |
|---|---|---|---|
| **2611** | **[OHP: Paper Size Correction]** | | |
| | Adjusts the size correction coefficient for the paper transfer roller current for each paper size. SP2603 and SP2608 are multiplied by these SP values. | | |
| 001 | Paper Transfer: S1 | *ENG | [100 to 600 / **100** / 5%/step]<br>S1 size ≥ 297 mm (Paper width) |
| 002 | Paper Transfer: S2 | *ENG | [100 to 600 / **140** / 5%/step]<br>297 mm ≥ S2 size ≥ 275 mm (Paper width) |
| 003 | Paper Transfer: S3 | *ENG | [100 to 600 / **200** / 5%/step]<br>275 mm ≥ S3 size ≥ 210 mm (Paper width) |
| 004 | Paper Transfer: S4 | *ENG | [100 to 600 / **260** / 5%/step]<br>210 mm ≥ S4 size ≥ 148 mm (Paper width) |
| 005 | Paper Transfer: S5 | *ENG | [100 to 600 / **330** / 5%/step]<br>148 mm ≥ S5 size (Paper width) |

| | | | |
|---|---|---|---|
| **2621** | **[OHP: Leading Edge Correction]** OHP: Leading Edge Correction | | |
| | Adjusts the correction to the paper transfer roller current at the paper leading edge in each mode. SP2603 and SP2608 are multiplied by these SP values.<br>Note<br>▪ The paper leading edge area can be adjusted with SP2622. | | |
| 001 | Paper Transfer | *ENG | [0 to 400 / **100** / 5%/step] |
| **2621** | Adjusts the correction to the discharge plate current at the paper leading edge in each mode. SP2601 is multiplied by these SP values.<br>Note<br>▪ The paper leading edge area can be adjusted with SP2622. | | |
| 002 | Separation DC | *ENG | [0 to 400 / **100** / 5%/step] |

| | | | |
|---|---|---|---|
| **2622** | **[OHP: Switch Timing: Lead. Edge]** | | |
| | Adjusts the bias/ voltage switch timing of the paper transfer roller/ discharge plate at the paper leading edge between the erase margin area and the image area. | | |
| 001 | Paper Transfer | *ENG | [0 to 50 / **0** / 2 mm/step] |
| 002 | Separation DC | *ENG | |

| | | | |
|---|---|---|---|
| **2623** | **[OHP: Trailing Edge Correction]** OHP: Trailing Edge Correction | | |
| | Adjusts the correction to the paper transfer roller current for the paper trailing edge in each mode. SP2603 and SP2608 are multiplied by these SP values.<br>Note<br>▪ The paper trailing edge area can be adjusted with SP2624. | | |
| 001 | Paper Transfer | *ENG | [0 to 400 / **100** / 5%/step] |
| 002 | Separation DC | | [0 to 400 / **100** / 5%/step] |

| | | | |
|---|---|---|---|
| **2624** | **[OHP: Trailing Edge Correction]** | | |
| | Adjusts the bias/voltage switch timing of the paper transfer roller/discharge plate at the paper trailing edge between the erase margin area and the image area. | | |
| 001 | Paper Transfer | *ENG | [–100 to 0 / **0** / 1 mm/step] |
| 002 | Separation DC | *ENG | [0 to 50 / **0** / 2 mm/step] |

| | | | |
|---|---|---|---|
| **2630** | **[OHP: Environment Correction]** | | |
| 001 | Separation DC | *ENG | [1 to 60 / **22** / 1 /step] |
| 002 | Paper Transfer: BW | *ENG | [1 to 60 / **11** / 1 /step] |
| 003 | Paper Transfer: FC | *ENG | [1 to 60 / **1** / 1 /step] |

| | | | |
|---|---|---|---|
| **2650** | **[Thick 3: Bias]** | | |
| | Adjusts the DC voltage of the discharge plate for thick paper 3. | | |
| 001 | Separation DC: 1st Page | *ENG | [0 to 4000 / **1000** / 10 –V/step] |
| 002 | Separation DC: 2nd Page | *ENG | |

| | | | |
|---|---|---|---|
| **2651** | **[Thick 3: Bias: BW]** | | |
| | Adjusts the current for the paper transfer roller for thick paper 3 in black-and-white mode. | | |
| 001 | Paper Transfer: 1st Side | *ENG | [0 to 250 / **10** / 1 –μA /step] |
| 002 | Paper Transfer: 2nd Side | *ENG | [0 to 250 / **12** / 1 –μA /step] |

| | | | |
|---|---|---|---|
| **2652** | **[Thick 3: Bias: FC]** | | |
| | Adjusts the current for the paper transfer roller for thick paper 3 in full color mode. | | |
| 001 | Paper Transfer: 1st Side | *ENG | [0 to 250 / **11** / 1 –μA /step] |
| 002 | Paper Transfer: 2nd Side | *ENG | [0 to 250 / **15** / 1 –μA /step] |

| | | | |
|---|---|---|---|
| **2653** | **[Thick 3: Paper Size Correction]** | | |
| | Adjusts the size correction coefficient for the paper transfer roller current for each paper size. SP2651 and SP2652 are multiplied by these SP values. | | |
| 001 | Paper Transfer: 1st Side: S1 | *ENG | [100 to 600 / **100** / 5%/step]<br>S1 size ≥ 297 mm (Paper width) |
| 002 | Paper Transfer: 1st Side: S2 | *ENG | [100 to 600 / **100** / 5%/step]<br>297 mm ≥ S2 size ≥ 275 mm (Paper width) |
| 003 | Paper Transfer: 1st Side: S3 | *ENG | [100 to 600 / **100** / 5%/step]<br>275 mm ≥ S3 size ≥ 210 mm (Paper width) |
| 004 | Paper Transfer: 1st Side: S4 | *ENG | [100 to 600 / **160** / 5%/step]<br>210 mm ≥ S4 size ≥ 148 mm (Paper width) |
| 005 | Paper Transfer: 1st Side: S5 | *ENG | [100 to 600 / **100** / 5%/step]<br>148 mm ≥ S5 size (Paper width) |
| 006 | Paper Transfer: 2nd Side: S1 | *ENG | [100 to 600 / **260** / 5%/step]<br>S1 size ≥ 297 mm (Paper width) |

| | | | |
|---|---|---|---|
| 007 | Paper Transfer: 2nd Side: S2 | *ENG | [100 to 600 / **100** / 5%/step]<br>297 mm ≥ S2 size ≥ 275 mm (Paper width) |
| 008 | Paper Transfer: 2nd Side: S2 | *ENG | [100 to 600 / **430** / 5%/step]<br>275 mm ≥ S3 size ≥ 210 mm (Paper width) |
| 009 | Paper Transfer: 2nd Side: S4 | *ENG | [100 to 600 / **100** / 5%/step]<br>210 mm ≥ S4 size ≥ 148 mm (Paper width) |
| 010 | Paper Transfer: 2nd Side: S4 | *ENG | [100 to 600 / **600** / 5%/step]<br>148 mm ≥ S5 size (Paper width) |

| | | | |
|---|---|---|---|
| **2654** | **[Thick 3: Leading Edge Correction]** Thick 3 Paper: Leading Edge Correction | | |
| | Adjusts the correction to the paper transfer roller current at the paper leading edge in each mode. SP2651 and SP2652 are multiplied by these SP values.<br>Note<br>▪ The paper leading edge area can be adjusted with SP2655. | | |
| 001 | Paper Transfer: 1st Side | *ENG | [0 to 400 / **100** / 5%/step] |
| 002 | Separation DC: 1st Page | *ENG | |
| **2654** | Adjusts the correction to the discharge plate current at the paper leading edge in each mode. SP2650 is multiplied by these SP values.<br>Note<br>▪ The paper leading edge area can be adjusted with SP2655. | | |
| 003 | Paper Transfer: 2nd Side | *ENG | [0 to 400 / **100** / 5%/step] |
| 004 | Separation DC: 2nd Page | *ENG | |

| | | | |
|---|---|---|---|
| **2655** | **[Thick 3: Switch Timing: Lead. Edge]** | | |
| | Adjusts the bias/ voltage switch timing of the paper transfer roller/ discharge plate at the paper leading edge between the erase margin area and the image area. | | |
| 001 | Paper Transfer: 1st Side | *ENG | [0 to 50 / **0** / 2 mm/step] |
| 002 | Separation DC: 1st Page | *ENG | |
| 003 | Paper Transfer: 2nd Side | *ENG | |
| 004 | Separation DC: 2nd Page | *ENG | |

| | | | |
|---|---|---|---|
| **2656** | **[Thick 3: Trailing Edge Correction]** Thick 3 Paper: Trailing Edge Correction | | |
| | Adjusts the correction to the paper transfer roller current for the paper trailing edge in each mode. SP2651 and SP2652 are multiplied by these SP values.<br>Note<br>▪ The paper trailing edge area can be adjusted with SP2657. | | |
| 001 | Paper Transfer: 1st Side | *ENG | [0 to 400 / **100** / 5%/step] |
| 002 | Paper Transfer: 2nd Side | *ENG | |
| 003 | Separation DC: 1st Page | *ENG | [0 to 400 / **100** / 5%/step] |
| 004 | Separation DC: 2st Page | *ENG | [0 to 400 / **100** / 5%/step] |

| | | | |
|---|---|---|---|
| **2657** | **[Thick 3: Trailing Edge Correction]** | | |
| | Adjusts the bias/voltage switch timing of the paper transfer roller/discharge plate at the paper trailing edge between the erase margin area and the image area. | | |
| 001 | Paper Transfer: 1st Side | *ENG | [0 to 50 / **0** / 2 mm/step] |
| 002 | Paper Transfer: 2nd Side | *ENG | |
| 003 | Separation DC: 1st Page | *ENG | |
| 004 | Separation DC: 2nd Page | *ENG | [0 to 50 / **0** / 2 mm/step] |

| | | | |
|---|---|---|---|
| **2660** | **[Thick 3: Environment Correction]** Thick 3 Paper: MM Environment Coefficient Adjustment | | |
| | Adjusts the environment coefficient for each mode. When the environment is detected as MM, SP2651 and SP2652 are multiplied by these SP values. | | |
| 001 | Separation DC: 1st Page | *ENG | [1 to 60 / **22** / 1 /step] |
| 002 | | *ENG | |
| **2660** | Adjusts the environment coefficient for each mode. When the environment is detected as MM, SP2650 is multiplied by these SP values. | | |
| 003 | Paper Transfer: Thick 3: 2nd Side | *ENG | [1 to 60 / **11** / 1 /step] |
| 004 | Separation DC: Thick 3: 2nd Side: | *ENG | |
| 005 | Paper Transfer: FC: 1st Side | *ENG | [1 to 60 / **55** / 1 /step] |

| | | | |
|---|---|---|---|
| **2661** | **[Thick 3: MH]** Thick 3 Paper: MH Environment Coefficient Adjustment | | |
| | Adjusts the environment coefficient for each mode. When the environment is detected as MH, SP2651 and SP2652 are multiplied by these SP values. | | |
| 001 | Paper Transfer: Thick 3: 1st Side | *ENG | [10 to 250 / **110** / 5%/step] |
| 002 | Separation DC: Thick 3: 1st Side | *ENG | [10 to 250 / **90** / 5%/step] |
| **2661** | Adjusts the environment coefficient for each mode. When the environment is detected as MH, SP2650 is multiplied by these SP values. | | |
| 003 | Paper Transfer: Thick 3: 2nd Side | *ENG | [10 to 250 / **110** / 5%/step] |
| 004 | Separation DC: Thick 3: 2nd Side: | *ENG | [10 to 250 / **180** / 5%/step] |

| | | | |
|---|---|---|---|
| **2662** | **[Thick 3: HH]** Thick 3 Paper: HH Environment Coefficient Adjustment | | |
| | Adjusts the environment coefficient for each mode. When the environment is detected as HH, SP2651 and SP2652 are multiplied by these SP values. | | |
| 001 | Paper Transfer: Thick 3: 1st Side | *ENG | [10 to 250 / **120** / 5%/step] |
| 002 | Separation DC: Thick 3: 1st Side | *ENG | [10 to 250 / **80** / 5%/step] |
| **2662** | Adjusts the environment coefficient for each mode. When the environment is detected as HH, SP2650 is multiplied by these SP values. | | |
| 003 | Paper Transfer: Thick 3: 2nd Side | *ENG | [10 to 250 / **120** / 5%/step] |
| 004 | Separation DC: Thick 3: 2nd Side: | *ENG | [10 to 250 / **80** / 5%/step] |

| | | | |
|---|---|---|---|
| **2751** | **[Special 1: Bias]** | | |
| | Adjusts the DC voltage of the discharge plate for special paper 1.<br>Plain: 154 mm/sec, Fine: 77 mm/sec | | |
| 001 | Separation DC: Plain: 1st Side | *ENG | [0 to 4000 / **2000** / 10 –V/step] |
| 002 | Separation DC: Plain: 2nd Side | *ENG | [0 to 4000 / **3000** / 10 –V/step] |
| 003 | Paper Transfer: Thick 1: 1st Side | *ENG | [0 to 4000 / **2000** / 10 –V/step] |

| | | | |
|---|---|---|---|
| **2753** | **[Special 1: Bias: BW]** | | |
| | Adjusts the current for the paper transfer roller for special paper 1 in black-and-white mode.<br>Plain: 154 mm/sec, Fine: 77 mm/sec | | |
| 001 | Paper Transfer: Plain: 1st Side | *ENG | [0 to 200 / **22** / 1 –μA /step] |
| 002 | Paper Transfer: Plain: 2nd Side | *ENG | |
| 003 | Paper Transfer: FINE: 1st Side | *ENG | |

| | | | |
|---|---|---|---|
| **2757** | **[Special 1: Bias: FC]** | | |
| | Adjusts the current for the paper transfer roller for special paper 1 in full color mode.<br>Plain: 154 mm/sec, Fine: 77 mm/sec | | |
| 001 | Paper Transfer: Plain: 1st Side | *ENG | [0 to 200 / **22** / 1 –μA /step] |
| 002 | Paper Transfer: Plain: 2nd Side | *ENG | [0 to 200 / **33** / 1 –μA /step] |
| 003 | Paper Transfer: Plain: 1st Side | *ENG | [0 to 250 / **15** / 1 –μA /step] |

| | | | |
|---|---|---|---|
| **2761** | **[Special 1: Paper Size Correction]** | | |
| | Adjusts the size correction coefficient for the paper transfer roller current for each paper size. SP2753 and SP2757 are multiplied by these SP values. Plain: 154 mm/sec, Fine: 77 mm/sec | | |
| 001 | Paper Transfer: Plain: 1st Side: S1 | *ENG | [100 to 600 / **100** / 5%/step] S1 size ≥ 297 mm (Paper width) |
| 002 | Paper Transfer: Plain: 2nd Side: S1 | *ENG | |
| 005 | Paper Transfer: Plain: 1st Side: S2 | *ENG | [100 to 600 / **120** / 5%/step] 297 mm ≥ S2 size ≥ 275 mm (Paper width) |
| 006 | Paper Transfer: Plain: 2nd Side: S2 | *ENG | |
| 009 | Paper Transfer: Plain: 1st Side: S3 | *ENG | [100 to 600 / **140** / 5%/step] 275 mm ≥ S3 size ≥ 210 mm (Paper width) |
| 010 | Paper Transfer: Plain: 2nd Side: S3 | *ENG | |
| 013 | Paper Transfer: Plain: 1st Side: S4 | *ENG | [100 to 600 / **160** / 5%/step] 210 mm ≥ S4 size ≥ 148 mm (Paper width) |
| 014 | Paper Transfer: Plain: 2nd Side: S4 | *ENG | [100 to 600 / **160** / 5%/step] 210 mm ≥ S4 size ≥ 148 mm (Paper width) |
| 017 | Paper Transfer: Plain: 1st Side: S5 | *ENG | [100 to 600 / **180** / 5%/step] 148 mm ≥ S5 size (Paper width) |
| 018 | Paper Transfer: Plain: 2nd Side: S5 | *ENG | [100 to 600 / **180** / 5%/step] 148 mm ≥ S5 size (Paper width) |

| | | | |
|---|---|---|---|
| **2771** | **[Special 1: Leading Edge Correction]** Special 1 Paper: Leading Edge Correction | | |
| | Adjusts the correction to the paper transfer roller current at the paper leading edge in each mode. SP2753 and SP2757 are multiplied by these SP values. Plain: 154 mm/sec, Fine: 77 mm/sec<br>Note<br>▪ The paper leading edge area can be adjusted with SP2772. | | |
| 001 | Paper Transfer: Plain: 1st Side | *ENG | [0 to 400 / **100** / 5%/step] |
| 002 | Paper Transfer: Plain: 2nd Side | *ENG | [0 to 400 / **100** / 5%/step] |
| 003 | Paper Transfer: Plain: 1st Side | *ENG | [0 to 400 / **100** / 5%/step] |
| **2771** | Adjusts the correction to the discharge plate current at the paper leading edge in each mode. SP2751 is multiplied by these SP values.<br>Note<br>▪ The paper leading edge area can be adjusted with SP2772. | | |
| 005 | Separation DC: Plain: 1st Side | *ENG | [0 to 400 / **100** / 5%/step] |
| 006 | Separation DC: Plain: 2nd Side | *ENG | |
| 007 | Separation DC: Plain: 1st Side | *ENG | [0 to 400 / **100** / 5%/step] |
| 008 | Separation DC: Fine: 2nd Page | *ENG | |

| | | | |
|---|---|---|---|
| **2772** | **[Special 1: Switch Timing: Lead. Edge]** | | |
| | Adjusts the bias/ voltage switch timing of the paper transfer roller/ discharge plate at the paper leading edge between the erase margin area and the image area.<br>Plain: 154 mm/sec, Fine: 77 mm/sec | | |
| 001 | Paper Transfer: Plain: 1st Side | *ENG | [0 to 50 / **0** / 2 mm/step] |
| 002 | Paper Transfer: Plain: 2nd Side | *ENG | |
| 003 | Paper Transfer: Plain: 1st Side | *ENG | [0 to 50 / **0** / 1 mm/step] |
| 005 | Separation DC: Plain: 1st Side | *ENG | [0 to 50 / **0** / 2 mm/step] |
| 006 | Separation DC: Plain: 2nd Side | *ENG | |
| 007 | Separation DC: Plain: 1st Side | *ENG | |

| | | | |
|---|---|---|---|
| **2773** | **[Special 1: Trailing Edge Correction]** Special 1 Paper: Trailing Edge Correction | | |
| | Adjusts the correction to the paper transfer roller current for the paper trailing edge in each mode. SP2753 and SP2757 are multiplied by these SP values.<br>Plain: 154 mm/sec, Fine: 77 mm/sec<br>Note<br>▪ The paper trailing edge area can be adjusted with SP2774. | | |
| 001 | Paper Transfer: Plain: 1st Side | *ENG | [0 to 400 / **100** / 5%/step] |
| 002 | Paper Transfer: Plain: 2nd Side | *ENG | |
| 003 | Paper Transfer: Plain: 1st Side | *ENG | |
| 005 | Separation DC: Plain: 1st Side | *ENG | |
| 006 | Separation DC: Plain: 2nd Side | *ENG | |
| 007 | Separation DC: Plain: 1st Side | *ENG | |

| | | | |
|---|---|---|---|
| **2774** | **[Special 1: Switch Timing: Trail. Edge]** | | |
| | Adjusts the bias/voltage switch timing of the paper transfer roller/discharge plate at the paper trailing edge between the erase margin area and the image area.<br>Plain: 154 mm/sec, Fine: 77 mm/sec | | |
| 001 | Paper Transfer: Plain: 1st Side | *ENG | [0 to 50 / **0** / 2 mm/step] |
| 002 | Paper Transfer: Plain: 2nd Side | *ENG | |
| 003 | Paper Transfer: FINE: 1st Side | *ENG | |
| 005 | Separation DC: Plain: 1st Side | *ENG | |
| 006 | Separation DC: Plain: 2nd Side | *ENG | |
| 007 | Separation DC: Plain: 1st Side | *ENG | |

| | | | |
|---|---|---|---|
| **2780** | **[Special 1: Environment Correction]** | | |
| 001 | Separation DC: Plain: 1st Side | *ENG | [1 to 60 / **26** / 1 /step] |
| 002 | Separation DC: Plain: 2nd Side | *ENG | [1 to 60 / **32** / 1 /step] |
| 003 | Paper Transfer: Plain: BW: 1st Side | *ENG | [1 to 60 / **11** / 1 /step] |
| 004 | Paper Transfer: Plain: BW:2nd Side | *ENG | |
| 005 | Paper Transfer: Plain: FC: 1st Side | *ENG | [1 to 60 / **1** / 1 /step] |
| 006 | Paper Transfer: Plain: FC:2nd Side | *ENG | [1 to 60 / **14** / 1 /step] |
| 007 | Separation DC: Plain: 1st Side | *ENG | [1 to 60 / **26** / 1 /step] |

| | | | |
|---|---|---|---|
| 009 | Paper Transfer: 1200: BW: 1st Side | *ENG | [1 to 60 / **11** / 1 /step] |
| 011 | Paper Transfer: 1200: FC: 1st Side | *ENG | [1 to 60 / **1** / 1 /step] |

| | | | |
|---|---|---|---|
| **2801** | **[Special 2: Bias]** | | |
| | Adjusts the DC voltage of the discharge plate for special paper 2.<br>Plain: 154 mm/sec, Fine: 77 mm/sec | | |
| 001 | Separation DC: Plain: 1st Side | *ENG | [0 to 4000 / **2000** / 10 –V/step] |
| 002 | Separation DC: Plain: 2nd Side | *ENG | [0 to 4000 / **3000** / 10 –V/step] |
| 003 | Separation DC: Plain: 1st Side | *ENG | [0 to 4000 / **2000** / 10 –V/step] |

| | | | |
|---|---|---|---|
| **2803** | **[Special 2: Bias: BW]** | | |
| | Adjusts the current for the paper transfer roller for special paper 2 in black-and-white mode.<br>Plain: 154 mm/sec, Fine: 77 mm/sec | | |
| 001 | Paper Transfer: Plain: 1st Side | *ENG | [0 to 200 / **22** / 1 –μA /step] |
| 002 | Paper Transfer: Plain: 2nd Side | *ENG | |
| 003 | Separation DC: Plain: 1st Side | *ENG | [0 to 200 / **11** / 1 –μA /step] |

| | | | |
|---|---|---|---|
| **2807** | **[Special 2: Bias: FC]** | | |
| | Adjusts the current for the paper transfer roller for special paper 2 in full color mode.<br>Plain: 154 mm/sec, Fine: 77 mm/sec | | |
| 001 | Paper Transfer: Plain: 1st Side | *ENG | [0 to 200 / **30** / 1 –μA /step] |
| 002 | Paper Transfer: Plain: 2nd Side | *ENG | [0 to 200 / **33** / 1 –μA /step] |
| 003 | Separation DC: Plain: 1st Side | *ENG | [0 to 200 / **15** / 1 –μA /step] |

| | | | |
|---|---|---|---|
| **2811** | **[Special 2: Paper Size Correction]** | | |
| | Adjusts the size correction coefficient for the paper transfer roller current for each paper size. SP2803 and SP2807 are multiplied by these SP values.<br>Plain: 154 mm/sec, Fine: 77 mm/sec | | |
| 001 | Paper Transfer: Plain: 1st Side: S1 | *ENG | [100 to 600 / **100** / 5%/step]<br>S1 size ≥ 297 mm (Paper width) |
| 002 | Paper Transfer: Plain: 2nd Side: S1 | *ENG | |
| 005 | Paper Transfer: Plain: 1st Side: S2 | *ENG | [100 to 600 / **120** / 5%/step]<br>297 mm ≥ S2 size ≥ 275 mm (Paper width) |
| 006 | Paper Transfer: Plain: 2nd Side: S2 | *ENG | [100 to 600 / **120** / 5%/step]<br>297 mm ≥ S2 size ≥ 275 mm (Paper width) |
| 009 | Paper Transfer: Plain: 1st Side: S3 | *ENG | [100 to 600 / **140** / 5%/step]<br>275 mm ≥ S3 size ≥ 210 mm (Paper width) |

| | | | |
|---|---|---|---|
| 010 | Paper Transfer: Plain: 2nd Side: S3 | *ENG | [100 to 600 / **140** / 5%/step] 275 mm ≥ S3 size ≥ 210 mm (Paper width) |
| 013 | Paper Transfer: Plain: 1st Side: S4 | *ENG | [100 to 600 / **160** / 5%/step] 210 mm ≥ S4 size ≥ 148 mm (Paper width) |
| 014 | Paper Transfer: Plain: 2nd Side: S4 | *ENG | [100 to 600 / **220** / 5%/step] 210 mm ≥ S4 size ≥ 148 mm (Paper width) |
| 015 | Paper Transfer: FINE: 1st Side: S4 | *ENG | [100 to 600 / **140** / 5%/step] 210 mm ≥ S4 size ≥ 148 mm (Paper width) |
| 016 | Paper Transfer: FINE: 2nd Side: S4 | *ENG | |
| 017 | Paper Transfer: Plain: 1st Side: S5 | *ENG | [100 to 600 / **180** / 5%/step] 148 mm ≥ S5 size (Paper width) |
| 018 | Paper Transfer: Plain: 2nd Side: S5 | *ENG | [100 to 600 / **180** / 5%/step] 148 mm ≥ S5 size (Paper width) |

| | | | |
|---|---|---|---|
| **2821** | **[Special 2: Leading Edge Correction]** Special 2 Paper: Leading Edge Correction | | |
| | Adjusts the correction to the paper transfer roller current at the paper leading edge in each mode. SP2803 and SP2807 are multiplied by these SP values. Plain: 154 mm/sec, Fine: 77 mm/sec<br>Note<br>▪ The paper leading edge area can be adjusted with SP2822. | | |
| 001 | Paper Transfer: Plain: 1st Side | *ENG | [0 to 400 / **100** / 5%/step] |
| 002 | Paper Transfer: Plain: 2nd Side | *ENG | [0 to 400 / **100** / 5%/step] |
| 003 | Paper Transfer: Plain: 1st Side | *ENG | [0 to 400 / **100** / 5%/step] |
| **2821** | Adjusts the correction to the discharge plate current at the paper leading edge in each mode. SP2801 is multiplied by these SP values.<br>Note<br>▪ The paper leading edge area can be adjusted with SP2822. | | |
| 005 | Separation DC: Plain: 1st Side | *ENG | [0 to 400 / **100** / 5%/step] |
| 006 | Separation DC: Plain: 2nd Side | *ENG | |
| 007 | Separation DC: Fine: 1st Side | *ENG | |
| 008 | Separation DC: Fine: 2nd Side | *ENG | |

| | | | |
|---|---|---|---|
| **2822** | **[Special 2: Switch Timing: Lead. Edge]** | | |
| | Adjusts the bias/ voltage switch timing of the paper transfer roller/ discharge plate at the paper leading edge between the erase margin area and the image area.<br>Plain: 154 mm/sec, Fine: 77 mm/sec | | |
| 001 | Paper Transfer: Plain: 1st Side | *ENG | [0 to 50 / **0** / 2 mm/step] |
| 002 | Paper Transfer: Plain: 2nd Side | *ENG | |
| 003 | Paper Transfer: Plain: 1st Side | *ENG | |
| 005 | Separation DC: Plain: 1st Side | *ENG | |
| 006 | Separation DC: Plain: 2nd Side | *ENG | |
| 007 | Separation DC: Plain: 1st Side | *ENG | |

| | | | |
|---|---|---|---|
| **2823** | **[Special 2: Trailing Edge Correction]** Special 2 Paper: Trailing Edge Correction | | |
| | Adjusts the correction to the paper transfer roller current for the paper trailing edge in each mode. SP2803 and SP2807 are multiplied by these SP values.<br>Plain: 154 mm/sec, Fine: 77 mm/sec<br>Note<br>▪ The paper trailing edge area can be adjusted with SP2824. | | |
| 001 | Paper Transfer: Plain: 1st Side | *ENG | [0 to 400 / **100** / 5%/step] |
| 002 | Paper Transfer: Plain: 2nd Side | *ENG | |
| 003 | Paper Transfer: Plain: 1st Side | *ENG | [0 to 400 / **100** / 5%/step] |
| 005 | Separation DC: Plain: 1st Side | *ENG | |
| 006 | Separation DC: Plain: 2nd Side | *ENG | |
| 007 | Separation DC: Plain: 1st Side | *ENG | |

| | | | |
|---|---|---|---|
| **2824** | **[Special 2: Switch Timing: Trail. Edge]** | | |
| | Adjusts the bias/voltage switch timing of the paper transfer roller/discharge plate at the paper trailing edge between the erase margin area and the image area.<br>Plain: 154 mm/sec, Fine: 77 mm/sec | | |
| 001 | Paper Transfer: Plain: 1st Side | *ENG | [0 to 50 / **0** / 2 mm/step] |
| 002 | Paper Transfer: Plain: 2nd Side | *ENG | |
| 003 | Paper Transfer: Plain: 1st Side | *ENG | [0 to 50 / **0** / 2 mm/step] |
| 005 | Separation DC: Plain: 1st Side | *ENG | |
| 006 | Separation DC: Plain: 2nd Side | *ENG | |
| 007 | Separation DC: Plain: 1st Side | *ENG | |

| | | | |
|---|---|---|---|
| **2830** | **[Special 2: Environment Correction]** | | |
| 001 | Paper Transfer: Plain: 1st Side | *ENG | [1 to 60 / **26** / 1 /step] |
| 002 | Paper Transfer: Plain: 2nd Side | *ENG | [1 to 60 / **32** / 1 /step] |
| 003 | Paper Transfer: Plain: BW: 1st Side | *ENG | [1 to 60 / **1** / 1 /step] |
| 004 | Paper Transfer: Plain: BW:2nd Side | *ENG | [1 to 60 / **11** / 1 /step] |
| 005 | Paper Transfer: Plain: FC: 1st Side | *ENG | [1 to 60 / **1** / 1 /step] |
| 006 | Paper Transfer: Plain: FC:2nd Side | *ENG | [1 to 60 / **14** / 1 /step] |

| | | | |
|---|---|---|---|
| 007 | Paper Transfer: Plain: 1st Side | *ENG | [1 to 60 / **26** / 1 /step] |
| 009 | Paper Transfer: 1200: BW: 1st Side | *ENG | [1 to 60 / **11** / 1 /step] |
| 011 | Paper Transfer: 1200: FC: 1st Side | *ENG | [1 to 60 / **1** / 1 /step] |

| | | | |
|---|---|---|---|
| **2851** | **[Special 3: Bias]** | | |
| | Adjusts the DC voltage of the discharge plate for special paper 3.<br>Thick 1 and Thick 2&Fine: 77 mm/sec | | |
| 001 | Separation DC: Thick 1: 1st Side | *ENG | [0 to 4000 / **2000** / 10 –V/step] |
| 002 | Separation DC: Thick 1: 2nd Side | *ENG | [0 to 4000 / **3000** / 10 –V/step] |
| 003 | Separation DC: Thick 1: 1st Side | *ENG | [0 to 4000 / **2000** / 10 –V/step] |

| | | | |
|---|---|---|---|
| **2852** | **[Special 3: Bias: BW]** | | |
| | Adjusts the current for the paper transfer roller for special paper 3 in black-and-white mode.<br>Thick 1 and Thick 2&Fine: 77 mm/sec | | |
| 001 | Paper Transfer: Thick 1: 1st Side | *ENG | [0 to 250 / **22** / 1 –μA /step] |
| 002 | Paper Transfer: Thick 1: 2nd Side | *ENG | |
| 003 | Paper Transfer: Plain: 1st Side | *ENG | [0 to 250 / **11** / 1 –μA /step] |

| | | | |
|---|---|---|---|
| **2857** | **[Special 3: Bias: FC]** | | |
| | Adjusts the current for the paper transfer roller for special paper 3 in full color mode.<br>Thick 1 and Thick 2&Fine: 77 mm/sec | | |
| 001 | Paper Transfer: Thick 1: 1st Side | *ENG | [0 to 250 / **30** / 1 –μA /step] |
| 002 | Paper Transfer: Thick 1: 2nd Side | *ENG | [0 to 250 / **33** / 1 –μA /step] |
| 003 | Paper Transfer: Plain: 1st Side | *ENG | [0 to 250 / **15** / 1 –μA /step] |

| | | | |
|---|---|---|---|
| **2861** | **[Special 3: Paper Size Correction]** | | |
| | Adjusts the size correction coefficient for the paper transfer roller current for each paper size. SP2852 and SP2857 are multiplied by these SP values.<br>Thick 1 and Thick 2&Fine: 77 mm/sec | | |
| 001 | Paper Transfer: Thick 1: 1st Side: S1 | *ENG | [100 to 600 / **100** / 5%/step]<br>S1 size ≥ 297 mm (Paper width) |
| 002 | Paper Transfer: Thick 1: 2nd Side: S1 | *ENG | |
| 005 | Paper Transfer: Thick 1: 1st Side: S2 | *ENG | [100 to 600 / **120** / 5%/step]<br>297 mm ≥ S2 size ≥ 275 mm (Paper width) |
| 006 | Paper Transfer: Thick 1: 2nd Side: S2 | *ENG | [100 to 600 / **120** / 5%/step]<br>297 mm ≥ S2 size ≥ 275 mm (Paper width) |
| 009 | Paper Transfer: Thick 1: 1st Side: S3 | *ENG | [100 to 600 / **140** / 5%/step]<br>275 mm ≥ S3 size ≥ 210 mm (Paper width) |

| | | | |
|---|---|---|---|
| 010 | Paper Transfer: Thick 1: 2nd Side: S3 | *ENG | [100 to 600 / **140** / 5%/step] 275 mm ≥ S3 size ≥ 210 mm (Paper width) |
| 013 | Paper Transfer: Thick 1: 1st Side: S4 | *ENG | [100 to 600 / **160** / 5%/step] 210 mm ≥ S4 size ≥ 148 mm (Paper width) |
| 014 | Paper Transfer: Thick 1: 2nd Side: S4 | *ENG | [100 to 600 / **160** / 5%/step] 210 mm ≥ S4 size ≥ 148 mm (Paper width) |
| 017 | Paper Transfer: Thick 1: 1st Side: S5 | *ENG | [100 to 600 / **180** / 5%/step] 148 mm ≥ S5 size (Paper width) |
| 018 | Paper Transfer: Thick 1: 2nd Side: S5 | *ENG | [100 to 600 / **180** / 5%/step] 148 mm ≥ S5 size (Paper width) |

| | | | |
|---|---|---|---|
| **2871** | **[Special 3: Leading Edge Correction]** Special 3 Paper: Leading Edge Correction | | |
| | Adjusts the correction to the paper transfer roller current at the paper leading edge in each mode. SP2852 and SP2857 are multiplied by these SP values. Thick 1 and Thick 2&Fine: 77 mm/sec<br>Note<br>▪ The paper leading edge area can be adjusted with SP2872. | | |
| 001 | Paper Transfer: Thick 1: 1st Side | *ENG | [0 to 400 / **100** / 5%/step] |
| 002 | Paper Transfer: Thick 1: 2nd Side | *ENG | |
| 003 | Paper Transfer: Thick 1: 1st Side | *ENG | [0 to 400 / **100** / 5%/step] |

| | | | |
|---|---|---|---|
| 005-008 | Adjusts the correction to the discharge plate current at the paper leading edge in each mode. SP2851 is multiplied by these SP values.<br>Note<br>▪ The paper leading edge area can be adjusted with SP2872. | | |
| 005 | Separation DC: Thick 1: 1st Side | *ENG | [0 to 400 / **100** / 5%/step] |
| 006 | Separation DC: Thick 1: 2nd Side | *ENG | |
| 007 | Separation DC: Thick 1: 1st Side | *ENG | [0 to 400 / **100** / 5%/step] |

| | | | |
|---|---|---|---|
| **2872** | **[Special 3: Switch Timing: Lead. Edge]** | | |
| | Adjusts the bias/ voltage switch timing of the paper transfer roller/ discharge plate at the paper leading edge between the erase margin area and the image area.<br>Thick 1 and Thick 2&Fine: 77 mm/sec | | |
| 001 | Paper Transfer: Plain: 1st Side | *ENG | [0 to 50 / **0** / 2 mm/step] |
| 002 | Paper Transfer: Plain: 2nd Side | *ENG | |
| 003 | Paper Transfer: Thick 1: 1st Side | *ENG | [0 to 50 / **0** / 2 mm/step] |
| 005 | Separation DC: Plain: 1st Side | *ENG | |
| 006 | Separation DC: Plain: 2nd Side | *ENG | |
| 007 | Separation DC: Fine: 1st Page | *ENG | [0 to 50 / **0** / 2 mm/step] |
| 008 | Separation DC: Thick 1: 1st Side | *ENG | |

| | | | |
|---|---|---|---|
| **2873** | **[Special 3: Trailing Edge Correction]** Special 3 Paper: Trailing Edge Correction | | |
| | Adjusts the correction to the paper transfer roller current for the paper trailing edge in each mode. SP2852 and SP2857 are multiplied by these SP values.<br>Thick 1 and Thick 2&Fine: 77 mm/sec<br>Note<br>▪ The paper trailing edge area can be adjusted with SP2874. | | |
| 001 | Paper Transfer: Thick 1: 1st Side | *ENG | [0 to 400 / **100** / 5%/step] |
| 002 | Paper Transfer: Thick 1: 2nd Side | *ENG | |
| 003 | Paper Transfer: Thick 1: 1st Side | *ENG | |
| 005 | Separation DC: Thick 1: 1st Side | *ENG | |
| 006 | Separation DC: Thick 1: 2nd Side | *ENG | |
| 007 | Separation DC: Plain: 1st Side | *ENG | |

| | | | |
|---|---|---|---|
| **2874** | **[Special 3: Switch Timing: Trail. Edge]** | | |
| | Adjusts the bias/voltage switch timing of the paper transfer roller/discharge plate at the paper trailing edge between the erase margin area and the image area.<br>Thick 1 and Thick 2&Fine: 77 mm/sec | | |
| 001 | Paper Transfer: Plain: 1st Side | *ENG | [0 to 50 / **0** / 2 mm/step] |
| 002 | Paper Transfer: Thick 1: 2nd Side | *ENG | |
| 003 | Paper Transfer: Thick 1: 1st Side | *ENG | |
| 005 | Separation DC: Thick 1: 1st Side | *ENG | |
| 006 | Separation DC: Thick 1: 2nd Side | *ENG | |
| 007 | Separation DC: Thick 1: 1st Side | *ENG | |

| 2880 | [Special 3: Environment Correction] | | |
|---|---|---|---|
| 001 | Separation DC: Plain: 1st Side | *ENG | [1 to 60 / **26** / 1 /step] |
| 002 | Separation DC: Plain: 2nd Side | *ENG | [1 to 60 / **32** / 1 /step] |
| 003 | Paper Transfer: Plain: BW: 1st Side | *ENG | [1 to 60 / **11** / 1 /step] |
| 004 | Paper Transfer: Plain: BW:2nd Side | *ENG | |
| 005 | Paper Transfer: Plain: FC: 1st Side | *ENG | [1 to 60 / **11** / 1 /step] |
| 006 | Paper Transfer: Plain: FC:2nd Side | *ENG | |
| 007 | Separation DC: Plain: 1st Side | *ENG | [1 to 60 / **26** / 1 /step] |
| 009 | Paper Transfer: 1200: BW: 1st Side | *ENG | [1 to 60 / **11** / 1 /step] |
| 011 | Paper Transfer: 1200: FC: 1st Side | *ENG | [1 to 60 / **1** / 1 /step] |

| 2901 | [OPC Drum Brake Time] | | |
|---|---|---|---|
| | Adjusts the time when the OPC drum motor reverses from normal rotation after job end. **DFU**<br>Plain: 154 mm/sec, Thick 1 and Thick 2&Fine: 77 mm/sec | | |
| 001 | Plain | *ENG | [300 to 1500 / **500** / 10 msec/step] |
| 002 | Thick 1 | *ENG | |
| 003 | Thick 2 & FINE | *ENG | |

| 2902 | [OPC Drum Reverse Time] | | |
|---|---|---|---|
| | Adjusts the time for how long the OPC drum motor reverses after job end. **DFU** | | |
| 001 | All: BW | *ENG | [0 to 200 / **30** / 10 msec/step] |
| 002 | All: FC | *ENG | [0 to 200 / **30** / 10 msec/step] |

| | | | |
|---|---|---|---|
| **2903** | **[Image Transfer Roller Brake Time]** | | |
| | Adjusts the time when the image transfer belt motor reverses from normal rotation after job end. **DFU**<br>Plain: 154 mm/sec, Thick 1 and Thick 2&Fine: 77 mm/sec | | |
| 003 | Plain | *ENG | [300 to 1500 / **500** / 10 msec/step] |
| 004 | Thick 1 | *ENG | |
| 005 | Thick 2 & FINE | *ENG | |

| | | | |
|---|---|---|---|
| **2904** | **[OPC Drum Reverse Time]** | | |
| | Adjusts the time for how long the image transfer belt motor reverses after job end. **DFU** | | |
| 003 | All | *ENG | [0 to 200 / **30** / 10 msec/step] |

| | | | |
|---|---|---|---|
| **2906** | **[Phase Angle]** | | |
| | **DFU** | | |
| 001 | Y Drum | *ENG | [0 to 359 / **0** / 1 deg/step] |
| 002 | C Drum | *ENG | |
| 003 | M Drum | *ENG | |
| 004 | K Drum | *ENG | |
| 005 | Stop Position | *ENG | [0 to 60 / **0** / 6 deg/step] |

| | | | |
|---|---|---|---|
| **2906** | **[Amplitude Setting]** | | |
| | **DFU** | | |
| 006 | Y Drum | *ENG | [0 to 100 / **0.0** / 0.1 μm/step] |
| 007 | C Drum | | |
| 008 | M Drum | | |
| 009 | K Drum | | |

| | | | |
|---|---|---|---|
| **2907** | **[ACS Setting (FC to Bk)]** | | |
| | Adjusts the threshold for moving away the image transfer belt from the color PCUs. This SP moves the image transfer belt away from the color PCUs when the number of B/W image printouts reaches the number of sheets specified with this SP after consecutive full color image printouts in the full color mode. If this SP is set to "0", the image transfer belt does not move away. | | |
| 001 | Continuous Bk Pages | *ENG | [0 to 10 / **0** / 1 sheet/step] |

| | | | |
|---|---|---|---|
| **2908** | **[Gain Adjust]** Gain Adjustment of Image Transfer Belt Motor | | |
| | **DFU** | | |
| 001 | 230 mm/sec | *ENG | [0 or 1 / **0** / 1/step]]<br>0: High speed (Low level)<br>1: Low speed (High level) |
| 003 | 115 mm/sec | *ENG | |
| 004 | 77 mm/sec | *ENG | |

| | | | |
|---|---|---|---|
| **2909** | **[Motor Start Control]** | | |
| | Not used | | |
| 001 | On | ENG | [0 to 1 / **0** / 1 sheet/step]<br>0: normal, 1: synchro |

| | | | |
|---|---|---|---|
| **2910** | **[Motor Stop Control]** | | |
| | Not used | | |
| 001 | On | ENG | [0 to 1 / **0** / 1 sheet/step]<br>0: normal, 1: synchro |

| | | | |
|---|---|---|---|
| **2911** | **[Offset Angle]** | | |
| 001 | Y Drum | *ENG | [0 to 359 / **0** / 1 deg/step] |
| 002 | C Drum | *ENG | |
| 003 | M Drum | *ENG | |
| 004 | K Drum | *ENG | |

| | | | |
|---|---|---|---|
| **2912** | **[Offset Amplitude Setting]** | | |
| 001 | Y Drum | *ENG | [0 to 100 / **0.0** / 0.1 μm/step] |
| 002 | C Drum | *ENG | |
| 003 | M Drum | *ENG | |
| 004 | K Drum | *ENG | |
| 005 | | | |

| **2913** | **[Drum Control]** | | |
|---|---|---|---|
| 001 | Rotation Direction | *ENG | [0 or 1 / **1** / 1 /step] |

| **2914** | **[Sutter Motor]** | | |
|---|---|---|---|
| 001 | Delay Time Open | *ENG | **DFU**<br>[1 to 50 / **38** / 1 msec/step] |
| 002 | Delay Time Close | *ENG | |
| 003 | Sutter Open | *ENG | Opens the shutter on the laser optics housing unit manually for test purposes. |
| 004 | Sutter Close | *ENG | Closes the shutter on the laser optics housing unit manually for test purposes. |
| 005 | Brake Open | *ENG | [0 to 200 / **100** / 10 msec/step] |
| 006 | Brake Close | *ENG | [0 to 200 / **100** / 10 msec/step] |
| 007 | Existence | *ENG | [0 or 1 / **1** / 1 msec/step] |

| **2920** | **[Transfer Motor Control]** | | |
|---|---|---|---|
| 001 | 0: Encorder 1 :FG | *ENG | [0 or 1 / **0** / 1 /step] |
| 002 | SC443 Count | *ENG | [0 to 3 / **0** / 1 /step] |

| **2930** | **[SecondaryFB: Threshold]** Paper Transfer Roller Feed-back: Threshold Adjustment | | |
|---|---|---|---|
| | Adjusts the threshold between high resistance (division 1) and low resistance (division 2) at the paper transfer roller. This SP affects SP2931 to SP2939. | | |
| 001 | Voltage | *ENG | [0 to 7000 / **6000** / 10 –V/step] |

| **2960** | **[Process Interval]** | | |
|---|---|---|---|
| 001 | Additional Time | *ENG | [0 to 10 / **0** / 1 sec/step] |

| **2970** | **[Cleaning After JOB]** | | |
|---|---|---|---|
| 001 | No Refresh | *ENG | [0 or 1 / **0** / 1 /step] |
| 002 | Refresh | *ENG | [0 or 1 / **1** / 1 /step] |

| **2971** | **[T1 Non Image Area ON Timing]** | | |
|---|---|---|---|
| 001 | | *ENG | [–270 to 180 / **0** / 10 msec/step] |

## *SP3-XXX (Process)*

| **3011** | **[Process Cont. Manual Execution]** | | |
|---|---|---|---|
| 001 | Normal | - | [0 or 1 / **0** / 1 /step]<br>Executes the normal process control manually (potential control).<br>Check the result with SP3-325-001 and 3-012-001 after executing this SP. |
| 002 | Density Adjustment | - | [0 or 1 / **0** / 1 /step ]<br>Executes the toner density adjustment manually. |
| 003 | Pre-ACC | - | [0 or 1 / **0** / 1 /step ]<br>Executes the process control that is normally done before ACC.<br>The type of process control is selected with SP3-041-004. |
| 004 | Full MUSIC | - | [0 or 1 / **0** / 1 /step ]<br>Executes the process control that is normally done at the same time as MUSIC.<br>This SP does the MUSIC (line position adjustment) twice. |
| 005 | Normal MUSIC | - | [0 or 1 / **0** / 1 /step ]<br>Executes the process control that is normally done at the same time as MUSIC.<br>This SP does the MUSIC (line position adjustment) once. |

| | | | |
|---|---|---|---|
| **3012** | **[Process Cont. Check Result]** Process Control Self-check Result | | |
| | Displays the result of the latest process control self-check.<br>All colors are displayed. The results are displayed in the order “Y C M K”<br>e.g., 11 (Y) 99 (C) 11 (M) 11 (K): The self-check for Cyan failed but the others were successful.<br>See the “Error Condition Tables” in the Process Control Error section for details. | | |
| 001 | History: Latest | *ENG | [1111 to 99999999 / **-** / 1/step] |
| 002 | Result: Latest 1 | *ENG | |
| 003 | Result: Latest 2 | *ENG | |
| 004 | Result: Latest 3 | *ENG | |
| 005 | Result: Latest 4 | *ENG | |
| 006 | Result: Latest 5 | *ENG | |
| 007 | Result: Latest 6 | *ENG | |
| 008 | Result: Latest 7 | *ENG | |
| 009 | Result: Latest 8 | *ENG | |
| 010 | Result: Latest 9 | *ENG | |

| **3013** | **[T Sensor Initial Set: Execution]** Developer Initialization Setting | | |
|---|---|---|---|
| 001 | Execution: ALL | - | [0 or 1 / **0** / 1/step] |
| 002 | Execution: COL | - | |
| 003 | Execution: Bk | - | |
| 004 | Execution: M | - | |
| 005 | Execution: C | - | |
| 006 | Execution: Y | - | |

| **3014** | **[T Sensor Initial Set Result: Display]** Developer Initialization Result: Display | | |
|---|---|---|---|
| 001 | Display: YCMK | *ENG | [0 to 9999 / **-** / 1 /step ]<br>1: Success<br>2 to 9: Failure |
| | Displays the developer initialization result. See the “Error Condition Tables” in the Process Control Error section for details on the meaning of each code.<br>All colors are displayed. Values are displayed in the order Y C M Bk.<br>e.g., 1 (Y) 2 (C) 1 (M) 1 (Bk): Initialization of Cyan failed but the others succeeded. | | |

| **3015** | **[Forced Toner Supply: Execute]** Forced Toner Supply ([Color]) | | |
|---|---|---|---|
| 001 | Execution: ALL | - | [0 or 1 / **0** / 1 /step]<br>Executes the manual toner supply to the development unit. |
| 002 | Execution: COL | - | |
| 003 | Execution: Bk | - | |
| 004 | Execution: M | - | |
| 005 | Execution: C | - | |
| 006 | Execution: Y | - | |

| | | | |
|---|---|---|---|
| **3016** | **[Forced Toner Supply: Setting]** Forced Toner Supply Setting ([Color]) | | |
| | Specifies the manual toner supply time for each color. | | |
| 001 | Supply Time: Bk | *ENG | [0 to 30 / **4** / 1 sec/step] |
| 002 | Supply Time: M | *ENG | |
| 003 | Supply Time: C | *ENG | |
| 004 | Supply Time: Y | *ENG | |

| | | | |
|---|---|---|---|
| **3020** | **[Vt Limit Error]** | | |
| | **DFU** | | |
| 001 | Delta Vt Threshold | *ENG | [0 to 5 / **5** / 0.01 V/step] |
| 002 | Upper Threshold | *ENG | [0 to 5 / **4.7** / 0.01 V/step] |
| 003 | Threshold Number of Upper counter | *ENG | [0 to 99 / **20** / 1 time/step] |
| 004 | Lower Threshold | *ENG | [0 to 5 / **0.5** / 0.01 V/step] |
| 005 | Number of Lower counter | *ENG | [0 to 99 / **10** / 1 times/step] |
| 006 | Upper Counter: Bk | *ENG | [0 to 99 / **0** / 1 times/step] |
| 007 | Upper Counter: M | *ENG | |
| 008 | Upper Counter: C | *ENG | |
| 009 | Upper Counter: Y | *ENG | |
| 010 | Lower Counter: Bk | *ENG | |
| 011 | Lower Counter: M | *ENG | |
| 012 | Lower Counter: C | *ENG | |
| 013 | Lower Counter: Y | *ENG | |

| | | | |
|---|---|---|---|
| **3021** | **[TD Sensor Initial Set]** Developer Initialization Setting | | |
| | Specifies the developer agitation time for each color at the developer initialization. **DFU** | | |
| 001 | Agitation Time: Bk | *ENG | [0 to 200 / **30** / 1 sec/step] |
| 002 | Agitation Time: M | *ENG | |
| 003 | Agitation Time: C | *ENG | |
| 004 | Agitation Time: Y | *ENG | |
| 005-008 | Sets the execution flag of the developer initialization for each color. **DFU** | | |
| 005 | Execution Flag: Bk | *ENG | [0 or 1 / **0** / 1/step]<br>0: Flag OFF, 1: Flag ON<br>This flag is cleared after executing TD sensor initialization. |
| 006 | Execution Flag: M | *ENG | |
| 007 | Execution Flag: C | *ENG | |
| 008 | Execution Flag: Y | *ENG | |
| 009 | Prohibition | *ENG | Enables or disables developer initialization. **DFU**<br>[0 or 1 / **0** / 1/step]<br>0: Enable, 1: Disable |

| | | | |
|---|---|---|---|
| **3022** | **[Toner Replenishment Mode] DFU** | | |
| | Specifies the toner supply time for each color in the toner supply mode. | | |
| 001 | Number: Bk | *ENG | [0 to 30 / **8** / 1 sec/step] |
| 002 | Number: M | *ENG | [0 to 30 / **6** / 1 sec/step] |
| 003 | Number: C | *ENG | |
| 004 | Number: Y | *ENG | |
| 005-008 | Sets the execution flag for the toner supply mode for each color. | | |
| 005 | Execution Flag: Bk | *ENG | [0 or 1 / **0** / 1/step]<br>0: Flag OFF, 1: Flag ON<br>This flag is cleared after executing TD sensor initialization. |
| 006 | Execution Flag: M | *ENG | |
| 007 | Execution Flag: C | *ENG | |
| 008 | Execution Flag: Y | *ENG | |

| | | | |
|---|---|---|---|
| **3041** | **[Process Control Type]** | | |
| 001 | Voltage Control | *ENG | [0 or 1 / **1** / 1/step ] Alphanumeric<br>0: FIXED (Use the fixed values for the charge DC bias and development DC bias set with SP2-005 and SP2-229.)<br>1: CONTROL |
| | Enables or disables potential control. | | |
| 002 | LD Power Control | *ENG | [0 or 1 / **1** / 1/step] Alphanumeric<br>0: FIXED (at the value in SP2221-xxx)<br>1: CONTROL (adjusted by process control) |
| | Selects the LD power control mode. | | |

| | | | |
|---|---|---|---|
| 004 | Pre-ACC | *ENG | [0 to 2 / **2** / 1/step]<br>0: Not Executed<br>1: Process Control<br>2: TC Control (TD Adjustment)<br>3: Not used |
| | Selects the process control mode that is done before ACC. | | |

| | | | |
|---|---|---|---|
| **3043** | **[TD Adjustment Mode]** | | |
| 001 | Repeat Number: Power ON | *ENG | [0 to 9 / **4** / 1 time/step] |
| | Specifies the maximum number of repeats of the toner density adjustment at power on.<br>0: Disabled, 1 to 3: Repeat number,<br>4: Repeat three times (No consumption mode)<br>5: Repeat three times (Toner is supplied only when the toner density is too low, and toner is consumed only when the toner density is too dark.)<br>6 to 9: Disabled | | |
| 002 | Repeat Number: Initialization | *ENG | [0 to 9 / **3** / 1 time/step] |
| | Specifies the maximum number of repeats of the toner density adjustment at the developer initialization.<br>0: Disabled, 1 to 3: Repeat number,<br>4: Repeat three times (No consumption mode)<br>5: Repeat three times (Toner is supplied only when the toner density is too low, and toner is consumed only when the toner density is too dark.)<br>6 to 9: Disabled | | |

| | | | |
|---|---|---|---|
| 003 | Repeat Number: Non-use | *ENG | [0 to 9 / **0** / 1 time/step] |
| | Specifies the maximum number of repeats of the toner density adjustment in stand by mode.<br>0: Disabled, 1 to 3: Repeat number,<br>4: Repeat three times (No consumption mode)<br>5: Repeat three times (Toner is supplied only when the toner density is too low, and toner is consumed only when the toner density is too dark.)<br>6 to 9: Disabled | | |
| 004 | Repeat Number: ACC | *ENG | [0 to 9 / **3** / 1 time/step] |
| | Specifies the maximum number of repeats of the toner density adjustment at ACC.<br>0: Disabled, 1 to 3: Repeat number,<br>4: Repeat three times (No consumption mode)<br>5: Repeat three times (Toner is supplied only when the toner density is too low, and toner is consumed only when the toner density is too dark.)<br>6 to 9: Disabled | | |
| 005 | Repeat Number: Recovery | *ENG | [0 to 9 / **0** / 1 time/step] |
| | Not used | | |
| 006 | Repeat Number: Job End | *ENG | [0 to 9 / **4** / 1 time/step] |
| | Specifies the maximum number of repeats of the toner density adjustment at job end.<br>0: Disabled, 1 to 3: Repeat number,<br>4: Repeat three times (No consumption mode)<br>5: Repeat three times (Toner is supplied only when the toner density is too low, and toner is consumed only when the toner density is too dark.)<br>6 to 9: Disabled | | |

| | | | |
|---|---|---|---|
| 007 | Repeat: Interrupt | *ENG | [0 to 9 / **0** / 1 time/step] |
| | Specifies the maximum number of repeats of the toner density adjustment during printing. **DFU** | | |
| 008 | Toner Supply Coefficient | *ENG | [0 to 25.5 / **10** / 0.1 sec/step] |
| | Adjusts the time for the toner supply mode when a toner density is detected to be low. | | |
| 009 | Consumption pattern: Bk | *ENG | [0 to 255 / **5** / 1 time/step] |
| | Specifies the belt mark generating time for checking the black toner density when toner density is detected to be low at the toner density adjustment. | | |
| 010 | Consumption pattern: M | *ENG | [0 to 255 / **5** / 1 time/step] |
| | Specifies the belt mark generating time for checking the magenta toner density when toner density is detected to be low at the toner density adjustment. | | |
| 011 | Consumption pattern: C | *ENG | [0 to 255 / **5** / 1 time/step] |
| | Specifies the belt mark generating time for checking the cyan toner density when toner density is detected to be low at the toner density adjustment. | | |
| 012 | Consumption pattern: Y | *ENG | [0 to 255 / **5** / 1 time/step] |
| | Specifies the belt mark generating time for checking the yellow toner density when toner density is detected to be low at the toner density adjustment. | | |
| 013 | T1 Bias: Bk | *ENG | [0 to 80 / **20** / 1 µA/step] |
| | Adjusts the image transfer belt bias for Black. | | |
| 014 | T1 Bias: M | *ENG | [0 to 80 / **20** / 1 µA/step] |
| | Adjusts the image transfer belt bias for Magenta. | | |
| 015 | T1 Bias: C | *ENG | [0 to 80 / **22** / 1 µA/step] |
| | Adjusts the image transfer belt bias for Cyan. | | |

| | | | |
|---|---|---|---|
| 016 | T1 Bias: Y | *ENG | [0 to 80 / **30** / 1 µA/step] |
| | Adjusts the image transfer belt bias for Yellow. | | |
| 017 | Developer Mixing Time | *ENG | [0 to 250 / **10** / 1 sec/step] |
| | Specifies the developer mixing time at the toner density adjustment. | | |
| 018 | Consumption Pattern: LD: DUTY: Bk | *ENG | [0 to 15 / **15** / 1 /step] |
| | Adjusts the LD duty for the toner consumption mode at the toner density adjustment.<br>In toner consumption mode, toner is discharged when the detected development gamma values (SP3611-001) exceed the target values (SP3611-005) by more than the specified thresholds (SP3239-009). | | |
| 019 | Consumption Pattern: LD: DUTY: M | *ENG | [0 to 15 / **15** / 1 /step] |
| | Adjusts the LD duty for the toner consumption mode at the toner density adjustment.<br>In toner consumption mode, toner is discharged when the detected development gamma values (SP3611-002) exceed the target values (SP3611-006) by more than the specified thresholds (SP3239-009). | | |
| 020 | Consumption Pattern: LD: DUTY: C | *ENG | [0 to 15 / **15** / 1 /step] |
| | Adjusts the LD duty for the toner consumption mode at the toner density adjustment.<br>In toner consumption mode, toner is discharged when the detected development gamma values (SP3611-003) exceed the target values (SP3611-007) by more than the specified thresholds (SP3239-009). | | |
| 021 | Consumption Pattern: LD: DUTY: Y | *ENG | [0 to 15 / **15** / 1 /step] |
| | Adjusts the LD duty for the toner consumption mode at the toner density adjustment.<br>In toner consumption mode, toner is discharged when the detected development gamma values (SP3611-004) exceed the target values (SP3611-008) by more than the specified thresholds (SP3239-009). | | |

| | | | |
|---|---|---|---|
| **3044** | **[Toner Supply Type]** Toner Supply Type ([Color]) | | |
| | Selects the toner supply method type. | | |
| 001 | Bk | *ENG | [0 to 3 / **2** / 1/step] Alphanumeric<br>0: FIXED (with the supply rates stored with SP 3401)<br>1: PID (Vtref_Fixed)<br>2: PID (Vtref_Control)<br>3: Not used |
| 002 | M | *ENG | |
| 003 | C | *ENG | |
| 004 | Y | *ENG | |

| | | | |
|---|---|---|---|
| **3045** | **[Toner End Detection: Set]** | | |
| | Enables/disables the toner alert display on the LCD. | | |
| 001 | ON/OFF | *ENG | [0 or 1 / **0** / 1/step]<br>0: Detect, 1: Not Detect |

| | | | |
|---|---|---|---|
| **3101** | **[Toner End/Near End]** | | |
| | Displays the amount of each color toner. **DFU** | | |
| 001 | Toner Replenishment: Bk | *ENG | [1 to 600 / **510** / 1 g/step] |
| 002 | Toner Replenishment: M | *ENG | [1 to 600 / **400** / 1 g/step] |
| 003 | Toner Replenishment: C | *ENG | |
| 004 | Toner Replenishment: Y | *ENG | |
| 005-008 | Displays the consumed amount of each color toner. | | |
| 005 | Toner Consumption: Bk | *ENG | [0 to 3000 / **0** / 0.001 g/step] |
| 006 | Toner Consumption: M | *ENG | |
| 007 | Toner Consumption: C | *ENG | |
| 008 | Toner Consumption: Y | *ENG | |

| | | | |
|---|---|---|---|
| 009-012 | Displays the remaining amount of each color toner. These are calculated by the operating times of the toner supply pumps. | | |
| 009 | Toner Remaining: Bk | *ENG | [–50000 to 600 / **0** / 0.001 g/step] |
| 010 | Toner Remaining: M | *ENG | |
| 011 | Toner Remaining: C | *ENG | |
| 012 | Toner Remaining: Y | *ENG | |
| 013-016 | Adjusts the threshold of toner near end for each color. The toner near end message appears on the LCD when the remaining toner amount reaches this threshold. When one of these SPs (SP3-101-009 to 012 or -032 to -035) reaches this threshold, toner near end is detected. | | |
| 013 | Near End Threshold: Bk | *ENG | [0 to 600 / **50** / 1 g/step] |
| 014 | Near End Threshold: M | *ENG | |
| 015 | Near End Threshold: C | *ENG | |
| 016 | Near End Threshold: Y | *ENG | |
| 017-020 | **DFU** | | |
| 017 | Cartridge Error Threshold: Bk | *ENG | [–50000 to 0 / **–50000** / 1 g/step] |
| 018 | Cartridge Error Threshold: M | *ENG | |
| 019 | Cartridge Error Threshold: C | *ENG | |
| 020 | Cartridge Error Threshold: Y | *ENG | |

| | | | |
|---|---|---|---|
| 021 | Delta Vt Threshold | *ENG | [0 to 5 / **0.5** / 0.01 V/step] |
| | This SP is the threshold for toner end. Delta Vt: Vt-Vtref<br>When both this SP and SP3-101-026 occur at same time, toner end is determined. | | |
| 022-025 | Displays the total delta Vt (Vt-Vtref) value for each color.These are calculated by pixel counting. | | |
| 022 | Delta Vt Sum: Bk | *ENG | [0 to 655 / **0** / 0.01 V/step] |
| 023 | Delta Vt Sum: M | *ENG | |
| 024 | Delta Vt Sum: C | *ENG | |
| 025 | Delta Vt Sum: Y | *ENG | |
| 026 | Delta Vt Sum Threshold | *ENG | [0 to 255 / 10 / 1 V/step] |
| 027 | Gamma Threshold: Coefficient | *ENG | Not used |
| 028-031 | Displays the consumed toner amount calculated with the pixel count for each color. | | |
| 028 | Pixel: Consumption: Bk | *ENG | [0 to 3000 / **0** / 0.001 g/step] |
| 029 | Pixel: Consumption: M | *ENG | |
| 030 | Pixel: Consumption: C | *ENG | |
| 031 | Pixel: Consumption: Y | *ENG | |
| 032-035 | Displays the remaining toner amount for each color, using pixel count. | | |
| 032 | Pixel: Remaining : Bk | *ENG | [-50000 to 600 / **0** / 0.001 g/step] |
| 033 | Pixel: Remaining : M | *ENG | |
| 034 | Pixel: Remaining : C | *ENG | |
| 035 | Pixel: Remaining : Y | *ENG | |

| | | | |
|---|---|---|---|
| 036-039 | Adjusts the threshold of toner end for each color. | | |
| 036 | End Threshold: Bk | *ENG | Not used |
| 037 | End Threshold: M | *ENG | |
| 038 | End Threshold: C | *ENG | |
| 039 | End Threshold: Y | *ENG | |
| 040-043 | Displays the pixel M/A for each color. | | |
| 040 | Pixel M/A: Bk | *ENG | [0 to 1 / **0.4** / 0.001 mg/cm$^2$/step] |
| 041 | Pixel M/A: M | *ENG | |
| 042 | Pixel M/A: C | *ENG | |
| 043 | Pixel M/A: Y | *ENG | |
| 044 | Delta Vt Threshold Before Near End | *ENG | Adjusts the delta Vt (Vt – Vtref) of toner end before toner near end is detected. [0 to 5 / **0.5** / 0.01 V/step] |
| 045 | Delta Vt Sum Threshold Before Near End | *ENG | Adjusts the total delta Vt (Vt – Vtref) of toner end before toner near end is detected. [0 to 255 / **10** / 1 V/step] |
| 046-049 | Displays the latest mohno off time. | | |
| 046 | Mohno Off Time: Bk | *ENG | [0 to 0 x FFFFFFFF / **0** / 1 sec/step] |
| 047 | Mohno Off Time: M | *ENG | |
| 048 | Mohno Off Time: C | *ENG | |
| 049 | Mohno Off Time: Y | *ENG | |

| | | | |
|---|---|---|---|
| **3102** | **[Toner End Recovery]** | | |
| | Adjusts the number of times toner supply is attempted for each color when the TD sensor continues to detect toner end during toner recovery. | | |
| 001 | Repeat: Bk | *ENG | [1 to 20 / **5** / 1 time/step] |
| 002 | Repeat: M | *ENG | |
| 003 | Repeat: C | *ENG | |
| 004 | Repeat: Y | *ENG | |

| | | | |
|---|---|---|---|
| **3131** | **[TE Count m: Display]** | | |
| | Display the number of toner end detections for each color. | | |
| 001 | Bk | *ENG | [0 to 99 / **0** / 1 time/step] |
| 002 | M | *ENG | |
| 003 | C | *ENG | |
| 004 | Y | *ENG | |

| | | | |
|---|---|---|---|
| **3201** | **[TD Sensor: Vt Display]** | | |
| | Display the current voltage of the TD sensor for each color. | | |
| 001 | Current: Bk | *ENG | [0 to 5.5 / **0.01** / 0.01 V/step] |
| 002 | Current: M | *ENG | |
| 003 | Current: C | *ENG | |
| 004 | Current: Y | *ENG | |

| | | | |
|---|---|---|---|
| **3211** | **[Vt Shift: Display/Set]** | | |
| | Adjusts the Vt correction value for each line speed.<br>Thick 1 and Thick 2&Fine: 77 mm/sec | | |
| 001 | Thick 1 Shift: Bk | *ENG | [0 to 5 / **0.46** / 0.01 V/step] |
| 002 | Thick 1 Shift: M | *ENG | |
| 003 | Thick 1 Shift: C | *ENG | |
| 004 | Thick 1 Shift: Y | *ENG | |
| 005 | Thick 2 & FINE Shift: Bk | *ENG | |
| 006 | Thick 2 & FINE Shift: M | *ENG | |
| 007 | Thick 2 & FINE Shift: C | *ENG | |
| 008 | Thick 2 & FINE Shift: Y | *ENG | |

| | | | |
|---|---|---|---|
| **3221** | **[Vtcnt: Display/Set]** | | |
| | Displays or adjusts the current Vtcnt value for each color. | | |
| 001 | Current: Bk | *ENG | [2 to 5 / **3.86** / 0.01 V/step] |
| 002 | Current: M | *ENG | |
| 003 | Current: C | *ENG | |
| 004 | Current: Y | *ENG | |

| | | | |
|---|---|---|---|
| 005-008 | Displays or adjusts the Vtcnt value for each color at developer initialization.<br>**DFU** | | |
| 005 | Initial: Bk | *ENG | [2 to 5 / **3.86** / 0.01 V/step] |
| 006 | Initial: M | *ENG | |
| 007 | Initial: C | *ENG | |
| 008 | Initial: Y | *ENG | |

| | | | |
|---|---|---|---|
| **3222** | **[Vtref: Display/Set]** | | |
| | Displays or adjusts the current Vtref value for each color. | | |
| 001 | Current: Bk | *ENG | [0 to 5.5 / **3** / 0.01 V/step] |
| 002 | Current: M | *ENG | |
| 003 | Current: C | *ENG | |
| 004 | Current: Y | *ENG | |
| 005-008 | Displays or adjusts the Vtref value for each color at developer initialization.<br>**DFU** | | |
| 005 | Initial: Bk | *ENG | [0 to 5.5 / **3** / 0.01 V/step] |
| 006 | Initial: M | *ENG | |
| 007 | Initial: C | *ENG | |
| 008 | Initial: Y | *ENG | |

| | | | |
|---|---|---|---|
| 009-012 | Displays and adjusts Vtref correction by pixel coverage for each color. **DFU** | | |
| 009 | Pixel Correction: Bk | *ENG | [-5 to 5.5 / **0** / 0.01 V/step] |
| 010 | Pixel Correction: M | *ENG | |
| 011 | Pixel Correction: C | *ENG | |
| 012 | Pixel Correction: Y | *ENG | |

| | | | |
|---|---|---|---|
| **3223** | **[Vtref Upper Lower: Set] DFU** | | |
| | Adjusts the lower or upper limit value of Vtref for each color. | | |
| 001 | Lower: Bk | *ENG | [0 to 5 / **2** / 0.01 V/step] |
| 002 | Lower: M | *ENG | |
| 003 | Lower: C | *ENG | |
| 004 | Lower: Y | *ENG | |
| 005 | Upper: Bk | *ENG | [0 to 5 / **4** / 0.01 V/step] |
| 006 | Upper: M | *ENG | |
| 007 | Upper: C | *ENG | |
| 008 | Upper: Y | *ENG | |
| 009 | Initial TC | *ENG | Adjusts the initial toner concentration.<br>[1 to 15 / **7** / 0.1 wt%/step] |
| 010 | Upper: TC | *ENG | Adjusts the upper limit of the toner concentration.<br>[1 to 15 / **9.5** / 0.1 wt%/step] |
| 011 | Lower: TC | *ENG | Adjusts the lower limit of the toner concentration.<br>[1 to 15 / **4** / 0.1 wt%/step] |

| | | | |
|---|---|---|---|
| 012 | Upper Sensitivity | *ENG | Adjusts the upper limit of the TD sensor sensitivity.<br>[0.2 to 0.5 / **0.44** / 0.001 V/wt% /step] |
| 013 | Lower Sensitivity | *ENG | Adjusts the lower limit of the TD sensor sensitivity.<br>[0.2 to 0.5 / **0.209** / 0.001 V/wt% /step] |
| 014 | Toner Density Between H and M | *ENG | [1 to 10 / **3.5** / 0.1 wt%/step] |
| 015 | Toner Density Between M and L | *ENG | [1 to 10 / **3.5** / 0.1 wt%/step] |

| | | | |
|---|---|---|---|
| **3224** | **[Vtref Correction: Pixel] DFU** | | |
| | Adjusts the coefficient of Vtref correction for each coverage and color. | | |
| 001 | Low Coverage Coefficient: Bk | *ENG | [0 to 5 / **1** / 0.1 /step] |
| 002 | Low Coverage Coefficient: M | *ENG | |
| 003 | Low Coverage Coefficient: C | *ENG | |
| 004 | Low Coverage Coefficient: Y | *ENG | |
| 005 | High Coverage Coefficient: Bk | *ENG | [0 to 5 / **1** / 0.01 V/step] |
| 006 | High Coverage Coefficient: M | *ENG | [0 to 5 / **0.5** / 0.01 V/step] |
| 007 | High Coverage Coefficient: C | *ENG | |
| 008 | High Coverage Coefficient: Y | *ENG | |
| 009 | Low Coverage: Threshold | *ENG | Adjusts the threshold of the low coverage.<br>[0 to 20 / **3** / 0.1 %/step] |

| | | | |
|---|---|---|---|
| 010 | High Coverage: Threshold | *ENG | Adjusts the threshold of the high coverage.<br>[0 to 100 / **60** / 1 %/step] |
| 011 | TC Upper Limit Correction | *ENG | [0 to 5 / **0** / 0.1 wt%/step] |
| 012 | Upper Limit TC: Display: Bk | *ENG | [1 to 15 / **10** / 0.1 wt% /step] |
| 013 | Upper Limit TC: Display: M | *ENG | |
| 014 | Upper Limit TC: Display: C | *ENG | |
| 015 | Upper Limit TC: Display: Y | *ENG | |
| 016 | Process Control Execution Threshold | *ENG | [0 to 255 / **50** / 1 time/step] |

| | | | |
|---|---|---|---|
| **3231** | **[Toner Supply: Setting]** | | |
| | Adjusts the coefficient of the toner supply time for each color. **DFU** | | |
| 001 | Replacement Coefficient:Bk | *ENG | [0.5 to 9.99 / **1.66** / 0.01 /step] |
| 002 | Replacement Coefficient: M | *ENG | [0.5 to 9.99 / **1.66**/ 0.01 /step] |
| 003 | Replacement Coefficient: C | *ENG | [0.5 to 9.99 / **1.6** / 0.01 /step] |
| 004 | Replacement Coefficient: Y | *ENG | [0.5 to 9.99 / **1.66** / 0.01 /step] |

| | | | |
|---|---|---|---|
| **3232** | **[Toner Supply Coefficient: Setting] DFU** | | |
| 001 | Vt Proportion: Bk | *ENG | [0 to 2550 / **50** / 1 /step] |
| 002 | Vt Proportion: M | *ENG | |
| 003 | Vt Proportion: C | *ENG | |
| 004 | Vt Proportion: Y | *ENG | |

| | | | |
|---|---|---|---|
| 005 | Pixel Proportion: Bk | *ENG | [0 to 2.55 / **0.47** / 0.01 /step] |
| 006 | Pixel Proportion: M | *ENG | |
| 007 | Pixel Proportion: C | *ENG | |
| 008 | Pixel Proportion: Y | *ENG | |
| 009 | Vt Integral Control: Bk | *ENG | [0 to 2550 / **500** / 1 /step] |
| 010 | Vt Integral Control: M | *ENG | |
| 011 | Vt Integral Control: C | *ENG | |
| 012 | Vt Integral Control: Y | *ENG | |
| 013 | Vt Sum Times: Bk | *ENG | [1 to 255 / **20** / 1 time/step] |
| 014 | Vt Sum Times: M | *ENG | |
| 015 | Vt Sum Times: C | *ENG | |
| 016 | Vt Sum Times: Y | *ENG | |

| **3233** | **[Pixel Proportion Coefficient 2: Setting] DFU** | | |
|---|---|---|---|
| 001 | Correction Coefficient: 1 | *ENG | [0 to 2.55 / **1** / 0.01 /step] |
| 002 | Correction Coefficient: 2 | *ENG | [0 to 2.55 / **0.5** / 0.01 /step] |
| 003 | Correction Coefficient: 3 | *ENG | [0 to 2.55 / **0** / 0.01 /step] |
| 004 | Correction Coefficient: 4 | *ENG | [0 to 2.55 / **0.25** / 0.01 /step] |
| 005 | Correction Coefficient: 5 | *ENG | [0 to 2.55 / **0.5** / 0.01 /step] |

| **3234** | **[Pixel Proportion Coefficient 3: Setting] DFU** | | |
|---|---|---|---|
| 001 | Correction Value 1 | *ENG | [-0.1 to 0 / -**0.01** / 0.01 /step] |
| 002 | Correction Value 2 | *ENG | [0 to 0.1 / **0.01** / 0.01 /step] |

| **3235** | **[Toner Supply Coefficient: Display] DFU** | | |
|---|---|---|---|
| 001 | Pixel Proportion 2: Bk | *ENG | [0 to 2.55 / **1** / 0.01 /step] |
| 002 | Pixel Proportion 2: M | *ENG | |
| 003 | Pixel Proportion 2: C | *ENG | |
| 004 | Pixel Proportion 2: Y | *ENG | |
| 005 | Pixel Proportion 3: Bk | *ENG | [0.7 to 1.3 / **1** / 0.01 /step] |
| 006 | Pixel Proportion 3: M | *ENG | |
| 007 | Pixel Proportion 3: C | *ENG | |
| 008 | Pixel Proportion 3: Y | *ENG | |
| 009 | Vt Integral Value: Bk | *ENG | [-255 to 255 / **0** / 0.01 /step] |
| 010 | Vt Integral Value: M | *ENG | |
| 011 | Vt Integral Value: C | *ENG | |
| 012 | Vt Integral Value: Y | *ENG | |

| **3236** | **[Toner Supply Consumption: Display] DFU** | | |
|---|---|---|---|
| | Displays the toner amount of the latest toner supply for each color. | | |
| 001 | Latest: Bk | *ENG | [0 to 40000 / **0** / 0.1 mg/step] |
| 002 | Latest: M | *ENG | |
| 003 | Latest: C | *ENG | |
| 004 | Latest: Y | *ENG | |

| | | | |
|---|---|---|---|
| **3237** | **[Developer Mixing Setting]** | | |
| | Displays the toner amount of the latest toner supply for each color. **DFU** | | |
| 001 | Mixing Time | *ENG | [0 to 200 / **5** / 1 sec/step] |

| | | | |
|---|---|---|---|
| **3238** | **[Vt Target: Setting]** | | |
| | Displays the Vt target value at developer initialization. **DFU** | | |
| 001 | Bk | *ENG | [0 to 5 / **2.5** / 0.01 V/step] |
| 002 | M | *ENG | |
| 003 | C | *ENG | |
| 004 | Y | *ENG | |

| | | | |
|---|---|---|---|
| **3239** | **[Vtref Correction: Setting]** | | |
| | Adjusts the parameter for Vtref correction at the process control. | | |
| 001 | (+)Consumption: Bk | *ENG | [0 to 1 / **0.1** / 0.01 V/step] |
| 002 | (+)Consumption: M | *ENG | |
| 003 | (+)Consumption: C | *ENG | |
| 004 | (+)Consumption: Y | *ENG | |
| 005 | (-)Consumption: Bk | *ENG | |
| 006 | (-)Consumption: M | *ENG | |
| 007 | (-)Consumption: C | *ENG | |
| 008 | (-)Consumption: Y | *ENG | |

| | | | |
|---|---|---|---|
| 009-012 | Threshold for development gamma rank. | | |
| 009 | P Rank 1 Threshold | *ENG | [0 to 2 / **0.2** / 0.1 /step] |
| 010 | P Rank 2 Threshold | *ENG | [0 to 2 / **0.1** / 0.1 /step] |
| 011 | P Rank 3 Threshold | *ENG | [-2 to 0 / **-0.1** / 0.1 /step] |
| 012 | P Rank 4 Threshold | *ENG | [-2 to 0 / **-0.2** / 0.1 /step] |
| 013-014 | Threshold for image density rank on the image transfer belt. | | |
| 013 | T Rank 1 Threshold | *ENG | [-1 to 0 / **-0.2** / 0.01 V/step] |
| 014 | T Rank 2 Threshold | *ENG | [0 to 1 / **0.2** / 0.01 V/step] |

| **3241** | **[Background Potential Setting]** | | |
|---|---|---|---|
| 001 | Coefficient: Bk | *ENG | These are parameters for calculating the charge bias referring to the development bias at process control.<br>[-1000 to 1000 / **0** / 1 /step]<br>DC charge bias = Development bias x (1 + 0.001 x these vales) + SP3-241-005 to -008 |
| 002 | Coefficient: M | *ENG | |
| 003 | Coefficient: C | *ENG | |
| 004 | Coefficient: Y | *ENG | |
| 005 | Offset: Bk | *ENG | These are additional values for calculating the charge bias referring to the development bias at process control.<br>[0 to 255 / **140** / 1 V/step]<br>DC charge bias = Development bias x (1 + 0.001 x SP3-241-001 to -004) + these values |
| 006 | Offset: M | *ENG | |
| 007 | Offset: C | *ENG | |
| 008 | Offset: Y | *ENG | |

| | | | |
|---|---|---|---|
| **3242** | **[LD Power Setting]** | | |
| | Adjusts the coefficient for LD power control value at the process control. | | |
| 001 | Coefficient: Bk | *ENG | [-1000 to 1000 / **61** / 1 /step] |
| 002 | Coefficient: M | *ENG | |
| 003 | Coefficient: C | *ENG | |
| 004 | Coefficient: Y | *ENG | |
| 005 | Offset: Bk | *ENG | [-1000 to 1000 / **79** / 1 /step] |
| 006 | Offset: M | *ENG | |
| 007 | Offset: C | *ENG | |
| 008 | Offset: Y | *ENG | |

| | | | |
|---|---|---|---|
| **3251** | **[Coverage]** | | |
| | These (-001 to -016) are coefficients for SP3-222-009 to -012. | | |
| 001 | Latest: Bk | *ENG | Displays the latest coverage for each color.<br>[0 to 9999 / **0** / 1 $cm^2$/step] |
| 002 | Latest: M | *ENG | |
| 003 | Latest: C | *ENG | |
| 004 | Latest: Y | *ENG | |

| | | | |
|---|---|---|---|
| 005-008 | Displays the average coverage of each color for the Vtref correction.<br>"Average S" is defined when the number of developed pages does not reach the number specified with SP3251-017. | | |
| 005 | Average S: Bk | *ENG | [0 to 100 / **5** / 0.01 %/step] |
| 006 | Average S: M | *ENG | |
| 007 | Average S: C | *ENG | |
| 008 | Average S: Y | *ENG | |
| 009-012 | Displays the average coverage of each color for the Vtref correction.<br>"Average M" is defined when the number of developed pages does not reach the number specified with SP3251-018. | | |
| 009 | Average M: Bk | *ENG | [0 to 100 / **5** / 0.01 %/step] |
| 010 | Average M: M | *ENG | |
| 011 | Average M: C | *ENG | |
| 012 | Average M: Y | *ENG | |
| 013-016 | Displays the average coverage of each color for the Vtref correction.<br>"Average L" is defined when the number of developed pages does not reach the number specified with SP3-251-019. | | |
| 013 | Average L: Bk | *ENG | [0 to 100 / **5** / 0.01 %/step] |
| 014 | Average L: M | *ENG | |
| 015 | Average L: C | *ENG | |
| 016 | Average L: Y | *ENG | |

| | | | |
|---|---|---|---|
| 017-019 | Adjusts the threshold for SP3-251-005 to -016. | | |
| 017 | Total Page Setting: S | *ENG | [1 to 100 / **10** / 1 sheet/step] |
| 018 | Total Page Setting: M | *ENG | [1 to 500 / **10** / 1 sheet/step] |
| 019 | Total Page Setting: L | *ENG | [1 to 999 / **50** / 1 sheet/step] |
| 020-023 | Adjusts the threshold for SP3-251-024 to -027. | | |
| 020 | Total Page Setting: S2 | *ENG | [1 to 100 / **20** / 1 sheet/step] |
| 021 | Total Page Setting: M2 | *ENG | [1 to 500 / **10** / 1 sheet/step] |
| 022 | Total Page Setting: L2 | *ENG | [1 to 999 / **50** / 1 sheet/step] |
| 024-027 | Displays the latest coverage ratio for each color. | | |
| 024 | Latest Coverage: Bk | *ENG | [0 to 100 / - / 0.01 %/step] |
| 025 | Latest Coverage: M | *ENG | |
| 026 | Latest Coverage: C | *ENG | |
| 027 | Latest Coverage: Y | *ENG | |
| 028 | Displays the threshold of whether to perform developer churning or not. | | |
| | DevMix Threshold | *ENG | [0 to 100 / **20** / 1 %/step] |

| | | | |
|---|---|---|---|
| **3311** | **[ID Sensor Detection Value: Vofset]** | | |
| | Displays the ID sensor (regular) offset voltage for Vsg adjustments. | | |
| 001 | Voffset reg: Bk | *ENG | [0 to 5 / **0** / 0.01 V/step] |
| 002 | Voffset reg: M | *ENG | [0 to 5.5 / **0** / 0.01 V/step] |
| 003 | Voffset reg: C | *ENG | |
| 004 | Voffset reg: Y | *ENG | |
| 005-007 | Displays the ID sensor (diffusion) offset voltage for Vsg adjustments. | | |
| 005 | Voffset dif: M | *ENG | [0 to 5.5 / **0** / 0.01 V/step] |
| 006 | Voffset dif: C | *ENG | |
| 007 | Voffset dif: Y | *ENG | |
| 008-010 | Displays the ID sensor offset voltage for Vsg adjustments. | | |
| 008 | Voffset TM (Front) | *ENG | [0 to 5.5 / **0** / 0.01 V/step] |
| 009 | Voffset TM (Center) | *ENG | |
| 010 | Voffset TM (Rear) | *ENG | |

| | | | |
|---|---|---|---|
| **3321** | **[Vsg Adjustment: Execution]** | | |
| 010 | P/TM Sensor All | - | Execute the ID sensor initialization setting for all sensors |

| 3322 | [Vsg Adjustment Result: Vsg] | | |
|---|---|---|---|
| | Displays the result value of the Vsg adjustment for each sensor. | | |
| 001 | Vsg reg: Bk | *ENG | [0 to 5.5 / **0** / 0.01 V/step] |
| 002 | Vsg reg: M | *ENG | |
| 003 | Vsg reg: C | *ENG | |
| 004 | Vsg reg: Y | *ENG | |
| 005 | Vsg dif: M | *ENG | |
| 006 | Vsg dif: C | *ENG | |
| 007 | Vsg dif: Y | *ENG | |
| 008 | Vsg TM (Front) | *ENG | |
| 009 | Vsg TM (Center) | *ENG | |
| 010 | Vsg TM (Rear) | *ENG | |

| 3323 | [Vsg Adjustment Result: Ifsg] DFU | | |
|---|---|---|---|
| 001 | Ifsg: Bk | *ENG | [0 to 50 / **0** / 0.1 mA/step] |
| 002 | Ifsg: M | *ENG | |
| 003 | Ifsg: C | *ENG | |
| 004 | Ifsg: Y | *ENG | |
| 005 | Ifsg TM (Front) | *ENG | [0 to 50 / **0** / 0.1 mA/step] |
| 006 | Ifsg TM (Center) | *ENG | |
| 007 | Ifsg TM (Rear) | *ENG | |

| **3324** | **[Vsg Adjustment: Set] DFU** | | |
|---|---|---|---|
| 001 | SC Detection | *ENG | [0 to 1 / **1** / 1p] |
| 003 | Vofset Error Counter | *ENG | [0 to 99 / **0** / 0.1 time/step] |
| 004 | Vofset Threshold | *ENG | [0 to 5 / **1** / 0.01 V/step] |
| 005 | Vsg Upper Threshold | *ENG | [0 to 5 / **4.5** / 0.01 V/step] |
| 006 | Vsg Lower Threshold | *ENG | [0 to 5 / **3.5** / 0.01 V/step] |

| **3325** | **[Vsg Adjustment Result]** | | |
|---|---|---|---|
| | Displays the result of the Vsg adjustment.<br>The displayed numbers mean the result of each sensor (sensor for Front, sensor for Bk, sensor for Cyan, sensor for Center, sensor for Magenta, sensor for Yellow and sensor for Rear). | | |
| 001 | Latest | *ENG | [111111 to 999999 / **999999** / 1 /step]<br>9: Unexpected error<br>3: Offset voltage error<br>2: Vsg adjustment value error<br>1: O.K |
| 002 | Latest 1 | *ENG | |
| 003 | Latest 2 | *ENG | |
| 004 | Latest 3 | *ENG | |
| 005 | Latest 4 | *ENG | |
| 006 | Latest 5 | *ENG | |
| 007 | Latest 6 | *ENG | |
| 008 | Latest 7 | *ENG | |
| 009 | Latest 8 | *ENG | |
| 010 | Latest 9 | *ENG | |

| **3361** | **[ID Sensor Sensitivity: Display] Not Used** | | |
|---|---|---|---|
| 001 | K2K (Latest) | *ENG | [0 to 5 / - / 0.0001 /step] |
| 002 | K5K (Latest) | *ENG | |
| 003 | K2M (Latest) | *ENG | |
| 004 | K5M (Latest) | *ENG | |
| 005 | K2C (Latest) | *ENG | |
| 006 | K5C (Latest) | *ENG | |
| 007 | K2Y (Latest) | *ENG | |
| 008 | K5Y (Latest) | *ENG | |

| **3362** | **[ID Sensor Sensitivity: Setting] DFU** | | |
|---|---|---|---|
| 001 | K2: Upper | *ENG | [0 to 1 / **0.32** / 0.01 /step] |
| 002 | K2: Lower | *ENG | [0 to 1 / **0.22** / 0.01 /step] |
| 003 | K5: Upper | *ENG | [0 to 10 / **5** / 0.01 /step] |
| 004 | K5: Lower | *ENG | [0 to 1 / **0.5** / 0.01 /step] |
| 005 | Kn: Lower | *ENG | [0 to 1 / **0.1** / 0.01 /step] |
| 006 | Kn: Upper | *ENG | [0 to 1 / **1** / 0.01 /step] |
| 007 | K5 Edit Point | *ENG | [0 to 1 / **0.15** / 0.01 /step] |
| 008 | K5 Target Voltage | *ENG | [0 to 5 / **1.63** / 0.01 V/step] |
| 009 | K5 Approximate Method | *ENG | [0 to 1 / **1** / 1 /step]<br>0:Linear, 1: Curve |
| 010 | K2: Upper/Lower Limit Coefficient 1 | *ENG | [0 to 1 / **0** / 0.01 /step] |

| | | | |
|---|---|---|---|
| 011 | K2: Upper Limit Correction | *ENG | [–0.2 to 0.4 / **0.07** / 0.01 /step] |
| 012 | K2: Lower Limit Correction | *ENG | [–0.2 to 0.4 / **–0.07** / 0.01 /step] |
| 013 | Diffusion Correction: M | *ENG | [0.75 to 1.35 / **1** / 0.01 /step] |
| 014 | Diffusion Correction: C | *ENG | |
| 015 | Diffusion Correction: Y | *ENG | |
| 016 | K2: Check: M | *ENG | [0 to 1 / **0.25** / 0.001 /step] |
| 017 | K2: Check: C | *ENG | |
| 018 | K2: Check: Y | *ENG | |

| **3363** | **[ID Pattern Timing Setting] DFU** | | |
|---|---|---|---|
| 001 | Scan YCMBk | *ENG | Adjusts the detection timing for the process control pattern.<br>[-500 to 500 / **13.7** / 1 mm/step] |
| 002 | Paper Transfer Release Start Time | *ENG | Adjusts the timing when the paper transfer unit is kept away from the image transfer belt.<br>[0 to 2500 / **0** / 1 msec/step] |
| 003 | Delay Time | *ENG | Adjusts the processing timing for the process control pattern.<br>[0 to 2500 / **880** / 1 msec/step] |
| 004 | MUSIC Delay Time | *ENG | Adjusts the processing timing for the pattern that is used for the line position adjustment.<br>[-2500 to 2500 / **300** / 1 msec/step] |

| 3371 | [M/A Calculation] DFU | | |
|---|---|---|---|
| 001 | Correction Coefficient: Bk | *ENG | [0.5 to 2.0 / **1** / 0.01 /step] |
| 002 | Correction Coefficient: M | *ENG | [0.5 to 2.0 / **0.95** / 0.01 /step] |
| 003 | Correction Coefficient: C | *ENG | [0.5 to 2.0 / **1** / 0.01 /step] |
| 004 | Correction Coefficient: Y | *ENG | [0.5 to 2.0 / **1.02** / 0.01 /step] |

| 3401 | [Fixed Supply Mode] | | |
|---|---|---|---|
| | Adjusts the toner supply rate in the fixed toner supply mode. | | |
| 001 | Fixed Rate: Bk | *ENG | [0 to 100 / **5** / 1 %/step]<br>These SPs are used only when SP3-044 is set to "1". |
| 002 | Fixed Rate: M | *ENG | |
| 003 | Fixed Rate: C | *ENG | |
| 004 | Fixed Rate: Y | *ENG | |

| 3411 | [Toner Supply Rate: Display] | | |
|---|---|---|---|
| | Displays the current toner supply rate. | | |
| 001 | Latest: Bk | *ENG | [0 to 100 / **-** / 1 %/step] |
| 002 | Latest: M | *ENG | |
| 003 | Latest: C | *ENG | |
| 004 | Latest: Y | *ENG | |

| **3421** | **[Toner Supply Range]** | | |
|---|---|---|---|
| 001 | Upper Limit: Bk | *ENG | Adjusts the toner supply rate during printing.<br>[0 to 100 / **100** / 1%/step] |
| 002 | Upper Limit: M | *ENG | |
| 003 | Upper Limit: C | *ENG | |
| 004 | Upper Limit: Y | *ENG | |
| 005 | Minimum Supply Time: Bk | *ENG | Adjusts the minimum toner supply time.<br>[0 to 1000 / **0** / 1 msec/step] |
| 006 | Minimum Supply Time: M | *ENG | |
| 007 | Minimum Supply Time: C | *ENG | |
| 008 | Minimum Supply Time: Y | *ENG | |

| **3451** | **[Toner Supply Carry Over: Display] DFU** | | |
|---|---|---|---|
| 001 | Bk | *ENG | [0 to 10000 / **0** / 1 msec/step] |
| 002 | M | *ENG | |
| 003 | C | *ENG | |
| 004 | Y | *ENG | |

| **3452** | **[Toner Supply Carry Over: Setting] DFU** | | |
|---|---|---|---|
| 001 | Maximum: Bk | *ENG | [0 to 10000 / **1000** / 1 msec/step] |
| 002 | Maximum: M | *ENG | |
| 003 | Maximum: C | *ENG | |
| 004 | Maximum: Y | *ENG | |

| | | | |
|---|---|---|---|
| **3501** | **[Process Control Target M/A]** | | |
| | Adjusts the target M/A. | | |
| 001 | Maximum M/A: Bk | *ENG | [0 to 1 / **0.444** / 0.001 mg/cm$^2$/step] |
| 002 | Maximum M/A: M | *ENG | |
| 003 | Maximum M/A: C | *ENG | |
| 004 | Maximum M/A: Y | *ENG | |

| | | | |
|---|---|---|---|
| **3510** | **[Image Quality Adj. Counter: Display]** | | |
| | Displays the total page counter for each adjustment mode. | | |
| 001 | Potential Control: BW | *ENG | [0 to 2000 / **0** / 1 page/step] |
| 002 | Potential Control: FC | *ENG | |
| 003 | Power ON: BW | *ENG | |
| 004 | Power ON: FC | *ENG | |
| 005 | MUSIC: BW | *ENG | |
| 006 | MUSIC: FC | *ENG | |
| 007 | Vsg Adj. | *ENG | |
| 008 | Charge AC Control | *ENG | |
| 009 | MUSIC: Power ON: BW | *ENG | |
| 010 | MUSIC: Power ON: FC | *ENG | |

| | | | |
|---|---|---|---|
| **3511** | **[Execution Interval: Setting]** | | |
| | Adjusts the threshold for each adjustment mode. | | |
| 001 | Job End: Potential Control: BW | *ENG | [0 to 2000 / **250** / 1 page/step] |
| 002 | Job End: Potential Control: FC | *ENG | [0 to 2000 / **100** / 1 page/step] |
| 003 | Interrupt: Potential Control: BW | *ENG | [0 to 2000 / **500** / 1 page/step] |
| 004 | Interrupt: Potential Control: FC | *ENG | [0 to 2000 / **200** / 1 page/step] |
| 005 | Initial: Potential Control: BW | *ENG | [0 to 2000 / **250** / 1 page/step] |
| 006 | Initial: Potential Control: FC | *ENG | [0 to 2000 / **100** / 1 page/step] |
| 007 | Vsg Adj. Counter | *ENG | [0 to 2000 / **0** / 1 page/step] |
| 008 | Charge AC Control Counter | *ENG | |
| 009 | Interrupt: Vtref Correction: BW | *ENG | [0 to 2000 / **100** / 1 page/step] |
| 010 | Interrupt: Vtref Correction: FC | *ENG | |
| 011 | Initial: Vtref Correction: FC | *ENG | |
| 012 | Initial: Vtref Correction: BW | *ENG | |
| 013 | Job End: Vt Line Speed Correction: FC | *ENG | [0 to 2000 / **1000** / 1 page/step] |
| 014 | Job End: Vt Line Speed Correction: BW | *ENG | |
| 015 | Interrupt: Vt Line Speed Correction: BW | *ENG | [0 to 2000 / **0** / 1 page/step] |
| 016 | Interrupt: Vt Line Speed Correction: FC | *ENG | |

| | | | |
|---|---|---|---|
| 017 | Initial: Vt Line Speed Correction: BW | *ENG | [0 to 2000 / **1000** / 1 page/step] |
| 018 | Initial: Vt Line Speed Correction: FC | *ENG | |
| 019 | Environmental Correction | *ENG | [0 or 1 / **1** / 1 /step]<br>0: Not Correct (OFF), 1: Correct (ON) |
| 020 | Gamma Correction | *ENG | |
| 021 | Non-use Time Correction | *ENG | |
| 022 | Correction Coefficient 1: JE: BW | *ENG | [0 to 1 / **0.2** / 0.01 page/step] |
| 023 | Correction Coefficient 2: JE: BW | *ENG | [0 to 1 / **1** / 0.01/step] |
| 024 | Correction Coefficient 1: JE: FC | *ENG | [0 to 1 / **0.5** / 0.01/step] |
| 025 | Correction Coefficient 2: JE: FC | *ENG | [0 to 1 / **1** / 0.01/step] |
| 026 | Correction Coefficient 1: Interrupt: BW | *ENG | [0 to 1 / **0.1** / 0.01/step] |
| 027 | Correction Coefficient 2: Interrupt: BW | *ENG | [0 to 1 / **1** / 0.01/step] |
| 028 | Correction Coefficient 1: Interrupt: FC | *ENG | [0 to 1 / **0.25** / 0.01/step] |
| 029 | Correction Coefficient 2: Interrupt: FC | *ENG | [0 to 1 / **1** / 0.01/step] |
| 030 | Max. Number Correction Threshold | *ENG | [0 to 99 / **5** / 1/step] |
| 031 | Max. Number Correction Counter | *ENG | [0 to 255 / **0** / 1/step] |

| | | | |
|---|---|---|---|
| **3512** | **[Image Quality Adj.: Interval]** | | |
| | Adjusts the timing for execution of process control and line position adjustment. | | |
| 001 | During Job | *ENG | [0 to 100 / **30** / 1 page/step] |
| 002 | During Stand-by | *ENG | [0 to 100 / **10** / 1 minute/step] |

| | | | |
|---|---|---|---|
| **3513** | **[PCU Motor Stop Time: Bk]** | | |
| | Displays the last time that the PCU motors stopped.<br>These are used for process control execution timing. | | |
| 001 | Year | *ENG | [0 to 99 / **0** / 1/step] |
| 002 | Month | *ENG | [1 to 12 / **1** / 1/step] |
| 003 | Date | *ENG | [1 to 31 / **1** / 1/step] |
| 004 | Hour | *ENG | [0 to 23 / **0** / 1/step] |
| 005 | Minute | *ENG | [0 to 59 / **0** / 1/step] |

| | | | |
|---|---|---|---|
| **3514** | **[Environmental Display: Job End]** | | |
| | Displays the environmental conditions for the last job.<br>These are used for process control execution timing. | | |
| 001 | Temperature | *ENG | [-1280 to 1270 / **0** / 0.1°C/step] |
| 002 | Relative Humidity | *ENG | [0 to 1000 / **-** / 0.1%RH/step] |
| 003 | Absolute Humidity | *ENG | [0 to 1000 / **-** / 0.1 g/cm$^3$/step] |

| | | | |
|---|---|---|---|
| **3515** | **[Execution Interval: Display]** | | |
| | Displays the current interval for process control execution.<br>When the machine calculates the timing for process control, it uses a number of conditions. These are the results after considering all the conditions. | | |
| 001 | Job End: Potential Control: BW | *ENG | [0 to 2000 / **500** / 1 page/step] |
| 002 | Job End: Potential Control: FC | *ENG | [0 to 2000 / **200** / 1 page/step] |
| 003 | Interrupt: Potential Control: BW | *ENG | [0 to 2000 / **500** / 1 page/step] |
| 004 | Interrupt: Potential Control: FC | *ENG | [0 to 2000 / **200** / 1 page/step] |

| | | | |
|---|---|---|---|
| **3516** | **[Refresh Mode] DFU** | | |
| | While making prints with low coverage, the developer is agitated with less toner consumption and the toner carrier attraction tends to increase. This may cause low image density or poor transfer (white dots). To prevent this, the coagulated toner or overcharged toner has to be consumed by performing the refresh mode. | | |
| 001 | Dev. Motor Rotation: Display: Bk | *ENG | [0 to 1000 / **0** / 0.1 m/step] |
| 002 | Dev. Motor Rotation: Display: M | *ENG | |
| 003 | Dev. Motor Rotation: Display: C | *ENG | |
| 004 | Dev. Motor Rotation: Display: Y | *ENG | |
| 005 | Rotation Threshold | *ENG | [0 to 1000 / **1** / 1 m/step] |

| | | | |
|---|---|---|---|
| 006 | Pixel Coverage Sum: Bk | *ENG | [0 to 65535 / **0** / 1 $cm^2$/step] |
| 007 | Pixel Coverage Sum: M | *ENG | |
| 008 | Pixel Coverage Sum: C | *ENG | |
| 009 | Pixel Coverage Sum: Y | *ENG | |
| 010 | Required Area: Bk | *ENG | |
| 011 | Required Area: M | *ENG | |
| 012 | Required Area: C | *ENG | |
| 013 | Required Area: Y | *ENG | |
| 014 | Refresh Threshold: Bk | *ENG | [0 to 255 / **14** / 1 $cm^2$/m/step] |
| 015 | Refresh Threshold: M | *ENG | |
| 016 | Refresh Threshold: C | *ENG | |
| 017 | Refresh Threshold: Y | *ENG | |
| 018 | Pattern Generation Number: Bk | *ENG | [0 to 255 / **0** / 1 time/step] |
| 019 | Pattern Generation Number: M | *ENG | |
| 020 | Pattern Generation Number: C | *ENG | |
| 021 | Pattern Generation Number: Y | *ENG | |
| 022 | Pattern Generation Number: Upper limit | *ENG | |
| 023 | Toner Consumption Pattern Area | *ENG | [10 to 2550 / **300** / 10 $cm^2$/step] |
| 024 | Supply Coefficient | *ENG | [0 to 2.55 / **1** / 0.01/step] |
| 025 | Job End Area Coefficient | *ENG | [0.1 to 25.5 / **1** / 0.1/step] |

| | | | |
|---|---|---|---|
| 026 | Job End Vb Coefficient | *ENG | [0 to 100 / **40** / 1%/step] |
| 027 | Job End Length | *ENG | [0 to 56 / **12** / 1mm/step] |
| 028 | Job End Supply | *ENG | [0 to 1 / 0.45 / 0.001 mg/cm$^2$/step] |

| | | | |
|---|---|---|---|
| **3517** | **[Blade damage prevention mode]** | | |
| | Adjusts the threshold temperature for preventing the cleaning blade at the drum unit from being damaged. If the temperature is above this value, the drum reverses briefly at the end of the job to prevent the blade from flipping over. | | |
| 001 | Execution Temp. Threshold | *ENG | [0 to 50/ **40** / 1°C/step] |

| **3518** | **[Image Quality Adj. Execution Flag] DFU** | | |
|---|---|---|---|
| 001 | Toner End Recovery: Bk | *ENG | [0 or 1 / **0** / 1/step]<br>0: OFF. 1: ON |
| 002 | Toner End Recovery: M | *ENG | |
| 003 | Toner End Recovery: C | *ENG | |
| 004 | Toner End Recovery: Y | *ENG | |
| 005 | Vsg Adj. | *ENG | |
| 006 | Developer Mixing | *ENG | |
| 007 | Process Control | *ENG | [0 to 2 / **0** / 1/step]<br>0: OFF. 1: ON (once), 2: ON (twice) |
| 008 | MUSIC | *ENG | [0 to 2 / **0** / 1/step]<br>0: OFF. 1: ON (once), 2: ON (twice) |
| 009 | Drum Phase Adj. | *ENG | [0 or 1 / **0** / 1/step]<br>0: OFF. 1: ON |
| 010 | Charge AC Control | *ENG | |
| 011 | Blade Damage Prevention | *ENG | |

| **3519** | **[Toner End Prohibition Setting]** | | |
|---|---|---|---|
| | Enables or disables each adjustment at toner near end. | | |
| 001 | Process Control | *ENG | [0 or 1 / **1** / 1/step]<br>0: Permit (adjustment is done even toner near end condition)<br>1: Forbid (adjustment is not done at toner near end condition) |
| 002 | MUSIC | *ENG | |
| 003 | TC Adj. | *ENG | |

| **3520** | **[ITB Idling Number]** | | |
|---|---|---|---|
| 001 | Temperature: H | *ENG | [0 or 3 / **0** / 1 revolution/step] |
| 002 | Temperature: M | *ENG | |
| 003 | Temperature: L | *ENG | |
| 004 | Temperature: L: Power ON | *ENG | |

| **3521** | **[Temperature Threshold]** | | |
|---|---|---|---|
| 001 | Threshold: t2 | *ENG | [20 or 30 / **25** / 1 deg/step] |
| 002 | Threshold: t1 | *ENG | [0 or 15 / **15** / 1 deg/step] |

| **3522** | **[Initial Process Control Setting]** | | |
|---|---|---|---|
| | Adjusts the threshold for the process control at power on.<br>When the current condition has changed by more than the values of these SPs when compared with the conditions at the previous operation, the process control at power on is executed. | | |
| 002 | Non-use Time Setting | *ENG | [0 to 1440 / **360** / 1 minute/step] |
| 003 | Temperature Range | *ENG | [0 to 99 / **10** / 1°C/step] |
| 004 | Relative Humidity Range | *ENG | [0 to 99 / **50** / 1 %RH/step] |
| 005 | Absolute Humidity Range | *ENG | [0 to 99 / **6** / 1 g/m$^3$/step] |
| 100 | [Rapi_timer] | | |
| | [Time Setting] | *ENG | [0 to 255 / **30** / 1 sec/step] |

| | | | |
|---|---|---|---|
| **3531** | **[Non-use Time Process Control Setting]** | | |
| | Adjusts the threshold for the process control at stand-by.<br>When the current condition has changed by more than the values of these SPs when compared with the conditions at the previous operation, the process control at stand-by is executed. | | |
| 001 | Non-use Time Setting | *ENG | [0 to 1440 / **360** / 1 minute/step] |
| 002 | Temperature Range | *ENG | [0 to 99 / **10** / 1°C/step] |
| 003 | Relative Humidity Range | *ENG | [0 to 99 / **50** / 1 %RH/step] |
| 004 | Absolute Humidity Range | *ENG | [0 to 99 / **6** / 1 g/m$^3$/step] |
| 005 | Maximum Execution Number | *ENG | Adjusts the maximum execution time for the process control at stand-by.<br>[0 to 99 / **10** / 1 time/step] |

| | | | |
|---|---|---|---|
| **3611** | **[Development Gamma: Display/Set]** | | |
| 001 | Bk (Current) | *ENG | Displays the current development gamma for each color.<br>[0 to 5 / - / 0.01 mg/cm$^2$/kV /step] |
| 002 | M (Current) | *ENG | |
| 003 | C (Current) | *ENG | |
| 004 | Y (Current) | *ENG | |
| 005 | Bk (Target Display) | *ENG | Displays the target development gamma for each color.<br>[0 to 5 / **0.85** / 0.01 mg/cm$^2$/kV /step] |
| 006 | M (Target Display) | *ENG | |
| 007 | C (Target Display) | *ENG | [0 to 5 / **0.8** / 0.01 mg/cm$^2$/kV /step] |
| 008 | Y (Target Display) | *ENG | [0 to 5 / **0.77** / 0.01 mg/cm$^2$/kV /step] |

| | | | |
|---|---|---|---|
| 009 | Bk (Standard Target Set) | *ENG | Displays the standard target development gamma for each color.<br>[0 to 5 / **0.9** / 0.01 mg/cm$^2$/kV /step] |
| 010 | M (Standard Target Set) | *ENG | [0 to 5 / **0.8** / 0.01 mg/cm$^2$/kV /step] |
| 011 | C (Standard Target Set) | *ENG | |
| 012 | Y (Standard Target Set) | *ENG | |
| 013 | Environmental Correction | *ENG | Turns on or off the environmental correction for target development gamma.<br>[0 or 1 / **1** / - ]<br>0: Not Correct, 1: Correct |
| 014 | K (Max Correction) | *ENG | [0 to 5 / **0.1** / 0.01 mg/cm2/kv/step] |
| 015 | M (Max Correction) | *ENG | |
| 016 | C (Max Correction) | *ENG | |
| 017 | Y (Max Correction) | *ENG | |
| 018 | K (Max Abs Hum) | *ENG | [1 to 99 / **15** / 1 g/m3/step] |
| 019 | M (Max Abs Hum) | *ENG | |
| 020 | C (Max Abs Hum) | *ENG | |
| 021 | Y (Max Abs Hum) | *ENG | |

| | | | |
|---|---|---|---|
| **3612** | **[Vk Display]** | | |
| | Displays Vk for each color. | | |
| 001 | Bk | *ENG | [-300 to 300 / - / 1 V/step] |
| 002 | M | *ENG | |
| 003 | C | *ENG | |
| 004 | Y | *ENG | |

| | | | |
|---|---|---|---|
| **3621** | **[Development DC Control: Display]**<br>Plain: 154 mm/sec, Thick 1 and Thick 2&Fine: 77 mm/sec | | |
| | Displays the development DC bias adjusted with the process control for each line speed and color. | | |
| 001 | Plain: Bk | *ENG | [0 to 700 / **550** / 1 -V/step] |
| 002 | Plain: M | *ENG | |
| 003 | Plain: C | *ENG | |
| 004 | Plain: Y | *ENG | |
| 009 | Thick 2 & FINE: Bk | *ENG | |
| 010 | Thick 2 & FINE: M | *ENG | |
| 011 | Thick 2 & FINE: C | *ENG | |
| 012 | Thick 2 & FINE: Y | *ENG | |

| | | | |
|---|---|---|---|
| **3631** | **[Charge DC Control: Display]**<br>Plain: 154 mm/sec, Thick 1 and Thick 2&Fine: 77 mm/sec | | |
| | Displays the charge DC voltage adjusted with the process control for each line speed and color. | | |
| 001 | Plain: Bk | *ENG | [0 to 2000 / **690** / 1 -V/step] |
| 002 | Plain: M | *ENG | |
| 003 | Plain: C | *ENG | |
| 004 | Plain: Y | *ENG | |
| 009 | Thick 2 & FINE: Bk | *ENG | |
| 010 | Thick 2 & FINE: M | *ENG | |
| 011 | Thick 2 & FINE: C | *ENG | |
| 012 | Thick 2 & FINE: Y | *ENG | |

| | | | |
|---|---|---|---|
| **3641** | **[Charge AC Control: Display]**<br>Plain: 154 mm/sec | | |
| | Displays the charge AC voltage adjusted with the process control for each color. | | |
| 001 | Plain: Bk | *ENG | [0 to 3 / **1.75** / 0.01 kV/step] |
| 002 | Plain: M | *ENG | |
| 003 | Plain: C | *ENG | |
| 004 | Plain: Y | *ENG | |

| | | | |
|---|---|---|---|
| **3651** | **[LD Power Control: Display]**<br>Plain: 154 mm/sec, Thick 2 & FINE: 77 mm/sec | | |
| | Displays the LD power adjusted for each environment. | | |
| 001 | Plain: Bk | *ENG | [0 to 200 / **100** / 1 %/step] |
| 002 | Plain: M | *ENG | |
| 003 | Plain: C | *ENG | |
| 004 | Plain: Y | *ENG | |
| 005 | Thick 1: Bk | *ENG | |
| 006 | Thick 1: M | *ENG | |
| 007 | Thick 1: C | *ENG | |
| 008 | Thick 1: Y | *ENG | |
| 009 | Thick 2 & FINE: Bk | *ENG | |
| 010 | Thick 2 & FINE: M | *ENG | |
| 011 | Thick 2 & FINE: C | *ENG | |
| 012 | Thick 2 & FINE: Y | *ENG | |

| | | | |
|---|---|---|---|
| **3710** | **[HST Concentration Control: Set]**<br>TD Sensor: Toner Concentration Control Setting | | |
| | Selects the toner concentration control method by HST memory, which is in the TD sensor. | | |
| 001 | Control Method: Selection | *ENG | [0 or 1 / **1** / - ]<br>0: Not Use, 1: Use |

| | | | |
|---|---|---|---|
| **3711** | **[HST Concentration Control: Bk]** | | |
| | Displays the factory settings of the black PCU. | | |
| 001 | Vcnt | *ENG | [0 to 5 / **4** / 0.1 V/step] |
| 002 | Vt | *ENG | [0 to 5 / **2.5** / 0.1 V/step] |
| 003 | Sensitivity: HL | *ENG | [1.22 to 3.77 / **2.1** / 0.01 V/step] |
| 004 | Sensitivity: HM | *ENG | [0 to 2.55 / **1.05** / 0.01 V/step] |
| 005 | Sensitivity: ML | *ENG | |
| 006 | Set Detection | *ENG | [0 to 5 / **1** / 0.1 V/step] |
| 007 | Without Developer | *ENG | [0 to 5 / **1.2** / 0.1 V/step] |
| 008 | With Developer | *ENG | [0 to 5 / **1.3** / 0.1 V/step] |
| 009 | Serial Number 1 | *ENG | [0 to 255 / **-** / 1 V/step] |
| 010 | Serial Number 2 | *ENG | |
| 011 | Adjustment: Vt | *ENG | [0 to 5 / **3** / 0.1 V/step] |
| 012 | Adjustment: Vtref | *ENG | [0 to 5 / **3** / 0.1 V/step] |
| 013 | Adjustment: Vtcnt | *ENG | [0 to 5 / **4** / 0.01 V/step] |
| 014 | Adjustment: Gamma | *ENG | [0 to 2.55 / **0** / 0.01 mg/cm$^2$/kV /step] |
| 015 | Adjustment: Vcnt Result | *ENG | [0 to 9 / **9** / 1 /step] |

| | | | |
|---|---|---|---|
| **3712** | **[HST Concentration Control: M]** | | |
| | Displays the factory settings of the magenta PCU. | | |
| 001 | Vcnt | *ENG | [0 to 5 / **4** / 0.1 V/step] |
| 002 | Vt | *ENG | [0 to 5 / **2.5** / 0.1 V/step] |
| 003 | Sensitivity: HL | *ENG | [1.22 to 3.77 / **2.1** / 0.01 V/step] |
| 004 | Sensitivity: HM | *ENG | [0 to 2.55 / **1.05** / 0.01 V/step] |
| 005 | Sensitivity: ML | *ENG | |
| 006 | Set Detection | *ENG | [0 to 5 / **1** / 0.1 V/step] |
| 007 | Without Developer | *ENG | [0 to 5 / **1.2** / 0.1 V/step] |
| 008 | With Developer | *ENG | [0 to 5 / **1.3** / 0.1 V/step] |
| 009 | Serial Number 1 | *ENG | [0 to 255 / **-** / 1 V/step] |
| 010 | Serial Number 2 | *ENG | |
| 011 | Adjustment: Vt | *ENG | [0 to 5 / **3** / 0.1 V/step] |
| 012 | Adjustment: Vtref | *ENG | [0 to 5 / **3** / 0.1 V/step] |
| 013 | Adjustment: Vtcnt | *ENG | [0 to 5 / **4** / 0.01 V/step] |
| 014 | Adjustment: Gamma | *ENG | [0 to 2.55 / **0** / 0.01 mg/cm$^2$/kV /step] |
| 015 | Adjustment: Vcnt Result | *ENG | [0 to 9 / **9** / 1 /step] |

| | | | |
|---|---|---|---|
| **3713** | **[HST Concentration Control: C]** | | |
| | Displays the factory settings of the cyan PCU. | | |
| 001 | Vcnt | *ENG | [0 to 5 / **4** / 0.1 V/step] |
| 002 | Vt | *ENG | [0 to 5 / **2.5** / 0.1 V/step] |
| 003 | Sensitivity: HL | *ENG | [1.22 to 3.77 / **2.1** / 0.01 V/step] |
| 004 | Sensitivity: HM | *ENG | [0 to 2.55 / **1.05** / 0.01 V/step] |
| 005 | Sensitivity: ML | *ENG | |
| 006 | Set Detection | *ENG | [0 to 5 / **1** / 0.1 V/step] |
| 007 | Without Developer | *ENG | [0 to 5 / **1.2** / 0.1 V/step] |
| 008 | With Developer | *ENG | [0 to 5 / **1.3** / 0.1 V/step] |
| 009 | Serial Number 1 | *ENG | [0 to 255 / **-** / 1 V/step] |
| 010 | Serial Number 2 | *ENG | |
| 011 | Adjustment: Vt | *ENG | [0 to 5 / **3** / 0.1 V/step] |
| 012 | Adjustment: Vtref | *ENG | [0 to 5 / **3** / 0.1 V/step] |
| 013 | Adjustment: Vtcnt | *ENG | [0 to 5 / **4** / 0.01 V/step] |
| 014 | Adjustment: Gamma | *ENG | [0 to 2.55 / **0** / 0.01 mg/cm$^2$/kV /step] |
| 015 | Adjustment: Vcnt Result | *ENG | [0 to 9 / **9** / 1 /step] |

| | | | |
|---|---|---|---|
| **3714** | **[HST Concentration Control: Y]** | | |
| | Displays the factory settings of the yellow PCU. | | |
| 001 | Vcnt | *ENG | [0 to 5 / **4** / 0.1 V/step] |
| 002 | Vt | *ENG | [0 to 5 / **2.5** / 0.1 V/step] |
| 003 | Sensitivity: HL | *ENG | [1.22 to 3.77 / **2.1** / 0.01 V/step] |
| 004 | Sensitivity: HM | *ENG | [0 to 2.55 / **1.05** / 0.01 V/step] |
| 005 | Sensitivity: ML | *ENG | |
| 006 | Set Detection | *ENG | [0 to 5 / **1** / 0.1 V/step] |
| 007 | Without Developer | *ENG | [0 to 5 / **1.2** / 0.1 V/step] |
| 008 | With Developer | *ENG | [0 to 5 / **1.3** / 0.1 V/step] |
| 009 | Serial Number 1 | *ENG | [0 to 255 / **-** / 1 V/step] |
| 010 | Serial Number 2 | *ENG | |
| 011 | Adjustment: Vt | *ENG | [0 to 5 / **3** / 0.1 V/step] |
| 012 | Adjustment: Vtref | *ENG | [0 to 5 / **3** / 0.1 V/step] |
| 013 | Adjustment: Vtcnt | *ENG | [0 to 5 / **4** / 0.01 V/step] |
| 014 | Adjustment: Gamma | *ENG | [0 to 2.55 / **0** / 0.01 mg/cm$^2$/kV /step] |
| 015 | Adjustment: Vcnt Result | *ENG | [0 to 9 / **9** / 1 /step] |

| | | | |
|---|---|---|---|
| **3800** | **[Toner Collection Bottle Full Detection]** | | |
| | Displays/ adjusts the toner collection bottle detection settings. These SPs are used for NRS. | | |
| 001 | Condition | *CTL | [0 to 4 / **0** / 1 /step] |
| 002 | Detection Times | *CTL | [0 to 50 / **-** / 1 /step] |
| 003 | Print Page After Near Full | *CTL | [0 to 1000 / **0** / 1 sheet/step] |
| 004 | Pixel Count After Near Full | *CTL | [0 to 200000 / **-** / 1 $cm^2$/step] |
| 005 | Pixel Count After Replacement | *CTL | Displays the pixel counter after replacement of toner collection bottle.<br>[0 to 200000 / **-** / 1 $cm^2$/step] |
| 008 | Coefficient | *ENG | [0.5 to 1.5 / **1** / 0.1 /step] |
| 011 | Notice Setting | *ENG | Enables or disables the calling for @Remote.<br>[0 or 1 / **1** / - ]<br>0: Enable @Remote calling<br>1: Disable @Remote calling |
| | **NOTE:**<br>If the toner collection bottle has been replaced before the machine detects used toner near full when this setting is set to "0", the machine cannot detect toner collection bottle near full. In that case, set SP3-902-017 to "1". | | |
| 012 | Day Threshold: Toner Collection bottle:NF | *ENG | [1 to 30 / **5** / 1 day/step] |
| | Sets the threshold days for the near-full display. The near-full of the toner collection bottle is displayed after the toner collection full sensor has detected the actuator in the toner collection bottle. | | |

| | | | |
|---|---|---|---|
| 013 | Total:Toner Collection Bottle | *ENG | Displays the total amount of the used toner.<br>[0 to 999999999 / **1** / 1] |
| 014 | Mechanism Full Detection Date | *ENG | Displays the date of the full detection fot the toner collection bottle. |

| | | | |
|---|---|---|---|
| **3900** | **[Toner Collection Bottle Full Detection]** | | |
| | Turns toner collection bottle full detection on or off. | | |
| 001 | ON/OFF Setting | *ENG | [0 or 1 / **1** / - ]<br>0: OFF, 1: ON |

| | | | |
|---|---|---|---|
| **3901** | **[New PCU Detection]** | | |
| | Turns new PCU detection on or off. | | |
| 001 | ON/OFF Setting | *ENG | [0 or 1 / **1** / - ]<br>0: OFF, 1: ON |

| | | | |
|---|---|---|---|
| **3902** | **[Manual New Unit Set]** | | |
| | Turns the new unit detection flag for each PM unit on or off.<br>The use of these counters is explained in the PM section and in the relevant parts of section 3 (Replacement and Adjustment). | | |
| 001 | Development Unit: Bk | *ENG | [0 or 1 / **0** / - ]<br>0: OFF, 1: ON |
| 002 | Development Unit: Y | *ENG | |
| 003 | Development Unit: C | *ENG | |
| 004 | Development Unit: M | *ENG | |

| | | | |
|---|---|---|---|
| 005 | Developer: Bk | *ENG | [0 or 1 / **0** / - ]<br>0: OFF, 1: ON |
| 006 | Developer: Y | *ENG | |
| 007 | Developer: C | *ENG | |
| 008 | Developer: M | *ENG | |
| 009 | PCU: Bk | *ENG | [0 or 1 / **0** / - ]<br>0: OFF, 1: ON |
| 010 | PCU: Y | *ENG | |
| 011 | PCU: M | *ENG | |
| 012 | PCU: C | *ENG | |
| 013 | Image Transfer Unit | *ENG | [0 or 1 / **0** / - ]<br>0: OFF, 1: ON<br>Do not use 3902-013 if you only change the cleaning unit.<br>3902-015: This is for the image transfer belt cleaning unit. |
| 014 | Fusing Unit | *ENG | |
| 015 | Cleaning Unit | *ENG | |
| 016 | Paper Transfer Unit | *ENG | |
| 017 | Toner Collection Bottle | *ENG | |

## *SP4-XXX (Scanner)*

| | | | |
|---|---|---|---|
| **4008** | **[Sub Scan Magnification Adjustment]** | | |
| | Adjusts the sub-scan magnification by changing the scanner motor speed. | | |
| 001 | Sub Scan Magnification Adjustment | *ENG | [-1.0 to 1.0 / **0** / 0.1%/step] **FA** |

| | | | |
|---|---|---|---|
| **4010** | **[Leading Edge Registration Adjustment]** | | |
| | Adjusts the leading edge registration by changing the scanning start timing in the sub-scan direction. | | |
| 001 | | *ENG | [-2.0 to 2.0 / **0** / 0.1 mm/step] **FA** |

| | | | |
|---|---|---|---|
| **4011** | **[Side-to-Side registration Adjustment]** | | |
| | Adjusts the side-to-side registration by changing the scanning start timing in the main scan direction. | | |
| 001 | - | *ENG | [-2.5 to 2.5 / **0** / 0.1 mm/step ] **FA** |

| | | | |
|---|---|---|---|
| **4012** | **[Scanner Erase Margin: Scale]** Scanner: Erase Margin: Scale | | |
| | Sets the blank margin at each side for erasing the original shadow caused by the gap between the original and the scale. | | |
| 001 | Book: Leading Edge | *ENG | [0 to 3.0 / **0** / 0.1 mm/step ] **FA** |
| 002 | Book: Trailing Edge | | |
| 003 | Book: Left | | |
| 004 | Book: Right | | |
| 005 | ADF: Leading Edge | *ENG | [0 to 3.0 / **0** / 0.1 mm/step ] **FA** |
| 007 | ADF: Right | | |
| 008 | ADF: Left | | |

| | | | |
|---|---|---|---|
| **4013** | **[Scanner Free Run]** | | |
| | Performs the scanner free run with the exposure lamp on or off in the following mode.<br>Full color mode / Full Size / A3 or DLT | | |
| 001 | Lamp: ON | *ENG | [0 or 1 / **0** / - ]<br>0: OFF, 1: ON |
| 002 | Lamp: OFF | | |

| | | | |
|---|---|---|---|
| **4014** | **[Scan]** | | |
| | Execute the scanner free fun with each mode. | | |
| 001 | HP Detection Enable | - | Scanner free run with HP sensor check. |
| 002 | HP Detection Disable | - | Scanner free run without HP sensor check. |

| **4020** | **[Dust Check]** | | |
|---|---|---|---|
| 001 | Detection: ON/OFF | *ENG | Turns the ADF scan glass dust check on/off.<br>[0 or 1 / **0** / 1 /step]<br>0: OFF, 1: ON |
| 002 | Dust Detect: Level | *ENG | Selects the detect level.<br>[0 to 8 / **4** / 1 /step]<br>0: lowest detection level<br>8: highest detection level |
| 003 | Correction Level | *ENG | Selects the level of the sub scan line correction when using the ARDF.<br>[0 to 4 / **0** / 1 /step]<br>0: Off<br>1: Weakest<br>2: Weak<br>3: Strong<br>4: Strongest |

| **4301** | **[APS Operation Check]** | | |
|---|---|---|---|
| | Displays a code that represents the original size detected by the original sensors. (See "Input Check Table".) | | |
| 001 | APS Operation Check | - | - |

| | | | |
|---|---|---|---|
| **4303** | **[APS Min Size (A5/HLT/16K)]** | | |
| | Specifies the result of the detection when the outputs from the original sensors are all OFF. | | |
| 001 | APS Min. Size<br>**(A5/HLT/16K)** | *ENG | [0 to 2 / **0** / 1 /step]<br>0: No Original<br>1: A5-Lengthwise (16K SEF if 4305 is set to 3)<br>2: A5-Sideways (16K LEF if 4305 is set to 3) |

| | | | |
|---|---|---|---|
| **4305** | **[8K/16K Detection]** | *ENG | [0 to 3 / **0** / 1 /step]<br>0: Normal Detection (the machine detects A4/LT size as A4 or LT, depending on the paper size setting)<br>1: A4-Sideways LT-Lengthwise<br>2: LT-Sideways A4-Lengthwise<br>3: 8K 16K |
| 001 | This program enables the machine to automatically recognize the 8K/16K size. | | |

| | | | |
|---|---|---|---|
| **4400** | **[Scanner Erase Margin]** | *ENG | |
| | Set the Mask for Original.<br>These SPs set the area to be masked during platen (book) mode scanning. | | |
| 001 | Book: Leading Edge | [0 to 3.0 / **0** / 0.1 mm/step] | |
| 002 | Book: Trailing Edge | | |
| 003 | Book: Left | | |
| 004 | Book: Right | | |
| 005 | ADF: Leading Edge | | |
| 007 | ADF: Right | | |
| 008 | ADF: Left | | |

| | | | |
|---|---|---|---|
| **4417** | **[IPU Test Pattern]** | | |
| | Selects the IPU test pattern. | | |
| 001 | Test Pattern Selection | [0 to 24 / **0** / 1/step ]<br>0: Scanned image<br>1: Gradation main scan A<br>2: Gradation main scan B<br>3: Gradation main scan C<br>4: Gradation main scan D<br>5: Gradation sub scan (1)<br>6: Grid pattern<br>7: Slant grid pattern<br>8: Gradation RGBCMYK<br>9: UCR pattern<br>10: Color patch 16 (1)<br>11: Color patch 16 (2)<br>12: Color patch 64 | 13: Grid pattern CMYK<br>14: Color patch CMYK<br>15: Gray pattern (1)<br>16: Gray pattern (2)<br>17: Gray Pattern (3)<br>18: Shading pattern<br>19: Thin line pattern<br>20: Scanned + Grid pattern<br>21: Scanned + Gray scale<br>22: Scanned + Color patch<br>23: Scanned + Slant Grid C<br>24: Scanned + Slant Grid D |

| **4429** | **[Illegal Copy Output]** | | |
|---|---|---|---|
| 001 | Copy | *ENG | [0 to 3 / **3** / 1 /step] |
| 002 | Scanner | | |
| 003 | Fax | | |

| **4440** | **[Saturation Adjustment]** | | |
|---|---|---|---|
| | Adjusts the level of saturation for copying. | | |
| 001 | Saturation Adj. 1 | *ENG | [0 to 5 / **3** / 1 /step]<br>0: High<br>1: Lowest<br>2: Lower<br>3: Default<br>4: Higher<br>5: Highest |

| **4450** | **[Scan Image Path Selection]** | |
|---|---|---|
| 001 | Black Subtraction ON/OFF | [0 or 1 / **1** / - ] 0: OFF, 1: ON |
| | Uses or does not use the black reduction image path. | |
| 002 | SH ON/OFF | [0 or 1 / **0** / 1 /step] 0: ON, 1: OFF |
| | Uses or does not use the shading image path. | |

| | | | |
|---|---|---|---|
| **4460** | **[Digital AE Set] DFU** | | |
| | Specifies the level of deleting the background in the ADS mode. You can adjust its level for each scanning method (platen, ADF). | | |
| 001 | Lower Limit | *ENG | [0 to 1023 / **364** / 4 digit/step] |
| 002 | Background Level | *ENG | [512 to 1532 / **932** / 1 digit/step] |

| | | | |
|---|---|---|---|
| **4501** | **[ACC Target Density]** | | |
| | Selects the ACC result. | | |
| 001 | Copy: Bk: Text | *ENG | [0 to 10 / **5** / 1 /step]<br>10: Darkest density |
| 002 | Copy: C: Text | *ENG | |
| 003 | Copy: M: Text | *ENG | |
| 004 | Copy: Y: Text | *ENG | |
| 005 | Copy: Bk: Photo | *ENG | |
| 006 | Copy: C: Photo | *ENG | |
| 007 | Copy: M: Photo | *ENG | |
| 008 | Copy: Y: Photo | *ENG | |

| | | | |
|---|---|---|---|
| **4505** | **[ACC Offset: Light]** | | |
| | Adjusts the offset correction for light areas of the ACC pattern. | | |
| 001 | Self Machine: Bk | *ENG | [-128 to 127 / **0** / 1 /step] |
| 002 | Self Machine: M | *ENG | |
| 003 | Self Machine: C | *ENG | |
| 004 | Self Machine: Y | *ENG | |
| 005 | Other Machine: Bk | *ENG | Reserved |
| 006 | Other Machine: M | *ENG | |
| 007 | Other Machine: C | *ENG | |
| 008 | Other Machine: Y | *ENG | |

| | | | |
|---|---|---|---|
| **4506** | **[ACC Offset: Dark]** | | |
| | Adjusts the offset correction for dark areas of the ACC pattern. | | |
| 001 | Self Machine: Bk | *ENG | [-128 to 127 / **0** / 1 /step] |
| 002 | Self Machine: M | *ENG | |
| 003 | Self Machine: C | *ENG | |
| 004 | Self Machine: Y | *ENG | |
| 005 | Other Machine: Bk | *ENG | Reserved |
| 006 | Other Machine: M | *ENG | |
| 007 | Other Machine: C | *ENG | |
| 008 | Other Machine: Y | *ENG | |

| | | | |
|---|---|---|---|
| **4540** | **[Printer Vector Correction]** | | |
| | This SP corrects the printer coverage of 12 hues (RY, YR, YG, etc. x 4 Colors [R, G, B, Option]) for a total of 48 parameters. | | |
| 001-004 | RY Phase: Option/R/G/B | *ENG | Specifies the printer vector correction value.<br>[0 to 255 / **0** / 1 /step] |
| 005-008 | YR Phase: Option/R/G/B | | |
| 009-012 | YG Phase: Option/R/G/B | | |
| 013-016 | GY Phase: Option/R/G/B | | |
| 017-020 | GC Phase: Option/R/G/B | | |
| 021-024 | CG Phase: Option/R/G/B | | |
| 025-028 | CB Phase: Option/R/G/B | | |
| 029-032 | BC Phase: Option/R/G/B | | |
| 033-036 | BM Phase: Option/R/G/B | | |
| 037-040 | MB Phase: Option/R/G/B | | |
| 041-044 | MR Phase: Option/R/G/B | | |
| 045-048 | RM Phase: Option/R/G/B | | |

| | |
|---|---|
| **4550** | **[Scanner Application: text/Printing] DFU** |
| **4551** | **[Scanner Application: text] DFU** |
| **4552** | **[Scanner Application: text (Drop Out Coor)] DFU** |
| **4553** | **[Scanner Application: text-Photo] DFU** |
| **4554** | **[Scanner Application: Photo] DFU** |
| **4565** | **[Scanner Application: GrayScale] DFU** |

| | | | |
|---|---|---|---|
| **4570** | **[Scanner Application: Color: Text-Photo] DFU** | | |
| **4571** | **[Scanner Application: Color: Glossy Photo] DFU** | | |
| **4572** | **[Scanner Application: AutoColor] DFU** | | |
| -005 | MTF: 0 (Off), 1-15 (Strong) | *ENG | [0 to 15 / **8** / 1 /step]<br>0: MTF Off |
| | Sets the MTF level (Modulation Transfer Function) designed to improve image contrast. Set higher for stronger effect, lower for weaker effect. | | |
| -006 | Smoothing: 0 (x1), 1-7 (Strong) | *ENG | [0 to 7 / **4** / 1 /step] |
| | Use to remove "jaggies" if they appear. Set higher for smoother images. | | |
| -007 | Brightness: 1–255 | *ENG | [1 to 255 / **128** / 1 /step] |
| | Set higher for darker, set lower for lighter. | | |
| -008 | Contrast: 1–255 | *ENG | [1 to 255 / **128** / 1 /step] |
| | Set higher for more contrast, set lower for less contrast. | | |
| -009 | Independent Dot Erase (0), 1-7 (Strong) | *ENG | [0 to 7 / **0** / 1 /step] |
| | Sets the erasure level of Irregular Dots. Set higher for stronger effect, lower for weaker effect.<br>0: Not activated | | |

| | | | |
|---|---|---|---|
| **4580** | **[FAX Application: Text/Chart] DFU** | | |
| **4582** | **[FAX Application: Text/Photo] DFU** | | |
| **4583** | **[FAX Application: Photo] DFU** | | |
| -005 | MTF: 0 (Off), 1-15 (Strong) | *ENG | [0 to 15 / **8** / 1 /step]<br>0: MTF Off |
| | Sets the MTF level (Modulation Transfer Function) designed to improve image contrast. Set higher for stronger effect, lower for weaker effect. | | |
| -006 | Smoothing: 0 (x1), 1-7 (Strong) | *ENG | [0 to 7 / **4** / 1 /step] |
| | Use to remove "jaggies" if they appear. Set higher for smoother images. | | |
| -007 | Brightness: 1–255 | *ENG | [1 to 255 / **128** / 1 /step] |
| | Set higher for darker, set lower for lighter. | | |
| -008 | Contrast: 1–255 | *ENG | [1 to 255 / **128** / 1 /step] |
| | Set higher for more contrast, set lower for less contrast. | | |
| -009 | Independent Dot Erase (0), 1-7 (Strong) | *ENG | [0 to 7 / **0** / 1 /step] |
| | Selects the contrast level for B/W the Text mode. Sets the erasure level of Irregular Dots. Set higher for stronger effect, lower for weaker effect.<br>0: Not activated | | |
| -010 | Texture Erase: 0 | *ENG | [0 to 2 / **0** / 1 /step] |
| | Sets the erasure level of textures. Set higher for stronger effect, lower for weaker effect. This SP (suffix "-010") only exists in SP4580, 4582 and 4583.<br>0: Not activated | | |

| | | | |
|---|---|---|---|
| **4581** | **[FAX Application: Text] DFU** | | |
| **4584** | **[FAX Application: Original 1] DFU** | | |
| **4585** | **[FAX Application: Original 2] DFU** | | |
| -005 | MTF: 0 (Off), 1-15 (Strong) | *ENG | [0 to 15 / **8** / 1 /step]<br>0: MTF Off |
| | Sets the MTF level (Modulation Transfer Function) designed to improve image contrast. Set higher for stronger effect, lower for weaker effect. | | |
| -006 | Smoothing: 0 (x1), 1-7 (Strong) | *ENG | [0 to 7 / **4** / 1 /step] |
| | Use to remove "jaggies" if they appear. Set higher for smoother images. | | |
| -007 | Brightness: 1–255 | *ENG | [1 to 255 / **128** / 1 /step] |
| | Set higher for darker, set lower for lighter. | | |
| -008 | Contrast: 1–255 | *ENG | [1 to 255 / **128** / 1 /step] |
| | Set higher for more contrast, set lower for less contrast. | | |
| -009 | Independent Dot Erase (0), 1-7 (Strong) | *ENG | [0 to 7 / **0** / 1 /step] |
| | Selects the contrast level for B/W the Text mode. Sets the erasure level of Irregular Dots. Set higher for stronger effect, lower for weaker effect.<br>0: Not activated | | |

| | | | |
|---|---|---|---|
| **4600** | **[SBU Version Display]** | | |
| 001 | SBU_ID | - | [0 to 0xFF / **0** / 1 /step]<br>Displays the ID of the SBU. |
| 002 | GASBU-N_ID | - | [0 to 0xFF / **0** / 1 /step] |
| 003 | VSP5100_ID | - | [0 to 0xFF / **0** / 1 /step] |

| **4602** | **[Scanner Memory Access]** | | |
|---|---|---|---|
| 001 | Scanner Memory Access | - | Enables the read and write check for the SBU registers. |
| 002 | Address Set | - | Not used |
| 003 | Data Set | - | |

| **4603** | **[AGC Execution]** | | |
|---|---|---|---|
| 001 | HP Detection Enable | - | [0 or 1 / **0** / 1/step] Executes the AGC. |
| 002 | HP Detection Disable | - | [0 or 1 / **0** / 1/step] **DFU** |

| **4604** | **[FGATE Open/Close] DFU** | | |
|---|---|---|---|
| 001 | - | - | Opens or closes the FGATE signal. This SP automatically returns to the default status (close) after exiting this SP.<br>[0 or 1 / **0** / 1/step]<br>0: OFF, 1: ON |

| **4609** | **[Gray Balance Set: R]** | | |
|---|---|---|---|
| 001 | Book Read | - | [-512 to 511 / **-46** / 1 digit/step] |
| 002 | DF Read | - | [-512 to 511 / **-46** / 1 digit/step] |

| **4610** | **[Gray Balance Set: G]** | | |
|---|---|---|---|
| 001 | Book Read | - | [-512 to 511 / **-20** / 1 digit/step] |
| 002 | DF Read | - | [-512 to 511 / **-20**/ 1 digit/step] |

| **4611** | **[Gray Balance Set: B]** | | |
|---|---|---|---|
| 001 | Book Read | - | [-512 to 511 / **-28** / 1 digit/step] |
| 002 | DF Read | - | [-512 to 511 / **-28** / 1 digit/step] |

| **4623** | **[Black Level Adj. Display]**<br>RE: Red Even signal, RO: Red Odd signal | | |
|---|---|---|---|
| 001 | Latest: RE Color | - | Displays the black offset value (rough adjustment) for the even red signal in the CCD circuit board (color printing speed).<br>[0 to 16383 / **0** / 1 digit/step] |
| 002 | Latest: RO Color | - | Displays the black offset value (rough adjustment) for the odd red signal in the CCD circuit board (color printing speed).<br>[0 to 16383 / **0** / 1 digit/step] |

| **4624** | **[Black Level Adj. Display]**<br>GE: Green Even signal, GO: Green Odd signal | | |
|---|---|---|---|
| 001 | Latest: GE Color | - | Displays the black offset value (rough adjustment) for the even green signal in the CCD circuit board (color printing speed).<br>[0 to 16383 / **0** / 1 digit/step] |
| 002 | Latest: GO Color | - | Displays the black offset value (rough adjustment) for the odd green signal in the CCD circuit board (color printing speed).<br>[0 to 16383 / **0** / 1 digit/step] |

| | | | |
|---|---|---|---|
| **4625** | **[Black Level Adj. Display]**<br>BE: Blue Even signal, BO: Blue Odd signal | | |
| 001 | Latest: BE Color | - | Displays the black offset value (rough adjustment) for the even blue signal in the CCD circuit board (color printing speed).<br>[0 to 16383 / **0** / 1 digit/step] |
| 002 | Latest: BO Color | - | Displays the black offset value (rough adjustment) for the odd blue signal in the CCD circuit board (color printing speed).<br>[0 to 16383 / **0** / 1 digit/step] |

| | | | |
|---|---|---|---|
| **4628** | **[Gain Adjustment: Analog]** | | |
| | Displays the gain value of the amplifiers on the controller for Red. | | |
| 001 | Latest: R Color | - | [0 to 7 / **0** / 1 digit/step] |

| | | | |
|---|---|---|---|
| **4629** | **[Gain Adjustment: Analog]** | | |
| | Displays the gain value of the amplifiers on the controller for Green. | | |
| 001 | Latest: G Color | - | [0 to 7 / **0** / 1 digit/step] |

| | | | |
|---|---|---|---|
| **4630** | **[Gain Adjustment: Analog]** | | |
| | Displays the gain value of the amplifiers on the controller for Blue. | | |
| 001 | Latest: B Color | - | [0 to 7 / **0** / 1 digit/step] |

| | | | |
|---|---|---|---|
| **4631** | **[Gain Adjustment: Digital]** | | |
| | Displays the gain value of the amplifiers on the controller for Red. | | |
| 001 | Latest: RE Color | - | [0 to 1023 / **0** / 1 digit/step] |
| 002 | Latest: RO Color | - | |

| | | | |
|---|---|---|---|
| **4632** | **[Gain Adjustment: Digital]** | | |
| | Displays the gain value of the amplifiers on the controller for Green. | | |
| 001 | Latest: GE Color | - | [0 to 1023 / **0** / 1 digit/step] |
| 002 | Latest: GO Color | - | |

| | | | |
|---|---|---|---|
| **4633** | **[Gain Adjustment: Digital]** | | |
| | Displays the gain value of the amplifiers on the controller for Blue. | | |
| 001 | Latest: BE Color | - | [0 to 1023 / **0** / 1 digit/step] |
| 002 | Latest: BO Color | - | |

| | | | |
|---|---|---|---|
| **4645** | **[Scan Adj. Time Out Error]** | | |
| | Displays the gain value of the amplifiers on the controller for Blue. | | |
| 001 | White Offset Correction | - | [0 to 65535 / **0** / 1 digit/step] |
| 002 | Black Offset Correction | - | |

| | | | |
|---|---|---|---|
| **4647** | **[Read Hard Error]** | | |
| | Displays the result of the SBU connection check. | | |
| 001 | Power-ON | - | [0 to 35535 / **0** / 1digit /step]<br>0: OK, Other: SBU connection check failure<br>If the SBU connection check fails, SC144 occurs. |

| | | | |
|---|---|---|---|
| **4654** | **[Black Level Adj. Display]**<br>RE: Red Even signal, RO: Red Odd signal | | |
| 001 | Last Correct Value: RE Color | *ENG | Displays the black offset value (rough adjustment) for the even red signal in the CCD circuit board (color printing speed).<br>[0 to 16383 / **0** / 1 digit/step] |
| 002 | Last Correct Value: RO Color | *ENG | Displays the black offset value (rough adjustment) for the odd red signal in the CCD circuit board (color printing speed).<br>[0 to 16383 / **0** / 1 digit/step] |

| | | | |
|---|---|---|---|
| **4655** | **[Black Level Adj. Display]**<br>GE: Green Even signal, GO: Green Odd signal | | |
| 001 | Last Correct Value: GE Color | *ENG | Displays the black offset value (rough adjustment) for the even green signal in the CCD circuit board (color printing speed).<br>[0 to 16383 / **0** / 1 digit/step] |
| 002 | Last Correct Value: GO Color | *ENG | Displays the black offset value (rough adjustment) for the odd green signal in the CCD circuit board (color printing speed).<br>[0 to 16383 / **0** / 1 digit/step] |

| | | | |
|---|---|---|---|
| **4656** | **[Black Level Adj. Display]**<br>BE: Blue Even signal, BO: Blue Odd signal | | |
| 001 | Last Correct Value: BE Color | *ENG | Displays the black offset value (rough adjustment) for the even blue signal in the CCD circuit board (color printing speed).<br>[0 to 16383 / **0** / 1 digit/step] |
| 002 | Last Correct Value: BO Color | *ENG | Displays the black offset value (rough adjustment) for the odd blue signal in the CCD circuit board (color printing speed).<br>[0 to 16383 / **0** / 1 digit/step] |

| | | | |
|---|---|---|---|
| **4658** | **[Gain Adjustment: Analog]** | | |
| | Displays the previous gain value of the amplifiers on the controller for Red. | | |
| 001 | Last Correct Value: R Color | *ENG | [0 to 7 / **0** / 1 digit/step] |

| | | | |
|---|---|---|---|
| **4659** | **[Gain Adjustment: Analog]** | | |
| | Displays the previous gain value of the amplifiers on the controller for Green. | | |
| 001 | Last Correct Value: G Color | *ENG | [0 to 7 / **0** / 1 digit/step] |

| | | | |
|---|---|---|---|
| **4660** | **[Gain Adjustment: Analog]** | | |
| | Displays the previous gain value of the amplifiers on the controller for Blue. | | |
| 001 | Last Correct Value: B Color | *ENG | [0 to 7 / **0** / 1 digit/step] |

| | | | |
|---|---|---|---|
| **4661** | **[Gain Adjustment: Digital]**<br>RE: Red Even signal, RO: Red Odd signal | | |
| 001 | Last Correct Value: RE Color | *ENG | [0 to 1023 / **0** / 1 digit/step] |
| 002 | Last Correct Value: RO Color | *ENG | |

| | | | |
|---|---|---|---|
| **4662** | **[Gain Adjustment: Digital]**<br>GE: Green Even signal, GO: Green Odd signal | | |
| 001 | Last Correct Value: GE Color | *ENG | [0 to 1023 / **0** / 1 digit/step] |
| 002 | Last Correct Value: GO Color | *ENG | |

| | | | |
|---|---|---|---|
| **4663** | **[Gain Adjustment: Digital]**<br>BE: Blue Even signal, BO: Blue Odd signal | | |
| 001 | Last Correct Value: BE Color | *ENG | [0 to 1023 / **0** / 1 digit/step] |
| 002 | Last Correct Value: BO Color | *ENG | |

| | | | |
|---|---|---|---|
| **4673** | **[Black Level Adj. Display]**<br>RE: Red Even signal, RO: Red Odd signal | | |
| 001 | Factory Setting: RE Color | *ENG | Displays the factory setting values of the black level adjustment for the even red signal in the CCD circuit board (color printing speed)..<br>[0 to 16383 / **0** / 1 digit/step] |
| 002 | Factory Setting: RO Color | *ENG | Displays the factory setting values of the black level adjustment (rough adjustment) for the odd red signal in the CCD circuit board (color printing speed).<br>[0 to 16383 / **0** / 1 digit/step] |

| | | | |
|---|---|---|---|
| **4674** | **[Black Level Adj. Display]**<br>GE: Green Even signal, GO: Green Odd signal | | |
| 001 | Factory Setting: GE Color | *ENG | Displays the factory setting values of the black level adjustment (rough adjustment) for the even green signal in the CCD circuit board (color printing speed).<br>[0 to 16383 / **0** / 1 digit/step] |
| 002 | Factory Setting: GO Color | *ENG | Displays the factory setting values of the black level adjustment (rough adjustment) for the odd green signal in the CCD circuit board (color printing speed).<br>[0 to 16383 / **0** / 1 digit/step] |

| | | | |
|---|---|---|---|
| **4675** | **[Black Level Adj. Display]**<br>BE: Blue Even signal, BO: Blue Odd signal | | |
| 001 | Factory Setting: BE Color | *ENG | Displays the factory setting values of the black level adjustment (rough adjustment) for the even blue signal in the CCD circuit board (color printing speed).<br>[0 to 16383 / **0** / 1 digit/step] |
| 002 | Factory Setting: BO Color | *ENG | Displays the factory setting values of the black level adjustment (rough adjustment) for the odd blue signal in the CCD circuit board (color printing speed).<br>[0 to 16383 / **0** / 1 digit/step] |

| | | | |
|---|---|---|---|
| **4677** | **[Gain Adjustment: Analog]** | | |
| | Displays the factory setting values of the gain adjustment for Red. | | |
| 001 | Factory Setting: R Color | *ENG | [0 to 7 / **0** / 1 digit/step] |

| | | | |
|---|---|---|---|
| **4678** | **[Gain Adjustment: Analog]** | | |
| | Displays the factory setting values of the gain adjustment for Green. | | |
| 001 | Factory Setting: G Color | *ENG | [0 to 7 / **0** / 1 digit/step] |

| | | | |
|---|---|---|---|
| **4679** | **[Gain Adjustment: Analog]** | | |
| | Displays the factory setting values of the gain adjustment for Blue. | | |
| 001 | Factory Setting: BE Color | *ENG | [0 to 7 / **0** / 1 digit/step] |

| | | | |
|---|---|---|---|
| **4680** | **[Gain Adjustment: Digital]** | | |
| | Displays the gain value of the amplifiers on the controller for Red. | | |
| 001 | Factory Setting: RE Color | *ENG | [0 to 1023 / **0** / 1 digit/step] |
| 002 | Factory Setting: RO Color | *ENG | |

| | | | |
|---|---|---|---|
| **4681** | **[Gain Adjustment Digital]** | | |
| | Displays the gain value of the amplifiers on the controller for Green. | | |
| 001 | Factory Setting: GE Color | *ENG | [0 to 1023 / **0** / 1 digit/step] |
| 002 | Factory Setting: GO Color | *ENG | |

| | | | |
|---|---|---|---|
| **4682** | **[Gain Adjustment Digital]** | | |
| | Displays the gain value of the amplifiers on the controller for Blue. | | |
| 001 | Factory Setting: BE Color | *ENG | [0 to 1023 / **0** / 1 digit/step] |
| 002 | Factory Setting: BO Color | *ENG | |

| | | | |
|---|---|---|---|
| **4688** | **[DF: Density Adjustment]** | | |
| | Adjusts the white shading parameter when scanning an image with the ARDF. Adjusts the density level if the ID of outputs made in the DF and Platen mode is different. | | |
| 001 | - | *ENG | [50 to 150 / **100** / 1%/ step ] |

| | | | |
|---|---|---|---|
| **4690** | **[White Level Peak Read]** | | |
| | Displays the peak level of the white level scanning. | | |
| 001 | RE | - | [0 to 1023 / **0** / 1 digit/step] |
| 002 | RO | - | |

| | | | |
|---|---|---|---|
| **4691** | **[White Level Peak Read]** | | |
| | Displays the peak level of the white level scanning. | | |
| 001 | GE | - | [0 to 1023 / **0** / 1 digit/step] |
| 002 | GO | - | |

| | | | |
|---|---|---|---|
| **4692** | **[White Level Peak Read]** | | |
| | Displays the peak level of the white level scanning. | | |
| 001 | BE | - | [0 to 1023 / **0** / 1 digit/step] |
| 002 | BO | - | |

| | | | |
|---|---|---|---|
| **4693** | **[Black Level Read]** | | |
| | Displays the peak level of the black level scanning. | | |
| 001 | RE | - | [0 to 1023 / **0** / 1 digit/step] |
| 002 | RO | - | |

| | | | |
|---|---|---|---|
| **4694** | **[Black Level Read]** | | |
| | Displays the peak level of the black level scanning. | | |
| 001 | GE | - | [0 to 1023 / **0** / 1 digit/step] |
| 002 | GO | - | |

| | | | |
|---|---|---|---|
| **4695** | **[Black Level Read]** | | |
| | Displays the peak level of the black level scanning. | | |
| 001 | BE | - | [0 to 1023 / **0** / 1 digit/step] |
| 002 | BO | - | |

| | | | |
|---|---|---|---|
| **4802** | **[DF Shading FreeRun]** | | |
| 001 | Lamp ON | - | Executes the scanner free run of shading movement with exposure lamp on or off. Press "OFF" to stop this free run. Otherwise, the free run lasts. |
| 002 | Lamp OFF | | |

| | | | |
|---|---|---|---|
| **4803** | **[Home Position Adjustment]** | | |
| 001 | - | - | [-1 to 1 / **0** / 0.1 mm/step] |

| **4804** | **[Home Position]** | | |
|---|---|---|---|
| 001 | - | - | Executes the scanner HP detection. |

| **4806** | **[Carriage Save]** | | |
|---|---|---|---|
| 001 | - | - | Moves the carriage from the scanner home position.<br>Dust may fall through the DF exposure glass. Therefore, do this SP when you transport the machine a long distance. |

| **4807** | **[SBU Test Pattern Change]** | | |
|---|---|---|---|
| 001 | - | - | [0 to 255 / **0** / 1 /step] |

| **4902** | **[ACC Data Display]** | | |
|---|---|---|---|
| | This SP outputs the final data read at the end of ACC execution.<br>A zero is returned if there was an error reading the data.<br>[0 to 255 / **0** / 1 /step] | | |
| 001 | R DATA1 | *ENG | Photo C Patch Level 1 (8-bit) |
| 002 | G DATA1 | *ENG | Photo M Patch Level 1 (8-bit) |
| 003 | B DATA1 | *ENG | Photo Y Patch Level 1 (8-bit) |
| 004 | R DATA2 | *ENG | Photo C Patch Level 17 (8-bit) |
| 005 | G DATA2 | *ENG | Photo M Patch Level 17(8-bit) |
| 006 | B DATA2 | *ENG | Photo Y Patch Level 17 (8-bit) |

| **4904** | **[Scanner IPU Board Test]** | | |
|---|---|---|---|
| 001 | Test1 | - | Bit0: TAURUS register<br>Bit1: ORION register<br>Bit2: LUPUS register<br>Bit3 to 11: Not used<br>Bit12: Ri20<br>Bit13 to 15: Not used<br>0: OK, 1: Error |
| | Performs a write and read check of the ASICs on the BICU board and displays the result. | | |
| 002 | Test2 | - | Bit0: Image path from SBU to TAURUS<br>Bit1: Image path from TAURUS to ORION<br>Bit2: Image path from ORION to TAURUS<br>Bit3: Image path from TAURUS to LUPUS<br>Bit4 to 11: Not used<br>Bit12: Image path from LUPUS to Ri20<br>Bit13: Image path from Ri20 to GAVD<br>Bit14 and 15: Not used<br>0: OK, 1: Error |
| | Performs an image path check on the BICU board and displays the result. | | |

| **4905** | **[Dither Selection] DFU** | | |
|---|---|---|---|
| | Changes the parameters for error diffusion. | | |
| 001 | Dither Selection | *ENG | [0 to 255 / **0** / 1 /step] **DFU** |

| | | | |
|---|---|---|---|
| **4918** | **[Manual Gamma Adj.]** | | |
| | Adjusts the offset data of the printer gamma for yellow in Photo mode. | | |
| 009 | Change | - | Enter the manual gamma adjustment screen (-001 to 008). |

| | | | |
|---|---|---|---|
| **4954** | **[Standard Chart Scan: Clear Setting]** | | |
| | - | | |
| 001 | Execution | *ENG | [0 or 1 / **0** / - /step] |
| 002 | Clear Setting | | |
| 004 | Rewrite Target | | |

| | | | |
|---|---|---|---|
| **4991** | **[IPU Image Pass Selection ]** | | |
| | Selects the image path.<br>Enter the number to be selected using the 10-key pad. | | |
| 001 | RGB Frame Memory | *ENG | [0 to 11 / **2** / 1 /step ] |
| | 0: Scanner input RGB images<br>1: Scanner I/F RGB images<br>2: RGB images done by Shading correction (Shading ON, Black offset ON)<br>3: Shading data<br>4: Inner pattern data: Gray scale<br>5: RGB images done by Line skipping correction<br>6: RGB images done by Digital AE<br>7: RGB images done by Vertical line correction<br>8: RGB image done by Scanner gamma correction<br>9: RGB image done by Filtering correction<br>10: RGB images done by Full color ADS<br>11: RGB image done by Color correction | | |

| **4993** | **[High Light Correction]** | | |
|---|---|---|---|
| 001 | Sensitivity Selection | *ENG | Selects the Highlight correction level.<br>[0 to 9 / **4** / 1 /step]<br>0: weakest sensitivity<br>9: strongest sensitivity |
| 002 | Range Selection | *ENG | Selects the range level of Highlight correction.<br>[0 to 9 / **4** / 1 /step]<br>0: weakest skew correction,<br>9: strongest skew correction |

| **4994** | **[Text/Photo Detection Level Adj.]** | | |
|---|---|---|---|
| | Selects the definition level between Text and Photo for high compression PDF. | | |
| 001 | PDF Sensitivity Level text/photo | *ENG | [0 to 2 / **1** / 1 /step]<br>0: Text priority<br>1: Normal<br>2: Photo priority |

## *SP5-XXX (Mode)*

| | | | |
|---|---|---|---|
| **5024** | **[mm/inch Display Selection]** | | |
| | Display units (mm or inch) for custom paper sizes. | | |
| 001 | 0:mm 1:inch | *CTL | 0: mm (Europe/Asia)<br>1: inch (USA) |

| | | | |
|---|---|---|---|
| **5045** | **[Accounting Counter]** | | |
| | Selects the counting method.<br>**NOTE:** The counting method can be changed only once, regardless of whether the counter value is negative or positive. | | |
| 001 | Counter Method | *CTL | [0 or 1 / **0** / - ]<br>0: Developments<br>1: Prints |

| | | | |
|---|---|---|---|
| **5047** | **[Paper Display]** | | |
| | Turns on or off the printed paper display on the LCD. | | |
| 001 | - | *CTL | [0 or 1 / **0** / - ]<br>0: OFF, 1: ON |

| | | | |
|---|---|---|---|
| **5051** | **[Toner Refill Detection Display]** | | |
| | Enables or disables the toner refill detection display. | | |
| 5051 1 | Toner Refill Detection Display | *CTL | [0 or 1 / **0** / - ] Alphanumeric<br>0: ON<br>1: OFF |

| | | | |
|---|---|---|---|
| **5055** | **[Display IP Address]** | | |
| | Display or does not display the IP address on the LCD. | | |
| 001 | - | *CTL | [0 or 1 / **0** / - ]<br>0: OFF 1: ON |

| | | | |
|---|---|---|---|
| **5056** | **[Coverage Counter Display]** | | |
| | Display or does not display the coverage counter on the LCD. | | |
| 001 | - | *CTL | [0 or 1 / **0** / - ]<br>0: Not display, 1: Display |

| | | | |
|---|---|---|---|
| **5061** | **[Toner Remaining Icon Display]** | | |
| | Display or does not display the remaining toner display icon on the LCD. | | |
| 001 | - | *CTL | [0 or 1 / **0** / - ]<br>0: Not display, 1: Display |

| | | | |
|---|---|---|---|
| **5062** | **[Parts PM Display Setting]** | | |
| | Display or does not display the PM part yield on the LCD. | | |
| 001 | - | *CTL | [0 or 1 / **1** / - ]<br>0: Not display, 1: Display |

| | | | |
|---|---|---|---|
| **5067** | **[Parts PM System Setting]** | | |
| | Selects the service maintenance or user maintenance for each PM parts.<br>If the user service is selected, PM alart is displayed on the LCD. | | |
| 001 | PCU:Bk | *CTL | **[0: Service]** or [1: User] |
| 002 | PCU:M | *CTL | |
| 003 | PCU:C | *CTL | |
| 004 | PCU:Y | *CTL | |
| 005 | Dev Unit:Bk | *CTL | **[0: Service]** or [1: User] |
| 006 | Dev Unit:M | *CTL | |
| 007 | Dev Unit:C | *CTL | |
| 008 | Dev Unit:Y | *CTL | |
| 009 | Developer:Bk | *CTL | **[0: Service]** or [1: User] |
| 010 | Developer:M | *CTL | |
| 011 | Developer:C | *CTL | |
| 012 | Developer:Y | *CTL | |
| 013 | Int Trans Unit | *CTL | **[0: Service]** or [1: User] |
| 014 | Belt Cleaning Unit | *CTL | **[0: Service]** or [1: User] |
| 015 | Fusing Unit | *CTL | **[0: Service]** or [1: User] |
| 016 | Transfer Roller | *CTL | **[0: Service]** or [1: User] |
| 017 | WasteToner Bottle | *CTL | **[0: Service]** or [1: User] |

| | | | |
|---|---|---|---|
| **5104** | **[A3/DLT Double Count] SSP** | | |
| | Specifies whether the counter is double clicked for A3/DLT size prints.<br>When you have to change this SP, ask your supervisor. | | |
| 5104 1 | Double Count | *CTL | [0 to 2 / **0** / 1 /step]<br>0: NO (Normal count)<br>1: YES (Double count)<br>2: YES except By-pass (Normal count for unknown size) |

| | |
|---|---|
| **5112** | **[Non-Std. Paper Sel.]** Non-Standard Paper Selection |
| 001 | Determines whether a non-standard paper size can be input for the universal cassette trays (Tray 2, and Optional paper tray unit trays 1 and 2)<br>[0 or 1/ **0** / - ]<br>0: OFF<br>1: ON, If “1” is selected, the customer will be able to input a non-standard paper size using the UP mode. |

| | | | |
|---|---|---|---|
| **5113** | **[Optional Counter Type]** | | |
| 001 | Default Optional Counter Type | *CTL | This program specifies the counter type.<br>**0**: **None**, 1: Key card (RK 3, 4)<br>2: Key card (down), 3: Prepaid card<br>4: Coin rack, 5: MF key card<br>8: Key counter + Vendor<br>9: Bar-code Printer |
| 002 | External Optional Counter Type | *CTL | This program specifies the external counter type.<br>**0**: **None**<br>1: Expansion Device 1<br>2: Expansion Device 2<br>3: Expansion Device 3 |

| | | | |
|---|---|---|---|
| **5114** | **[Optional Counter I/F]** | | |
| 001 | MF Key Card Extension | *CTL | [**0: Not installed/** 1: Installed (scanning accounting)] |

| | | | |
|---|---|---|---|
| **5118** | **[Disable Copying]** | *CTL | [**0**: Not disabled/ 1: Disabled] |
| 001 | This program disables copying. | | |

| | | | |
|---|---|---|---|
| **5120** | **[Mode Clear Opt. Counter Removal]** | *CTL | [**0**: **Yes (removed)**/ 1: Standby (installed but not used)/ 2: No (not removed)] |
| 001 | This program updates the information on the optional counter. When you install or remove an optional counter, check the settings. | | |

| | | | |
|---|---|---|---|
| **5121** | **[Counter Up Timing]** | *CTL | [**0: Feed**/ 1: Exit] |
| 001 | This program specifies when the counter goes up. The settings refer to “paper feed” and “paper exit” respectively. | | |

| | | | |
|---|---|---|---|
| **5126** | **[F Size Original Setting]** | *ENG | [0 to 2 / **0** / 1 /step]<br>0: 8 1/2" x 13" (Foolscap)<br>1: 8 1/4" x 13" (Folio)<br>2: 8" x 13" (F) |
| 001 | Selects F size original setting. | | |

| | | | |
|---|---|---|---|
| **5127** | **[APS Mode]** | *CTL | [**0**: Not disabled/ 1: Disabled] |
| 001 | This program disables the APS. | | |

| | | | |
|---|---|---|---|
| **5128** | **[Code Mode With Key/Card Option]** | *CTL | - |
| 001 | **DFU** | | |

| | | | |
|---|---|---|---|
| **5131** | **[Paper Size Type Selection]** | *ENG | [0: JP (Japan)/ 1: NA / 2: EU] |
| 001 | The program selects a paper size system from the following alternatives: the AB system (0), the LT system (1), and the AF system (2). | | |

| | | | |
|---|---|---|---|
| **5150** | **[By-Pass Length Setting]** | *CTL | [**0**: OFF/ 1: ON] |
| 001 | Determines whether the transfer sheet from the by-pass tray is used or not. Normally the paper length for sub scanning paper from the by-pass tray is limited to 600 mm, but this can be extended with this SP to 1260 mm. | | |

| | | | |
|---|---|---|---|
| **5162** | **[App. Switch Method]** | *CTL | [**0**: Soft Key Set/ 1: Hard Key Set] |
| 001 | This program specifies the switch that selects an application program. | | |

| | | | |
|---|---|---|---|
| **5167** | **[Fax Printing Mode at Optional]** | | |
| | Enables or disables the automatic print out without an accounting device. This SP is used when the receiving fax is accounted by an external accounting device. | | |
| 001 | Fax Printing Mode at Optional Counter Off | *CTL | [0 or 1 / **0** / - ]<br>0: Automatic printing<br>1: No automatic printing |

| | | | |
|---|---|---|---|
| **5169** | **[CE Login]** | | |
| | If you will change the printer bit switches, you must ‘log in’ to service mode with this SP before you go into the printer SP mode. | | |
| 001 | CE Login | *CTL | [0 or 1 / **0** / - ]<br>0: Disabled<br>1: Enabled |

| | | | |
|---|---|---|---|
| **5179** | **[By-pass Size Error Detection]** | | |
| | Turns on or off the by-pass tray size error message. | | |
| 001 | - | *ENG | [0 or 1 / **0** / 1/step]<br>0: OFF<br>1: ON (Paper size error message is displayed when the paper jam occurs due to the wrong direction of set paper in by-pass mode.) |

| | | | |
|---|---|---|---|
| **5181** | **[Size Adjust]** | | |
| | Adjusts the paper size for each tray. | | |
| 001 | TRAY 1 | *ENG | [0 to 3 / **0 (EU/ASIA), 1 (NA)** / 1 /step]<br>0: A4 LEF, 1: LT LEF, 2: B5 LEF, 3: A5 LEF |
| 002 | TRAY 2: 1 | *ENG | [0 or 1 / **0 (EU/ASIA), 1 (NA)** / - ]<br>0: A4 LEF, 1: LT LEF |
| 003 | TRAY 2: 2 | *ENG | [0 or 1 / **0 (EU/ASIA), 1 (NA)** / - ]<br>0: A3, 1: DLT |
| 004 | TRAY 2: 3 | *ENG | [0 or 1 / **0 (EU/ASIA), 1 (NA)** / - ]<br>0: B4, 1: LG |

| | | | |
|---|---|---|---|
| 005 | TRAY 2: 4 | *ENG | [0 or 1 / **0 (EU/ASIA), 1 (NA)** / - ]<br>0: B5 LEF, 1: Exe LEF |
| 006 | TRAY 3/T-LCT: 1 | *ENG | [0 or 1 / **0 (EU/ASIA), 1 (NA)** / - ]<br>0: A4 LEF, 1: LT LEF |
| 007 | TRAY 3: 2 | *ENG | [0 or 1 / **0 (EU/ASIA), 1 (NA)** / - ]<br>0: A3, 1: DLT |
| 008 | TRAY 3: 3 | *ENG | [0 or 1 / **0 (EU/ASIA), 1 (NA)** / - ]<br>0: B4, 1: LG |
| 009 | TRAY 3: 4 | *ENG | [0 or 1 / **0 (EU/ASIA), 1 (NA)** / - ]<br>0: B5 LEF, 1: Exe LEF |
| 010 | TRAY 4: 1 | *ENG | [0 or 1 / **0 (EU/ASIA), 1 (NA)** / - ]<br>0: A4 LEF, 1: LT LEF |
| 011 | TRAY 4: 2 | *ENG | [0 or 1 / **0 (EU/ASIA), 1 (NA)** / - ]<br>0: A3, 1: DLT |
| 012 | TRAY 4: 3 | *ENG | [0 or 1 / **0 (EU/ASIA), 1 (NA)** / - ]<br>0: B4, 1: LG |
| 013 | TRAY 4: 4 | *ENG | [0 or 1 / **0 (EU/ASIA), 1 (NA)** / - ]<br>0: B5 LEF, 1: Exe LEF |
| 018 | LCT | *ENG | [0 to 2 / **0 (EU/ASIA), 1 (NA)** / - ]<br>0: A4LEF, 1: LTLEF, 2: B5LEF |

| | | | |
|---|---|---|---|
| **5186** | **[RK 4]** | | |
| | Enables or disables the prevention for RK4 (accounting device) disconnection. If the RK4 is disconnected for 10 seconds when this SP is set to "1 (Enable)", the machine automatically jams a sheet of paper and stops. | | |
| 001 | - | *ENG | [0 or 1 / **0** / 1/step]<br>0: Disable<br>1: Enable |

| | | | |
|---|---|---|---|
| **5188** | **[**Copy NV Version**]** | | |
| | Displays the version number of the NVRAM on the controller board. | | |
| 001 | - | - | - |

| | | | |
|---|---|---|---|
| **5191** | [Mode Set] **DFU** | | |
| 001 | - | - | - |

| | | | |
|---|---|---|---|
| **5193** | [External Controller Info. Settings] **DFU** | | |
| 001 | - | - | **0** OFF (Default) 1 On |

| | | | |
|---|---|---|---|
| **5195** | [Limitless SW DFU] **DFU** | | |
| 001 | - | - | - |

| | | | | |
|---|---|---|---|---|
| **5212** | **[Page Numbering]** | *CTL | | |
| | This program adjusts the position of the second side page numbers.<br>A "– value" moves the page number positions to the left edge. A "+ value" moves the page number positions to the right edge. | | | |
| 003 | Duplex Printout Right/Left Position | | | [–10 to 10 / **0** / 1 mm/step] |
| 004 | Duplex Printout High/Low Position | | | [–10 to 10 / **0** / 1 mm/step] |

| | | | |
|---|---|---|---|
| **5302** | **[Set Time]** | | |
| | Adjusts the RTC (real time clock) time setting for the local time zone.<br>Examples: For Japan (+9 GMT), enter 540 (9 hours x 60 min.)<br>DOM: +540 (Tokyo)<br>NA: -300 (New York)<br>EU: + 60 (Paris)<br>CH: +480 (Peking)<br>TW: +480 (Taipei)<br>AS: +480 (Hong Kong) | | |
| 002 | Time Difference | *CTL# | [-1440 to 1440 / **Area** / 1 min./step ] |

| | | | |
|---|---|---|---|
| **5307** | **[Summer Time]** | | |
| 001 | Setting | - | [ 0 to 1 / **NA, EU, ASIA** / 1 /step]<br>0: Disabled<br>1: Enabled<br>NA and EUR: 1, ASIA: 0 |
| | Enables or disables the summer time mode.<br>Note<br>▪ Make sure that both SP5-307-3 and -4 are correctly set. Otherwise, this SP is not activated even if this SP is set to "1". | | |
| 003 | Rule Set (Start) | - | |
| | Specifies the start setting for the summer time mode.<br>There are 8 digits in this SP. For months 1 to 9, the "0" cannot be input in the first digit, so the eight-digit setting for -2 or -3 becomes a seven-digit setting.<br>1st and 2nd digits: The month. [1 to 12]<br>3rd digit: The week of the month. [1 to 5]<br>4th digit: The day of the week. [0 to 6 = Sunday to Saturday]<br>5th and 6th digits: The hour. [00 to 23]<br>7th digit: The length of the advanced time. [0 to 9 / 1 hour /step]<br>8th digit: The length of the advanced time. [0 to 5 / 10 minutes /step]<br>For example: 3500010 (EU default)<br>The timer is advanced by 1 hour at am 0:00 on the 5th Sunday in March<br>▪ The digits are counted from the left.<br>▪ Make sure that SP5-307-1 is set to "1". | | |

| | | | |
|---|---|---|---|
| 004 | Rule Set (End) | - | - |
| | Specifies the end setting for the summer time mode.<br>There are 8 digits in this SP.<br>1st and 2nd digits: The month. [1 to 12]<br>3rd digit: The week of the month. [0 to 5]<br>4th digit: The day of the week. [0 to 7 = Sunday to Saturday]<br>5th and 6th digits: The hour. [00 to 23]<br>The 7th and 8 digits must be set to "00".<br>▪ The digits are counted from the left.<br>▪ Make sure that SP5-307-1 is set to "1". | | |

| | | | |
|---|---|---|---|
| **5401** | **[Access Control]** | | |
| | When installing the SDK application, SAS (VAS) adjusts the following settings. **DFU** | | |
| 103 | Default Document ACL | *CTL | Whenever a new login user is added to the address book in external certification mode (for Windows, LDAP, RDH), the default document ACL is updated according to this SP setting.<br>[0 to 3 / **0** / 1]<br>0: View<br>1: Edit<br>2: Edit/Delete<br>3: Full control<br>Note: This SP setting is ignored on a machine that is not using document server. |

| | | | |
|---|---|---|---|
| 200 | SDK1 Unique ID | *CTL | "SDK" is the "Software Development Kit". This data can be converted from SAS (VAS) when installed or uninstalled. **(DFU)** |
| 201 | SDK1 Certification Method | *CTL | |
| 210 | SDK2 Unique ID | *CTL | |
| 211 | SDK2 Certification Method | *CTL | |
| 220 | SDK3 Unique ID | *CTL | |
| 221 | SDK3 Certification Method | *CTL | |
| 230 | SDK certification device | | |

| **5404** | **[User Code Counter Clear]** | | |
|---|---|---|---|
| 001 | UCodeCtrClr | | Clears all counters for users. |

| **5411** | **[LDAP Certification]** | | |
|---|---|---|---|
| 004 | Easy Certification | *CTL | Determines whether easy LDAP certification is done.<br>[0 to 1/1/1] 1: On, 0: Off |
| 005 | Password Null Not Permit | *CTL | This SP is referenced only when SP5411-4 is set to "1" (On).<br>[0 to 1/0/1]<br>0: Password NULL not permitted.<br>1: Password NULL permitted. |

| **5501** | **[PM Alarm]** | *CTL | - |
|---|---|---|---|
| 001 | PM Alarm Level | [0 to 9999 / **0** / 1 /step]<br>0: Alarm off<br>1 to 9999: Alarm goes off when **Value (1 to 9999) x 1000** ≥ **PM counter** | |
| 002 | Original Count Alarm | [0 or 1 / **1** / – ]<br>0: No alarm sounds<br>1: Alarm sounds after the number of originals passing through the ARDF ≥ 10,000 | |

| 5413 | **[Lockout Setting]** | | |
|---|---|---|---|
| 001 | Lockout On/Off | *CTL | Switches on/off the lock on the local address book account.<br>[0 to 1/0/1]<br>0: Off, 1: On |
| 002 | Lockout Threshold | *CTL | Sets a limit on the frequency of lockouts for account lockouts.<br>[1 to 10/5/1] |
| 003 | Cancellation On/Off | *CTL | Determines whether the system waits the prescribed time for input of a correct user ID and password after an account lockout has occurred.<br>[0 to 1/0/1]<br>0: Off (no wait time, lockout not cancelled)<br>1: On (system waits, cancels lockout if correct user ID and password are entered. |

| | | | |
|---|---|---|---|
| 004 | Cancellation Time | *CTL | Determines the length of time that the system waits for correct input of the user ID and password after a lockout has occurred. This setting is used only if SP5413-3 is set to "1" (on).<br>[1 to 999/60/1 min.] |

| 5414 | **[Access Mitigation]** | | |
|---|---|---|---|
| 001 | Mitigation On/Off | *CTL | Switches on/off masking of continuously used IDs and passwords that are identical.<br>[0 to 1/0/1]<br>0: Off<br>1: On |
| 002 | Mitigation Time | *CTL | Sets the length of time for excluding continuous access for identical user IDs and passwords.<br>[0 to 60/15/1 min.] |

| 5415 | **[Password Attack]** | | |
|---|---|---|---|
| 001 | Permissible Number | *CTL | Sets the number of attempts to attack the system with random passwords to gain illegal access to the system.<br>[0 to 100/30/1 attempt] |
| 002 | Detect Time | *CTL | Sets the time limit to stop a password attack once such an attack has been detected.<br>[1 to 10/5/1 sec.] |

| 5416 | **[Access Information]** | | |
|---|---|---|---|
| 001 | Access User Max Number | *CTL | Limits the number of users used by the access exclusion and password attack detection functions.<br>[50 to 200/200/1 users] |
| 002 | Access Password Max Number | *CTL | Limits the number of passwords used by the access exclusion and password attack detection functions.<br>[50 to 200/200/1 passwords] |
| 003 | Monitor Interval | *CTL | Sets the processing time interval for referencing user ID and password information.<br>[1 to 10/3/1 sec.] |

| 5417 | **[Access Attack]** | | |
|---|---|---|---|
| 001 | Access Permissible Number | *CTL | Sets a limit on access attempts when an excessive number of attempts are detected for MFP features.<br>[0 to 500/100/1] |
| 002 | Attack Detect Time | *CTL | Sets the length of time for monitoring the frequency of access to MFP features.<br>[10 to 30/10/1 sec.] |
| 003 | Productivity Fall Waite | *CTL | Sets the wait time to slow down the speed of certification when an excessive number of access attempts have been detected.<br>[0 to 9/3/1 sec.] |

| | | | |
|---|---|---|---|
| 004 | Attack Max Number | *CTL | Sets a limit on the number of requests received for certification in order to slow down the certification speed when an excessive number of access attempts have been detected.<br>[50 to 200/200/1 attempt] |

| | | | |
|---|---|---|---|
| 5420 | **[User Authentication]** | | |
| | These settings should be done with the System Administrator.<br>**Note**: These functions are enabled only after the user access feature has been enabled. | | |
| 001 | Copy | *CTL | Determines whether certification is required before a user can use the copy applications.<br>[0 to 1 / **0** /1]<br>0: On, 1: Off |
| ⇒ 002 | Color Security Setting<br>**NOTE**: Enabling the SP Mode (Value=1) for Bit 4, diables the login dialog for that color. | *CTL | Bit0: Black& White Mode 1: Enable / 0: Disable **(0)**<br>**Bit3: Full Color Mode** 1: Enable / 0: Disable **(0)**<br>**Bit4: Auto Color Select Mode** 1: Enable / 0: Disable **(0)** |
| 011 | Document Server | *CTL | Determines whether certification is required before a user can use the document server.<br>[0 to 1 / **0** /1]<br>0: On, 1: Off |
| 021 | Fax | *CTL | Determines whether certification is required before a user can use the fax application.<br>[0 to 1 / **0** /1]<br>0: On, 1: Off |

⇒

| | | | |
|---|---|---|---|
| 031 | Scanner | *CTL | Determines whether certification is required before a user can use the scan applications.<br>[0 to 1 / **0** /1]<br>0: On, 1: Off |
| 041 | Printer | *CTL | Determines whether certification is required before a user can use the printer applications.<br>[0 to 1 / **0** / 1]<br>0: On, 1: Off |
| 051 | SDK1 | *CTL | [0 or 1 / **0** / 1] 0: ON. 1: OFF<br>Determines whether certification is required before a user can use the SDK application. |
| 061 | SDK2 | | |
| 071 | SDK3 | | |

| | | | |
|---|---|---|---|
| 5481 | **[Authentication Error Code]** | | |
| | These SP codes determine how the authentication failures are displayed. | | |
| 001 | System Log Disp | *CTL | Determines whether an error code appears in the system log after a user authentication failure occurs.<br>[0 to 1 / **0** / 1]<br>0: Off, 1: On |
| 002 | Panel Disp | *CTL | Determines whether an error code appears on the operation panel after a user authentication failure occurs.<br>[0 to 1 / **1** / 1]<br>1: On, 0: Off |

| | | | |
|---|---|---|---|
| 5490 | **[MF Key Card (Japan only)]** | | |
| 001 | - | *CTL | Sets up operation of the machine with a keycard.<br>[0 to 1 / **0** / 1]<br>0: Disabled. Cancels operation without a user code.<br>1: Enabled. Allows operation without a user code. |

| | | | |
|---|---|---|---|
| **5504** | **[Jam Alarm]** | *CTL | - |
| 001 | Sets the alarm to sound for the specified jam level (document misfeeds are not included).<br>[0 to 3 / **3** / 1 /step]<br>0: Zero (Off)<br>1: Low (2.5K jams)<br>2: Medium (3K jams)<br>3: High (6K jams) | | |

| | | | |
|---|---|---|---|
| **5505** | **[Error Alarm]** | | |
| | Sets the error alarm level.<br>The error alarm counter counts "1" when any SC is detected. However, the error alarm counter decreases by "1" when an SC is not detected during a set number of copied sheets (for example, default 1500 sheets).<br>The error alarm occurs when the SC error alarm counter reaches "5". | | |
| 001 | - | *CTL | [0 to 255 / **C2a; 35, C2b; 45** / 100 copies /step] |

| **5507** | **[Supply Alarm]** | *CTL | - |
|---|---|---|---|
| 001 | Paper Supply Alarm | **0**: Off, 1: On, **DFU** | |
| 002 | Staple Supply Alarm | **0**: Off, 1: On, **Japan only** | |
| 003 | Toner Supply Alarm | **0**: Off, 1: On, **DFU** | |
| 080 | Toner Call Timing | Changes the timing of the “Toner Supply Call” via the @Remote, when the following conditions occur.<br>0: Toner is replaced<br>1: Toner near end or End | |
| 128 | Interval :Others | [250 to 10000 / **1000** / 1 /step] **DFU** | |
| 132 | Interval :A3 | | |
| 133 | Interval :A4 | | |
| 134 | Interval :A5 | | |
| 141 | Interval :B4 | | |
| 142 | Interval :B5 | | |
| 160 | Interval :DLT | | |
| 164 | Interval :LG | | |
| 166 | Interval :LT | | |
| 172 | Interval :HLT | | |

| **5508*** | **[CC Call]** | *CTL | - |
|---|---|---|---|
| 001* | Jam Remains | | 0: Disable, **1**: Enable |
| | Enables/disables initiating a call for an unattended paper jam. | | |
| 002* | Continuous Jams | | 0: Disable, **1**: Enable |
| | Enables/disables initiating a call for consecutive paper jams. | | |
| 003* | Continuous Door Open | | 0: Disable, **1**: Enable |
| | Enables/disables initiating a call when the front door remains open. | | |
| 011* | Jam Detection: Time Length | | [3 to 30 / **10** / 1 minute /step] |
| | Sets the time a jam must remain before it becomes an “unattended paper jam”. This setting is enabled only when SP5508-004 is set to "1". | | |
| 012* | Jam Detection: Continuous Count | | [2 to 10 / **5** / 1 /step] |
| | Sets the number of consecutive paper jams required to initiate a call. This setting is enabled only when SP5508-004 is set to "1". | | |
| 013* | Door Open: Time Length | | [3 to 30 / **10** / 1 /step] |
| | Sets the length of time the door remains open before the machine initiates a call.<br>This setting is enabled only when SP5-508-004 is set to "1". | | |

| | | | |
|---|---|---|---|
| **5515** | **[SC/Alarm Setting]** | *CTL | - |
| | With NRS (New Remote Service) in use, these SP codes can be set to issue an SC call when an SC error occurs. If this SP is switched off, the SC call is not issued when an SC error occurs. | | |
| 001 | SC Call | | [0 or 1 / **1** / - ]<br>0: Off<br>1: On |
| 002 | Service Parts Near End Call | | |
| 003 | Service Parts End Call | | |
| 004 | User Call | | |
| 006 | Communication Test Call | | [0 or 1 / **1** / - ]<br>0: Off<br>1: On |
| 007 | Machine Information Notice | | |
| 008 | Alarm Notice | | |
| 009 | Non Genuine Toner Alarm | | |
| 010 | Supply Automatic Ordering Call | | |
| 011 | Supply Management Report Call | | |
| 012 | Jam/Door Open Call | | |

| | | | |
|---|---|---|---|
| **5516** | **[Individual PM Part Alarm Call]** | *CTL | - |
| 001 | Disable/ Enable Setting | Enables or disables the PM part alarm call.<br>[0 or 1 / **1** / - ]<br>0: Not Send, 1: Send | |

| 5610 | [Base Gamma Control Point: Command] | | |
|---|---|---|---|
| 004 | Factory Setting | - | - |
| | Recalls the factory settings. | | |
| 005 | Restore | - | - |
| | Overwrites the current values onto the factory settings. | | |
| 006 | Restore | - | - |
| | Recalls the previous settings. | | |

| 5611 | [Toner Color in 2C] | | |
|---|---|---|---|
| 001 | B-C | *ENG | [0 to 128 / **100** / 1 /step]<br>128: Darkest density |
| | Adjusts the Cyan correction value of the blue signal in two-color mode. | | |
| 002 | B-M | *ENG | [0 to 128 / **100** / 1 /step]<br>128: Darkest density |
| | Adjusts the Magenta correction value of the blue signal in two-color mode. | | |
| 003 | G-C | *ENG | [0 to 128 / **100** / 1 /step]<br>128: Darkest density |
| | Adjusts the Cyan correction value of the blue signal in two-color mode. | | |
| 004 | G-Y | *ENG | [0 to 128 / **100** / 1 /step]<br>128: Darkest density |
| | Adjusts the Yellow correction value of the blue signal in two-color mode. | | |

| | | | |
|---|---|---|---|
| 005 | R-M | *ENG | [0 to 128 / **100** / 1 /step]<br>128: Darkest density |
| | Adjusts the Magenta correction value of the blue signal in two-color mode. | | |
| 006 | R-Y | *ENG | [0 to 128 / **100** / 1 /step]<br>128: Darkest density |
| | Adjusts the Yellow correction value of the blue signal in two-color mode. | | |

| **5618** | **[Color Mode Display Selection]** | | |
|---|---|---|---|
| 001 | - | *CTL | [0 or 1 / **1** / - ]<br>0: ACS, Colour, Black & White, Two Colour, Single colour<br>1: ACD, Full Colour, Black & White |
| | Selects the color selection display on the LCD. | | |

Note

- Memory Clear (SP5-801)
- The following tables list the items that are cleared. The serial number information, meter charge setting and meter charge counters (SP8-581, 582, 583, 584, and 586) are not cleared.

| 5801 | **[Memory Clear]** | |
|---|---|---|
| 001 | All Clear | Resets all correction data for process control and all software counters, and returns all modes and adjustments to their default values. |
| 002 | ENG All | Clears the engine settings. |
| 003 | SCS | Initializes default system settings, SCS (System Control Service) settings, operation display coordinates, and ROM update information. |
| 006 | Copier application | Initializes all copier application settings. |
| 007 | Fax application | Initializes the fax reset time, job login ID, all TX/RX settings, local storage file numbers, and off-hook timer. |
| 008 | Printer application | The following service settings:<br>▪ Bit switches<br>▪ Gamma settings (User & Service)<br>▪ Toner Limit<br>The following user settings:<br>▪ Tray Priority<br>▪ Menu Protect<br>▪ System Setting except for setting of Energy Saver<br>▪ I/F Setup (I/O Buffer and I/O Timeout)<br>▪ PCL Menu |
| 009 | Scanner application | Initializes the scanner defaults for the scanner and all the scanner SP modes. |
| 010 | Netfile application | Deletes the network file application management files and thumbnails, and initializes the job login ID. |

| | | |
|---|---|---|
| 011 | NCS | All setting of Network Setup (User Menu)<br>(NCS: Network Control Service) |
| 012 | R-Fax | Initializes the job login ID, SmartDeviceMonitor for Admin, job history, and local storage file numbers. |
| 014 | Clear DCS Settings | Initializes the DCS (Delivery Control Service) settings. |
| 015 | Clear UCS Settings | Initializes the UCS (User Information Control Service) settings. |
| 016 | MIRS Setting | Initializes the MIRS (Machine Information Report Service) settings. |
| 017 | CCS | Initializes the CCS (Certification and Charge-control Service) settings. |
| 018 | SRM Memory Check | Initializes the SRM (System Resource Manager) settings. |
| 020 | Web Uapli | Initializes the web user application settings. |
| 021 | ECS | Initializes the ECS settings. |

| | | | |
|---|---|---|---|
| **5802** | **[Free Run]** | | |
| | Performs a free run on the copier engine.<br>Note<br>▪ The machine starts free run in the same condition as the sequence of A4/LT, A3 or A4 SEF printing from the 1st or 2nd tray. Therefore, the correct paper should be loaded in the 1st tray or 2nd tray, but paper is not fed.<br>▪ The main switch has to be turned off and on after using the free run mode for a test. | | |
| 001 | TRAY1: A4LEF: FC | - | - |
| 002 | TRAY2: A3: FC | - | |
| 003 | TRAY2: A4SEF: FC | - | |

| | | | |
|---|---|---|---|
| **5803** | **[Input Check]** | - | See "Input Check Table" in this section. |
| **5804** | **[Output Check]** | - | See "Output Check Table" in this section. |

| | | | |
|---|---|---|---|
| **5805** | **[Anti-Condensation Heater]** | | |
| 002 | 0:OFF / 1:ON | *ENG | [0 or 1 / **0** / -] |

| | | | |
|---|---|---|---|
| **5810** | **[SC Reset]** | | |
| | Resets a type A service call condition.<br>Note<br>▪ Turn the main switch off and on after resetting the SC code. | | |
| 001 | Fusing SC Reset | - | - |

| **5811** | **[Machine Serial]** Machine Serial Number Display | | |
|---|---|---|---|
| 001 | Set | *ENG | Sets the machine serial number. |
| 002 | Display | | Displays the machine serial number. |
| 004 | Set:BICU | | Same as SP5-811-001 |

| **5812** | **[Service Tel. No. Setting]** | | |
|---|---|---|---|
| 001 | Service | *CTL | - |
| | Sets the telephone number for a service representative. This number is printed on the Counter List, which can be printed with the user's "Counter" menu.<br>This can be up to 20 characters (both numbers and alphabetic characters can be input). | | |
| 002 | Facsimile | *CTL | - |
| | Sets the fax or telephone number for a service representative. This number is printed on the Counter List.<br>This can be up to 20 characters (both numbers and alphabetic characters can be input). | | |
| 003 | Supply | *CTL | - |
| | Use this to input the telephone number of your supplier for consumables. Enter the number and press #. | | |
| 004 | Operation | *CTL | - |
| | Use this to input the telephone number of your sales agency. Enter the number and press #. | | |

| **5816** | **[Remote Service]** | *CTL | **-** |
|---|---|---|---|
| 001 | I/F Setting | | |
| | Selects the remote service setting.<br>[0 to 2 / **2** / 1 /step]<br>0: Remote service off<br>1: CSS remote service on<br>2: @Remote service on | | |
| 002 | CE Call | | |
| | Performs the CE Call at the start or end of the service.<br>[0 or 1 / **0** / 1 /step]<br>0: Start of the service<br>1: End of the service<br>**NOTE:** This SP is activated only when SP 5816-001 is set to “2”. | | |
| 003 | Function Flag | | |
| | Enables or disables the remote service function.<br>[0 to 1 / **0** / 1 /step]<br>0: Disabled<br>1: Enabled | | |
| 006 | Device Information Call Display Setting | | |
| | Displays or does not display the device information call content.<br>[0 to 1 / **0** / 1 /step]<br>0: Not displayed<br>1: Displayed | | |
| 007 | SSL Disable | | |
| | Uses or does not use the RCG certification by SSL when calling the RCG.<br>[0 to 1 / **0** / 1 /step]<br>0: Uses the RCG certification<br>1: Does no use the RCG certification | | |

| | | |
|---|---|---|
| 008 | RCG Connect Timeout | |
| | Specifies the connect timeout interval when calling the RCG.<br>[1 to 90 / **10** / 1 second /step] | |
| 009 | RCG Write Timeout | |
| | Specifies the write timeout interval when calling the RCG.<br>[1 to 100 / **60** / 1 second /step] | |
| 010 | RCG Read Timeout | |
| | Specifies the read timeout interval when calling the RCG.<br>[1 to 100 / **60** / 1 second /step] | |
| 011 | Port 80 Enable | - |
| | Enables/disables access via port 80 to the SOAP method.<br>[0 or 1 / **0** / – ]<br>0: Disabled<br>1: Enabled | |
| 021 | RCG – C Registed | |
| | This SP displays the Cumin installation end flag.<br>0: Installation not completed<br>1: Installation completed | |
| 022 | RCG – C Registed Detail | |
| | This SP displays the Cumin installation status.<br>0: Basil not registered<br>1: Basil registered<br>2: Device registered | |
| 023 | Connect Type (N/M) | |
| | This SP displays and selects the Cumin connection method.<br>[0 or 1 / **0** / 1 /step<br>0: Internet connection<br>1: Dial-up connection | |

| | | |
|---|---|---|
| 061 | Cert. Expire Timing **DFU** | Proximity of the expiration of the certification. |
| 062 | Use Proxy | This SP setting determines if the proxy server is used when the machine communicates with the service center. |
| 063 | Proxy Host | |
| | This SP sets the address of the proxy server used for communication between Cumin-N and the gateway. Use this SP to set up or display the customer proxy server address. The address is necessary to set up Cumin-N.<br>Note<br>▪ The address display is limited to 128 characters. Characters beyond the 128 character are ignored.<br>▪ This address is customer information and is not printed in the SMC report. | |
| 064 | Proxy Port Number | |
| | This SP sets the port number of the proxy server used for communication between Cumin-N and the gateway. This setting is necessary to set up Cumin-N.<br>Note<br>▪ This port number is customer information and is not printed in the SMC report. | |
| 065 | Proxy User Name | |
| | This SP sets the HTTP proxy certification user name.<br>Note<br>▪ The length of the name is limited to 31 characters. Any character beyond the 31st character is ignored.<br>▪ This name is customer information and is not printed in the SMC report. | |

| | | |
|---|---|---|
| 066 | Proxy Password | |
| | This SP sets the HTTP proxy certification password.<br>Note<br>▪ The length of the password is limited to 31 characters. Any character beyond the 31st character is ignored.<br>▪ This name is customer information and is not printed in the SMC report. | |
| 067 | CERT: Up State | |
| | Displays the status of the certification update. | |
| | 0 | The certification used by Cumin is set correctly. |
| | 1 | The certification request (setAuthKey) for update has been received from the GW URL and certification is presently being updated. |
| | 2 | The certification update is completed and the GW URL is being notified of the successful update. |
| | 3 | The certification update failed, and the GW URL is being notified of the failed update. |
| | 4 | The period of the certification has expired and new request for an update is being sent to the GW URL. |
| | 11 | A rescue update for certification has been issued and a rescue certification setting is in progress for the rescue GW connection. |
| | 12 | The rescue certification setting is completed and the GW URL is being notified of the certification update request. |
| | 13 | The notification of the request for certification update has completed successfully, and the system is waiting for the certification update request from the rescue GW URL. |
| | 14 | The notification of the certification request has been received from the rescue GW controller, and the certification is being stored. |

| | | |
|---|---|---|
| | 15 | The certification has been stored, and the GW URL is being notified of the successful completion of this event. |
| | 16 | The storing of the certification has failed, and the GW URL is being notified of the failure of this event. |
| | 17 | The certification update request has been received from the GW URL, the GW URL was notified of the results of the update after it was completed, but an certification error has been received, and the rescue certification is being recorded. |
| | 18 | The rescue certification of No. 17 has been recorded, and the GW URL is being notified of the failure of the certification update. |
| 068 | CERT: Error | |
| | Displays a number code that describes the reason for the request for update of the certification. | |
| | 0 | Normal. There is no request for certification update in progress. |
| | 1 | Request for certification update in progress. The current certification has expired. |
| | 2 | An SSL error notification has been issued. Issued after the certification has expired. |
| | 3 | Notification of shift from a common authentication to an individual certification. |
| | 4 | Notification of a common certification without ID2. |
| | 5 | Notification that no certification was issued. |
| | 6 | Notification that GW URL does not exist. |
| 069 | CERT: Up ID | The ID of the request for certification. |
| 083 | Firmware Up Status | Displays the status of the firmware update. |

| | | |
|---|---|---|
| 084 | Non-HDD Firm Up | This setting determines if the firmware can be updated, even without the HDD installed.<br>0: Not allowed update<br>1: Allowed update |
| 085 | Firm Up User Check | This SP setting determines if the operator can confirm the previous version of the firmware before the firmware update execution. If the option to confirm the previous version is selected, a notification is sent to the system manager and the firmware update is done with the firmware files from the URL. |
| 086 | Firmware Size | Allows the service technician to confirm the size of the firmware data files during the firmware update execution. |
| 087 | CERT: Macro Version | Displays the macro version of the NRS certification. |
| 088 | CERT: PAC Version | Displays the PAC version of the NRS certification. |
| 089 | CERT: ID2 Code | Displays ID2 for the NRS certification. Spaces are displayed as underscores (_). Asteriskes () indicate that no NRS certification exists. |
| 090 | CERT: Subject | Displays the common name of the NRS certification subject. CN = the following 17 bytes. Spaces are displayed as underscores (_). Asterisks () indicate that no DESS exists. |
| 091 | CERT: Serial Number | Displays serial number for the NRS certification. Asterisks () indicate that no DESS exists. |
| 092 | CERT: Issuer | Displays the common name of the issuer of the NRS certification. CN = the following 30 bytes. Asteriskes () indicate that no DESS exists. |

| | | |
|---|---|---|
| 093 | CERT: Valid Start | Displays the start time of the period for which the current NRS certification is enabled. |
| 094 | CERT: Valid End | Displays the end time of the period for which the current NRS certification is enabled. |
| 150 | Selection Country | |
| | Select from the list the name of the country where Cumin-M is installed in the machine. After selecting the country, you must also set the following SP codes for Cumin-M:<br>▪ SP5816-153<br>▪ SP5816-154<br>▪ SP5816-161<br>0: Japan, 1: USA, 2: Canada, 3: UK, 4: Germany, 5: France, 6: Italy, 7: Netherlands, 8: Belgium, 9: Luxembourg, 10: Spain | |
| 151 | Line Type Authentication Judgment | |
| | Touch [Execute].<br>Setting this SP classifies the telephone line where Cumin-M is connected as either dial-up or push type, so Cumin-M can automatically distinguish the number that connects to the outside line.<br>▪ The current progress, success, or failure of this execution can be displayed with SP5816-152.<br>▪ If the execution succeeded, SP5816-153 will display the result for confirmation and SP5816-154 will display the telephone number for the connection to the outside line. | |

| | |
|---|---|
| 152 | Line Type Judgment Result |
| | Displays a number to show the result of the execution of SP5816 151. Here is a list of what the numbers mean.<br>0: Success<br>1: In progress (no result yet). Please wait.<br>2: Line abnormal<br>3: Cannot detect dial tone automatically<br>4: Line is disconnected<br>5: Insufficient electrical power supply<br>6: Line classification not supported<br>7: Error because fax transmission in progress – ioctl() occurred.<br>8: Other error occurred<br>9: Line classification still in progress. Please wait. |
| 153 | Selection Dial/Push |
| | This SP displays the classification (tone or pulse) of the telephone line to the access point for Cumin-M. The numbered displayed (0 or 1) is the result of the execution of SP5816 151. However, this setting can also be changed manually.<br>[0 to 1/ **0** / 1 /step]<br>0: Tone Dialing Phone<br>1: Pulse Dialing Phone<br>Inside Japan "2" may also be displayed:<br>0: Tone Dialing Phone<br>1: Pulse Dialing Phone 10PPS<br>2: Pulse Dialing Phone 20PPS |

| | |
|---|---|
| 154 | Outside Line/Outgoing Number |
| | The SP sets the number that switches to PSTN for the outside connection for Cumin-M in a system that employs a PBX (internal line).<br>▪ If the execution of SP5816 151 has succeeded and Cumin-M has connected to the **external** line, this SP display is completely blank.<br>▪ If Cumin-M has connected to an **internal** line, then the number of the connection to the external line is displayed.<br>▪ If Cumin-M has connected to an external line, a comma is displayed with the number. The comma is inserted for a 2 sec. pause.<br>▪ The number setting for the external line can be entered manually (including commas). |
| 156 | Dial Up User Name |
| | Use this SP to set a user name for access to remote dial up. Follow these rules when setting a user name:<br>▪ Name length: Up to 32 characters<br>▪ Spaces and # allowed but the entire entry must be enclosed by double quotation marks (''). |
| 157 | Dial Up Password |
| | Use this SP to set a password for access to remote dial up. Follow these rules when setting a user name:<br>▪ Name length: Up to 32 characters<br>▪ Spaces and # allowed but the entire entry must be enclosed by double quotation marks (''). |
| 161 | Local Phone Number |
| | Use this SP to set the telephone number of the line where Cumin-M is connected. This number is transmitted to and used by the Call Center to return calls.<br>Limit: 24 numbers (numbers only) |

| | | |
|---|---|---|
| 162 | Connection Timing Adjustment: Incoming | |
| | When the Call Center calls out to a Cumin-M modem, it sends a repeating ID tone (*#1#). This SP sets the line remains open to send these ID tones after the number of the Cumin-M modem is dialed up and connected.<br>[0 to 24 / **1** / 1 /step]<br>The actual amount of time is this setting x 2 sec. For example, if you set "2" the line will remain open for 4 sec. | |
| 163 | Access Point | |
| | This is the number of the dial-up access point for Cumin-M. If no setting is done for this SP code, then a preset value (determined by the country selected) is used.<br>Default: 0<br>Allowed: Up to 16 alphanumeric characters | |
| 164 | Line Connecting | |
| | This SP sets the connection conditions for the customer. This setting dedicates the line to Cumin-M only, or sets the line for sharing between Cumin-M and a fax unit.<br>[0 to 1 / **0** / 1 /step]<br>0: Sharing Fax<br>1: No Sharing Fax<br>Note<br>▪ If this setting is changed, the copier must be cycled off and on.<br>▪ SP5816 187 determines whether the off-hook button can be used to interrupt a Cumin-M transmission in progress to open the line for fax transaction. | |
| 173 | Modem Serial Number | This SP displays the serial number registered for the Cumin-M. |

| | | | |
|---|---|---|---|
| 174 | Retransmission Limit | | |
| | Normally, it is best to allow unlimited time for certification and ID2 update requests, and for the notification that the certification has been completed. However, Cumin-M generates charges based on transmission time for the customer, so a limit is placed upon the time allowed for these transactions.<br>If these transactions cannot be completed within the allowed time, do this SP to cancel the time restriction. | | |
| 187 | FAX TX Priority | - | |
| | This SP determines whether pushing the off-hook button will interrupt a Cumin-M transmission in progress to open the line for fax transaction. This SP can be used only if SP5816 164 is set to "0".<br>[0 or 1/ **0** / - ]<br>0: Disable, 1: Enable | | |
| 200 | Manual Polling | - | Executes the manual polling. |
| 201 | Regist: Status | | |
| | Displays a number that indicates the status of the NRS service device.<br>0: Neither the NRS device nor Cumin device are set.<br>1: The Cumin device is being set. Only Box registration is completed. In this status the Basil unit cannot answer a polling request.<br>2: The Cumin device is set. In this status the Basil unit cannot answer a polling request.<br>3: The NRS device is being set. In this status the Cumin device cannot be set.<br>4: The NRS module has not started. | | |
| 202 | Letter Number | Allows entry of the number of the request needed for the Cumin device. | |
| 203 | Confirm Execute | Executes the inquiry request to the NRS GW URL. | |

| | | |
|---|---|---|
| 204 | Confirm Result | |
| | Displays a number that indicates the result of the inquiry executed with SP5816 203.<br>0: Succeeded<br>1: Inquiry number error<br>2: Registration in progress<br>3: Proxy error (proxy enabled)<br>4: Proxy error (proxy disabled)<br>5: Proxy error (Illegal user name or password)<br>6: Communication error<br>7: Certification update error<br>8: Other error<br>9: Inquiry executing | |
| 205 | Confirm Place | |
| | Displays the result of the notification sent to the device from the GW URL in answer to the inquiry request. Displayed only when the result is registered at the GW URL. | |
| 206 | Register Execute | Executes Cumin Registration. |
| 207 | Register Result | |
| | Displays a number that indicates the registration result.<br>0: Succeeded<br>2: Registration in progress<br>3: Proxy error (proxy enabled)<br>4: Proxy error (proxy disabled)<br>5: Proxy error (Illegal user name or password)<br>6: Communication error<br>7: Certification update error<br>8: Other error<br>9: Registration executing | |

| | | | |
|---|---|---|---|
| 208 | Error Code | | |
| | Displays a number that describes the error code that was issued when either SP5816-204 or SP5816-207 was executed. | | |
| | **Cause** | **Code** | **Meaning** |
| | Illegal Modem Parameter | -11001 | Chat parameter error |
| | | -11002 | Chat execution error |
| | | -11003 | Unexpected error |
| | Operation Error, Incorrect Setting | -12002 | Inquiry, registration attempted without acquiring device status. |
| | | -12003 | Attempted registration without execution of an inquiry and no previous registration. |
| | | -12004 | Attempted setting with illegal entries for certification and ID2. |
| | Error Caused by Response from GW URL | -2385 | Attempted dial up overseas without the correct international prefix for the telephone number. |
| | | -2387 | Not supported at the Service Center |
| | | -2389 | Database out of service |
| | | -2390 | Program out of service |
| | | -2391 | Two registrations for same device |
| | | -2392 | Parameter error |
| | | -2393 | Basil not managed |
| | | -2394 | Device not managed |

| | | | |
|---|---|---|---|
| | | -2395 | Box ID for Basil is illegal |
| | | -2396 | Device ID for Basil is illegal |
| | | -2397 | Incorrect ID2 format |
| | | -2398 | Incorrect request number format |
| 209 | @Remote Setting Clear | Releases the machine from its Cumin setup. | |
| 250 | CommLog Print | Prints the communication log. | |

| | | | |
|---|---|---|---|
| **5821** | **[Remote Service Address]** | | |
| 002 | RCG IP Address | *CTL | Sets the IP address of the RCG (Remote Communication Gate) destination for call processing at the remote service center. |

| | | | |
|---|---|---|---|
| **5824** | **[NV-RAM Data Upload]** | | |
| | Uploads the UP and SP mode data (except for counters and the serial number) from the NVRAM to an SD card. For details, see the "NVRAM Data Upload/Download" in the “System Maintenance Reference” of the Field Service Manual. | | |
| 001 | NV-RAM Data Upload | # | - |

| | | | |
|---|---|---|---|
| **5825** | **[NV-RAM Data Download]** | | |
| | Downloads the UP and SP mode data from an SD card to the NVRAM. For details, see the "NVRAM Data Upload/Download" in the “System Maintenance Reference” of the Field Service Manual. | | |
| 001 | NV-RAM Download | # | - |

| **5828** | **[Network Setting]** | *CTL | **-** |
|---|---|---|---|
| 050 | 1284 Compatibility (Centro) | Enables or disables 1284 Compatibility.<br>[0 or 1 / **1** / 1 / step]<br>0: Disabled, 1: Enabled | |
| 052 | ECP (Centro) | Enables or disables ECP Compatibility.<br>[0 or 1 / **1** / 1 / step]<br>0: Disabled, 1: Enabled<br>Note<br>▪ This SP is activated only when SP5-828-50 is set to "1". | |
| 065 | Job Spooling | Enables/disables Job Spooling.<br>[0 or 1 / **0** / 1 / step]<br>0: Disabled, 1: Enabled | |
| 066 | Job Spooling Clear: Start Time | Treatment of the job when a spooled job exists at power on.<br>0: ON (Data is cleared)<br>**1**: OFF (Automatically printed) | |
| 069 | Job Spooling (Protocol) | Validates or invalidates the job spooling function for each protocol.<br>**0**: Validates<br>1: Invalidates<br>bit0: LPR<br>bit1: FTP<br>bit2: IPP<br>bit3: SMB<br>bit4: BMLinkS<br>bit5: DIPRINT<br>bit6: sftp<br>bit7: (Reserved) | |

| | | |
|---|---|---|
| 090 | TELNET (0: OFF 1: ON) | Enables or disables the Telnet protocol.<br>[0 or 1 / **1** / – ]<br>0: Disable, 1: Enable |
| 091 | Web (0: OFF 1: ON) | Enables or disables the Web operation.<br>[0 or 1 / **1** / – ]<br>0: Disable, 1: Enable |
| 145 | Active IPv6 Link Local Address | This is the IPv6 local address link referenced on the Ethernet or wireless LAN (802.11b) in the format:<br>"Link Local Address" + "Prefix Length"<br>The IPv6 address consists of a total 128 bits configured in 8 blocks of 16 bits each. |
| 147 | Active IPv6 Stateless Address 1 | These SPs are the IPv6 status addresses (1 to 5) referenced on the Ethernet or wireless LAN (802.11b) in the format:<br>"Status Address" + "Prefix Length"<br>The IPv6 address consists of a total 128 bits configured in 8 blocks of 16 bits each. |
| 149 | Active IPv6 Stateless Address 2 | |
| 151 | Active IPv6 Stateless Address 3 | |
| 153 | Active IPv6 Stateless Address 4 | |
| 155 | Active IPv6 Stateless Address 5 | |
| 156 | IPv6 Manual Address | This SP is the IPv6 manually set address referenced on the Ethernet or wireless LAN (802.11b) in the format:<br>"Manual Set Address" + "Prefix Length"<br>The IPv6 address consists of a total 128 bits configured in 8 blocks of 16 bits each. |

| | | |
|---|---|---|
| 158 | IPv6 Gateway Address | This SP is the IPv6 gateway address referenced on the Ethernet or wireless LAN (802.11b). The IPv6 address consists of a total 128 bits configured in 8 blocks of 16 bits each. |
| 160 | Action Mode (IPv6) | |
| 161 | IPv6 Stateless Auto Setting | Enables or disables the automatic setting for IPv6 stateless.<br>[0 or 1 / **1** / 1 /step]<br>0: Disable, 1: Enable |
| 236 | Web Item visible | Displays or does not display the Web system items.<br>[0 x 0000 to 0 x ffff / **0 x ffff**] 0: Not displayed, 1: Displayed<br>bit0: Net RICOH<br>bit1: Consumable Supplier<br>bit2-15: Reserved (all) |
| 237 | Web shopping link visible | Displays or does not display the link to Net RICOH on the top page and link page of the web system.<br>[0 to 1 / **1** / 1]<br>0: Not display, 1:Display |
| 238 | Web supplies Link visible | Displays or does not display the link to Consumable Supplier on the top page and link page of the web system.<br>[0 to 1 / **1** / 1]<br>0: Not display, 1:Display |
| 239 | Web Link1 Name | This SP confirms or changes the URL1 name on the link page of the web system. The maximum characters for the URL name are 31 characters. |

| | | |
|---|---|---|
| 240 | Web URL | This SP confirms or changes the link to URL1 on the link page of the web system. The maximum characters for the URL are 127 characters. |
| 241 | Web visible | Displays or does not display the link to URL1 on the top page of the web system.<br>[0 to 1 / **1** / 1]<br>0: Not display, 1:Display |
| 242 | Web Link2 Name | Same as "-239" |
| 243 | Web Link2 URL | Same as "-240" |
| 244 | Web Link2 visible | Same as "-241" |

| **5832** | **[HDD]** HDD Initialization | *CTL | **-** |
|---|---|---|---|
| 001 | HDD Formatting (ALL) | Initializes the hard disk. Use this SP mode only if there is a hard disk error. | |
| 002 | HDD Formatting (IMH) | | |
| 003 | HDD Formatting (Thumbnail) | | |
| 004 | HDD Formatting (Job Log) | | |
| 005 | HDD Formatting (Printer Fonts) | | |
| 006 | HDD Formatting (User Info) | | |
| 007 | Mail RX Data | | |
| 008 | Mail TX Data | | |
| 009 | HDD Formatting (Data for a Design) | | |
| 010 | HDD Formatting (Log) | | |
| 011 | HDD Formatting (Ridoc I/F) | | |

| | | | | |
|---|---|---|---|---|
| **5836** | **[Capture Settings]** | *CTL | - | |
| 001 | Capture Function (0:Off 1:On) | | **0**: Disable, 1: Enable | |
| | With this function disabled, the settings related to the capture feature cannot be initialized, displayed, or selected. | | | |
| 002 | Panel Setting | | **0**: Displayed, 1: Not displayed | |
| | Displays or does not display the capture function buttons. | | | |
| | **5836-71 to 5836-78, Copier and Printer Document Reduction**<br>The following 6 SP modes set the default reduction for stored documents sent to the document management server via the MLB.<br>Enabled only when optional MLB (Media Link Board) is installed. | | | |
| 071 | Reduction for Copy Color | | 0: 1to-1, 1: 1/2, **2: 1/3**, 3: 1/4 | |
| 072 | Reduction for Copy B&W Text | | **0: 1to-1**, 1: 1/2, 2: 1/3, 3: 1/4 | |
| 073 | Reduction for Copy B&W Other | | **0: 1to-1**, 1: 1/2, 2: 1/3, 3: 1/4 | |
| 074 | Reduction for Printer Color | | 0: 1to-1, 1: 1/2, **2: 1/3**, 3: 1/4 | |
| 075 | Reduction for Printer B&W | | **0: 1to-1**, 1: 1/2, 2: 1/3, 3: 1/4 | |
| 076 | Reduction for Printer B&W HQ | | **0: 1to-1**, 1: 1/2, 2: 1/3, 3: 1/4 | |
| 077 | Reduction for Printer Color 1200 | | 1: 1/2, 3: 1/4, **4: 1/6**, 5: 1/8 (2: skipped) | |

| | | |
|---|---|---|
| 078 | Reduction for Printer B&W 1200 | **1: 1/2**, 3: 1/4, 4: 1/6, 5: 1/8 (2: skipped) |
| | **5836-81 to 5836-86, Stored document format**<br>The following 6 SP modes set Sets the default format for stored documents sent to the document management server via the MLB.<br>Enabled only when optional MLB (Media Link Board) is installed. | |
| 081 | Format for Copy Color | **0: JFIF/JPEG**, 1: TIFF/MMR,<br>2: TIFF/MH, 3: TIFF/MR<br>Note<br>▪ This SP is not used in this model. |
| 082 | Format for Copy B&W Text | 0: JFIF/JPEG, **1: TIFF/MMR**,<br>2: TIFF/MH, 3: TIFF/MR |
| 083 | Format Copy B&W Other | 0: JFIF/JPEG, **1: TIFF/MMR**,<br>2: TIFF/MH, 3: TIFF/MR |
| 084 | Format for Printer Color | **0: JFIF/JPEG**, 1: TIFF/MMR,<br>2: TIFF/MH, 3: TIFF/MR<br>Note<br>▪ This SP is not used in this model. |
| 085 | Format for Printer B&W | 0: JFIF/JPEG, **1: TIFF/MMR**,<br>2: TIFF/MH, 3: TIFF/MR |
| 086 | Format for Printer B&W HQ | 0: JFIF/JPEG, 1: TIFF/MMR,<br>**2: TIFF/MH**, 3: TIFF/MR |
| 091 | Default for JPEG | [5 to 95 / **50** / 1 /step] |
| | Sets the JPEG format default for documents sent to the document management server via the MLB with JPEG selected as the format.<br>Enabled only when optional MLB (Media Link Board) is installed. | |

| | | | | |
|---|---|---|---|---|
| 101 | Primary srv IP address | Sets the IP address for the primary capture server. This is basically adjusted by the remote system. | | |
| 102 | Primary srv scheme | This is basically adjusted by the remote system. | | |
| 103 | Primary srv port number | This is basically adjusted by the remote system. | | |
| 104 | Primary srv URL path | This is basically adjusted by the remote system. | | |
| 111 | Secondary srv IP address | Sets the IP address for the secondary capture server. This is basically adjusted by the remote system. | | |
| 112 | Secondary srv scheme | This is basically adjusted by the remote system. | | |
| 113 | Secondary srv port number | This is basically adjusted by the remote system. | | |
| 114 | Secondary srv URL path | This is basically adjusted by the remote system. | | |
| 120 | Default Reso Rate Switch | This is basically adjusted by the remote system. | | |
| 121 | Reso: Copy (Color) | [0 to 3 / **2** / 1/step] | | |
| | Selects the resolution for color copy mode. This is basically adjusted by the remote system.<br>0: 600dpi/ 1: 300dpi/ 2: 150dpi/ 3: 75dpi | | | |
| 122 | Reso: Copy (Mono) | [0 to 5 / **3** / 1/step] | | |
| | Selects the resolution for BW copy mode. This is basically adjusted by the remote system.<br>0: 600dpi/ 1: 400dpi/ 2: 300dpi/ 3: 200dpi/ 4: 150dpi/ 5: 100dpi | | | |

| | | | | |
|---|---|---|---|---|
| 123 | Reso: Print (Color) | This is basically adjusted by the remote system.<br>[0 to 3 / **2** / 1/step] | | |
| | Selects the resolution for color print mode. This is basically adjusted by the remote system.<br>0: 600dpi/ 1: 300dpi/ 2: 150dpi/ 3: 75dpi | | | |
| 124 | Reso: Print (Color) | This is basically adjusted by the remote system.<br>[0 to 5 / **3** / 1/step] | | |
| | Selects the resolution for BW print mode. This is basically adjusted by the remote system.<br>0: 600dpi/ 1: 400dpi/ 2: 300dpi/ 3: 200dpi/ 4: 150dpi/ 5: 100dpi | | | |

| **5839** | **[IEEE1394]** | *CTL | - |
|---|---|---|---|
| 007 | Cycle Master | Turns the cycle master function on/off.<br>[0 or 1 / **1** / 1 /step]<br>0: OFF<br>1: ON | |
| 008 | BCR mode | Selects either ‘Standard’, 'IRM Color Copy', or **'Always Effective'.** | |
| 009 | IRM 1394a Check | Turns the IRM 1394a check on/off.<br>[0 or 1 / **0** / - ]<br>0: OFF<br>1: ON<br>If the IRM is not defined as 1394a standard, its node is used as IRM. | |

| | | |
|---|---|---|
| 010 | Unique ID | [0 or 1 / **1** / - ]<br>0: OFF<br>1: ON |
| 011 | Logout | Prevents initiators from logging on or makes initiators log off.<br>[0 or 1 / **1** / - ]<br>0: OFF (Prevents the initiators, having already logged on, to log on if they try to log on.)<br>1: ON (Makes initiators, having already logged on, to log off if they try to log on.) |
| 012 | Login | Allows/disallows an initiator to exclusively log on.<br>[0 or 1 / **0** / - ]<br>0: OFF (Disallows)<br>1: ON (Allows) |
| 013 | Login MAX | Specifies the maximum initiators able to log on.<br>[0 to 63 / **8** / 1 /step] |

| **5840** | **[IEEE 802.11b]** | | |
|---|---|---|---|
| 006 | Channel Max | *CTL | [1 to 11 or 13 / **11 or 13** / 1 /step]<br>Europe/Asia: 1 to 13<br>NA/ Asia: 1 to 11 |
| | Sets the maximum number of channels available for data transmission via the wireless LAN. The number of channels available varies according to location. The default settings are set for the maximum end of the range for each area. Adjust the upper 4 bits to set the maximum number of channels. **DFU**<br>Note<br>▪ Do not change the setting. | | |
| 007 | Channel Min | *CTL | [1 to 11 or 13 / **1** / 1 /step]<br>Europe: 1 to 13<br>NA/ Asia: 1 to 11 |
| | Sets the minimum number of channels available for data transmission via the wireless LAN. The number of channels available varies according to location. The default settings are set for the minimum end of the range for each area. Adjust the lower 4 bits to set the minimum number of channels. **DFU**<br>Note<br>▪ Do not change the setting. | | |

| | | | |
|---|---|---|---|
| 008 | Transmission Speed | *CTL | [0 x 00 to 0 x FF / **0 x FF to Auto** / -]<br>**0 x FF to Auto** [Default]<br>0 x 11 – 55M Fix<br>0 x 10 – 48M Fix<br>0 x 0F – 36M Fix<br>0 x 0E – 18M Fix<br>0 x 0D – 12M Fix<br>0 x 0B – 9M Fix<br>0 x 0A – 6M Fix<br>0 x 07 – 11M Fix<br>0 x 05 – 5.5M Fix<br>0 x 08 – 1M Fix<br>0 x 13 – 0 x FE (reserved)<br>0 x 12 – 72M (reserved)<br>0 x 09 – 22M (reserved) |
| 011 | WEP key Select | *CTL | Selects the WEP key.<br>[00 to 11 / **00** / 1 binary]<br>00: Key #1<br>01: Key #2 (Reserved)<br>10: Key #3 (Reserved)<br>11: Key #4 (Reserved) |
| 042 | Fragment Thresh | *CTL | Adjusts the fragment threshold for the IEEE802.11 card.<br>[256 to 2346 / **2346** / 1]<br>This SP is displayed only when the IEEE802.11 card is installed. |
| 043 | 1g CTS to Self | *CTL | Determines whether the CTS self function is turned on or off.<br>[0 to 1 / **1** / 1] 0: Off, 1: On<br>This SP is displayed only when the IEEE802.11 card is installed. |

| | | | |
|---|---|---|---|
| 044 | 11g Slot Time | *CTL | Selects the slot time for IEEE802.11.<br>[0 to 1 / **0** / 1] 0: 20 µm, 1: 9 µm |
| 045 | WPA Debug Lvl | *CTL | Selects the debug level for WPA authentication application.<br>[1 to 3 / **3** / 1] 1: Info, 2: warning, 3: error<br>This SP is displayed only when the IEEE802.11 card is installed. |

| **5841** | **[Supply Name Setting]** | | |
|---|---|---|---|
| 001 | Toner Name Setting: Black | *CTL | Specifies supply names. These appear on the screen when the user presses the Inquiry button in the user tools screen. |
| 002 | Toner Name Setting: Cyan | | |
| 003 | Toner Name Setting: Yellow | | |
| 004 | Toner Name Setting: Magenta | | |
| 007 | OrgStamp | | |
| 011 | Staple Std1 | | |
| 012 | Staple Std2 | | |
| 013 | Staple Std3 | | |
| 021 | Staple Bind 1 | | |

| **5842** | **[GWWS Analysis Mode] DFU** | | |
|---|---|---|---|
| 001 | Setting 1 | *CTL | Default: **00000000** – do not change<br>Netfiles: Jobs to be printed from the document server using a PC and the DeskTopBinder software |
| 002 | Setting 2 | *CTL | Adjusts the debug program modesetting.<br>Bit7: 5682 mmseg-log setting<br>0: Date/Hour/Minute/Second<br>1: Minute/Second/Msec.<br>0 to 6: Not used |

| **5844** | **[USB]** | | |
|---|---|---|---|
| 001 | Transfer Rate | *CTL | 0x01: Full speed<br>**0x04: Auto Change** |
| | Adjusts the USB transfer rate. | | |
| 002 | Vendor ID | *CTL | Displays the vendor ID. **DFU** |
| 003 | Product ID | *CTL | Displays the product ID. **DFU** |
| 004 | Device Release Number | *CTL | Displays the development release version number. **DFU** |

| | | | |
|---|---|---|---|
| **5845** | **[Delivery Server Setting]** | *CTL | - |
| | Provides items for delivery server settings. | | |
| 001 | FTP Port No. | [0 to 65535 / **3670** / 1 /step] | |
| | Sets the FTP port number used when image files to the Scan Router Server. | | |
| 002 | IP Address (Primary) | Range: **000.000.000.000** to 255.255.255.255 | |
| | Use this SP to set the Scan Router Server address. The IP address under the transfer tab can be referenced by the initial system setting. | | |
| 006 | Delivery Error Display Time | [0 to 999 / **300** / 1 second /step] | |
| | Use this setting to determine the length of time the prompt message is displayed when a test error occurs during document transfer with the NetFile application and an external device. | | |
| 008 | IP Address (Secondary) | Range: **000.000.000.000** to 255.255.255.255 | |
| | Specifies the IP address assigned to the computer designated to function as the secondary delivery server of Scan Router. This SP allows only the setting of the IP address without reference to the DNS setting. | | |
| 009 | Delivery Server Model | [0 to 4/ **0** / 1 /step] | |
| | Allows changing the model of the delivery server registered by the I/O device.<br>0: Unknown<br>1: SG1 Provided<br>2: SG1 Package<br>3: SG2 Provided<br>4: SG2 Package | | |

| | | |
|---|---|---|
| 010 | Delivery Svr Capability | [0 to 255 / **0** / 1 /step] |
| | Changes the capability of the registered that the I/O device registered. | |
| | Bit7 = 1 Comment information exits | |
| | Bit6 = 1 Direct specification of mail address possible | |
| | Bit5 = 1 Mail RX confirmation setting possible | |
| | Bit4 = 1 Address book automatic update function exists | |
| | Bit3 = 1 Fax RX delivery function exists | |
| | Bit2 = 1 Sender password function exists | |
| | Bit1 = 1 Function to link MK-1 user and Sender exists | |
| | Bit0 = 1 Sender specification required (if set to 1, Bit6 is set to “0”) | |
| 011 | Delivery Svr Capability (Ext) | [0 to 255 / **0** / 1 /step] |
| | Changes the capability of the registered that the I/O device registered. | |
| | Bit7 = 1 Address book usage limitation (Limitation for each authorized user)<br>Bit6 = 1 RDH authorization link<br>Bit5 to 0: Not used | |
| 013 | Server Scheme (Primary) **DFU** | |
| | This is used for the scan router program. | |
| 014 | Server Port Number (Primary) **DFU** | |
| | This is used for the scan router program. | |
| 015 | Server URL Path (Primary) **DFU** | |
| | This is used for the scan router program. | |

| | |
|---|---|
| 016 | Server Scheme (Secondary) **DFU** |
| | This is used for the scan router program. |
| 017 | Server Port Number (Secondary) **DFU** |
| | This is used for the scan router program. |
| 018 | Server URL Path (Secondary) **DFU** |
| | This is used for the scan router program. |
| 019 | Capture Server Scheme **DFU** |
| | This is used for the scan router program. |
| 020 | Capture Server Port Number **DFU** |
| | This is used for the scan router program. |
| 021 | Capture Server URL Path **DFU** |
| | This is used for the scan router program. |
| 022 | Rapid Sending Control |
| | Enables or disables the prevention function for the continuous data sending error.<br>[0 to 1 / **0** / -]<br>0: Disable, 1: Enable |

| | | | |
|---|---|---|---|
| **5846** | **[UCS Settings]** | *CTL | - |
| 001 | Machine ID (For Delivery Server) | | Displays ID |
| | Displays the unique device ID in use by the delivery server directory. The value is only displayed and cannot be changed. This ID is created from the NIC MAC or IEEE 1394 EUI. The ID is displayed as either 6-byle or 8-byte binary. | | |
| 002 | Machine ID Clear (For Delivery Server) | | Clears ID |
| | Clears the unique ID of the device used as the name in the file transfer directory. Execute this SP if the connection of the device to the delivery server is unstable. After clearing the ID, the ID will be established again automatically by cycling the machine off and on. | | |
| 003 | Maximum Entries | | [2000 to 20000/ **2000** /1 /step] |
| | Changes the maximum number of entries that UCS can handle.<br>If a value smaller than the present value is set, the UCS managed data is cleared, and the data (excluding user code information) is displayed. | | |
| 006 | Delivery Server Retry Timer | | [0 to 255 / **0** / 1 /step] |
| | Sets the interval for retry attempts when the delivery server fails to acquire the delivery server address book. | | |
| 007 | Delivery Server Retry Times | | [0 to 255 / **0** / 1 /step] |
| | Sets the number of retry attempts when the delivery server fails to acquire the delivery server address book. | | |
| 008 | Delivery Server Maximum Entries | | [2000 to 50000 / **2000** / 1/step] |
| | Sets the maximum number account entries of the delivery server user information managed by UCS. | | |

| | | |
|---|---|---|
| 010 | LDAP Search Timeout | [1 to 255 / **60** / 1 /step] |
| | Sets the length of the timeout for the search of the LDAP server. | |
| 040 | Addr Book Migration (SD => HDD) | |
| | Not used in this machine. | |
| 041 | Fill Addr Acl Info. | |
| | This SP must be executed immediately after installation of an HDD unit in a basic machine that previously had no HDD. The first time the machine is powered on with the new HDD installed, the system automatically takes the address book from the NVRAM and writes it onto the new HDD. However, the new address book on the HDD can be accessed only by the system administrator at this stage. Executing this SP by the service technician immediately after power on grants full address book access to all users.<br>Procedure<br>1. Turn the machine off.<br>2. Install the new HDD.<br>3. Turn the machine on.<br>4. The address book and its initial data are created on the HDD automatically.<br>5. However, at this point the address book can be accessed by only the system administrator or key operator.<br>6. Enter the SP mode and do SP5846 041. After this SP executes successfully, any user can access the address book. | |
| 043 | Addr Book Media | Displays the slot number where an address book data is in.<br>[0 to 30 / **-** /1]<br>0: Unconfirmed<br>1: SD Slot 1<br>2: SD Slot 2<br>4: USB Flash ROM<br>20: HDD<br>30: Nothing |

| | | |
|---|---|---|
| 047 | Initialize Local Addr Book | Clears the local address book information, including the user code. |
| 048 | Initialize Delivery Addr Book | Clears the distribution address book information, except the user code. |
| 049 | Initialize LDAP Addr Book | Clears the LDAP address book information, except the user code. |
| 050 | Initialize All Addr Book | Clears all directory information managed by UCS, including all user codes. |
| 051 | Backup All Addr Book | Uploads all directory information to the SD card. |
| 052 | Restore All Addr Book | Downloads all directory information from the SD card. |
| 053 | Clear Backup Info | Deletes the address book data from the SD card in the service slot.<br>Deletes only the files that were uploaded from this machine.<br>This feature does not work if the card is write-protected.<br>Note<br>▪ After you do this SP, go out of the SP mode, and then turn the power off.<br>▪ Do not remove the SD card until the Power LED stops flashing. |

| | | |
|---|---|---|
| 060 | Search Option | |
| | This SP uses bit switches to set up the fuzzy search options for the UCS local address book.<br>Bit: Meaning<br>0: Checks both upper/lower case characters<br>1: Japan Only<br>2: Japan Only<br>3: Japan Only<br>4 to 7: Not Used | |
| 062 | Complexity Option 1 | |
| | Use this SP to set the conditions for password entry to access the local address book. Specifically, this SP limits the password entry to **upper case** and sets the length of the password.<br>[0 to 32 / **0** / 1 /step]<br>Note<br>▪ This SP does not normally require adjustment.<br>▪ This SP is enabled only after the system administrator has set up a group password policy to control access to the address book. | |
| 063 | Complexity Option 2 **DFU** | |
| 064 | Complexity Option 3 **DFU** | |
| 065 | Complexity Option 4 **DFU** | |
| 091 | FTP Auth Port Setting | Specifies the FTP port for getting a distribution server address book that is used in the identification mode.<br>[0 to 65535 / **3671** / 1 /step] |
| 094 | Encryption Stat | Shows the status of the encryption function for the address book data. |

| | | | |
|---|---|---|---|
| **5847** | **[Rep Resolution Reduction]** | *CTL | - |
| | 5847 1 through 5847 8 changes the default settings of image data transferred externally by the Net File page reference function.<br>[ 0 to 5 / **2** / 1 /step]<br>5847 21 sets the default for JPEG image quality of image files handled by NetFile.<br>“Net files” are jobs to be printed from the document server using a PC and the DeskTopBinder software. | | |
| 001 | Rate for Copy Color | 0: 1x<br>1: 1/2x<br>**2: 1/3x**<br>3: 1/4x<br>4: 1/6x<br>5: 1/8x | |
| 002 | Rate for Copy B&W Text | | |
| 003 | Rate for Copy B&W Other | | |
| 004 | Rate for Printer Color | | |
| 005 | Rate for Printer B&W | | |
| 021 | Network Quality Default for JPEG | | |
| | Sets the default value for the quality of JPEG images sent as NetFile pages. This function is available only with the MLB (Media Link Board) option installed.<br>[5 to 95 / **50** / 1 /step] | | |

| | | | |
|---|---|---|---|
| **5848** | **[Web Service]** | *CTL | - |
| | 5848 2 sets the 4-bit switch assignment for the access control setting. Setting of 0001 has no effect on access and delivery from Scan Router.<br>5848 100 sets the maximum size allowed for downloaded images. The default is equal to 1 gigabyte. | | |
| 002 | Access Ctrl: Repository (only Lower 4 bits) | 0000: No access control<br>0001: Denies access to DeskTop Binder.<br>**0010**: No writing control | |

| | | |
|---|---|---|
| 003 | Access Control: Doc. Svr. Print (Lower 4 bits) | Switches access control on and off.<br>**0000**: No access control<br>0001: Denies access to DeskTop Binder. |
| 004 | Access Control: User Directory (only Lower 4 bits) | |
| 007 | Access Ctrl: Comm. Log Fax (Lower 4 bits) | |
| 009 | Access Ctrl: Job Ctrl (Lower 4 bits) | |
| 011 | Access Ctrl: Device management (Lower 4 bits) | |
| 021 | Access Ctrl: Delivery (Lower 4 bits) | |
| 022 | Access Ctrl: uAdministration (Lower 4bits) | |
| 100 | Repository: Download Image Max. Size | Specifies the max size of the image data that the machine can download.<br>[1 to 1024 / **1024** / 1 MB /step] |
| 210 | Setting: LogType: Job1 | NIA |
| 211 | Setting: LogType: Job2 | |
| 212 | Setting: LogType: Access | |
| 213 | Setting: Primary Srv | |
| 214 | Setting: Secondary Srv | |
| 215 | Setting: Start Time | |
| 216 | Setting: Interval Time | |
| 217 | Setting: Timing | |

| **5849** | **[Installation Date]** | *CTL | - |
|---|---|---|---|
| 5849 1 | Display | The “Counter Clear Day” has been changed to “Installation Date” or “Inst. Date”. | |
| 5849 2 | Switch to Print | Determines whether the installation date is printed on the printout for the total counter.<br>[0 or 1 / **1** / - ]<br>0: OFF (No Print)<br>1: ON (Print) | |
| 003 | Total Counter | - | |

| **5850** | **[Address Book Function]** | *CTL | - |
|---|---|---|---|
| 003 | Replacement of Circuit Classification **Japan Only** | | |
| | The machine is sold ready to use with a G3 line. This SP allows you to switch all at once to convert to G4 after you add a G4 line. Conversely, if for some reason the G4 line becomes unusable, you can easily switch back to G3. | | |

| **5851** | **[Bluetooth Mode]** |
|---|---|
| | Sets the operation mode for the Bluetooth Unit. Press either key.<br>[0:Public] [1: Private] |

| **5853** | **[Stamp Data Download]** |
|---|---|
| | Use this SP to download the fixed stamp data stored in the firmware of the ROM and copy it to the HDD. This SP can be executed as many times as required. This SP must be executed after replacing or formatting the hard disks.<br>Note<br>▪ This SP can be executed only with the hard disks installed. |

| | | | |
|---|---|---|---|
| **5856** | **[Remote ROM Update]** | | |
| | Allows the technician to upgrade the firmware using a local port (IEEE1284) when updating the remote ROM. | | |
| 002 | Local Port | *CTL | [0 to 1 / **0** / 1/step]<br>0: Disable<br>1: Enable |

| | | | |
|---|---|---|---|
| **5857** | **[Save Debug Log]** | *CTL | - |
| 001 | On/Off (1:ON 0:OFF) | **0**: OFF, 1: ON | |
| | Switches the debug log feature on and off. The debug log cannot be captured until this feature is switched on. | | |
| 002 | Target (2: HDD 3: SD) | **2**: HDD, 3: SD Card | |
| | Selects the storage device to save debug logs information when the conditions set with SP5-858 are satisfied.<br>[ 2 to 3 / **2** / 1 /step] | | |
| 005 | Save to HDD | | |
| | Saves the debug log of the input SC number in memory to the HDD.<br>A unique file name is generated to avoid overwriting existing file names on the SD Card. Up to 4MB can be copied to an SD Card. 4 MB segments can be copied one by one to each SD Card. | | |
| 006 | Save to SD Card | | |
| | Saves the debug log of the input SC number in memory to the SD card. | | |
| 009 | Copy HDD to SD Card (Latest 4 MB) | | |
| 010 | Copy HDD to SD Card (Latest 4 MB Any Key) | | |
| 011 | Erase HDD Debug Data | | |

| | |
|---|---|
| 012 | Erase SD Card Debug Data |
| 013 | Free Space on SD Card |
| 014 | Copy SD to SD (Latest 4 MB) |
| 015 | Copy SD to SD (Latest 4 MB Any Key) |
| 016 | Make HDD Debug |
| 017 | Make SD Debug |

| | | | |
|---|---|---|---|
| **5858** | **[Debug Save When]** | *CTL | - |
| | These SPs select the content of the debugging information to be saved to the destination selected by SP5857-002.<br>SP5858-3 stores one SC specified by number. Refer to Section 4 for a list of SC error codes. | | |
| 001 | Engine SC Error | Turns on/off the debug save for SC codes generated by copier engine errors.<br>[0 or 1 / **0** / 1/ step]<br>0: OFF, 1: ON | |
| 002 | Controller SC Error | Turns on/off the debug save for SC codes generated by GW controller errors.<br>[0 or 1 / **0** / 1/ step]<br>0: OFF, 1: ON | |
| 003 | Any SC Error | [0 to 65535 / **0** / 1 /step] | |
| 004 | Jam | Turns on/off the debug save for jam errors.<br>[0 or 1 / **0** / 1/ step]<br>0: OFF, 1: ON | |

| **5859** | **[Debug Save Key No.]** | *CTL | **-** |
|---|---|---|---|
| 001 | Key 1 | These SPs allow you to set up to 10 keys for log files for functions that use common memory on the controller board.<br>[–9999999 to 9999999 / **0** / – ] | |
| 002 | Key 2 | | |
| 003 | Key 3 | | |
| 004 | Key 4 | | |
| 005 | Key 5 | | |
| 006 | Key 6 | | |
| 007 | Key 7 | | |
| 008 | Key 8 | | |
| 009 | Key 9 | | |
| 010 | Key 10 | | |

| | | | |
|---|---|---|---|
| **5860** | **[SMTP/POP3/IMAP4]** | *CTL | **-** |
| 020 | Partial Mail Receive Timeout | | [1 to 168 / **72** / – ] |
| | Sets the amount of time to wait before saving a mail that breaks up during reception. The received mail is discarded if the remaining portion of the mail is not received during this prescribed time. | | |
| 021 | MDN Response RFC2298 Compliance | | [0 to 1 / **1** / – ] |
| | Determines whether RFC2298 compliance is switched on for MDN reply mail.<br>0: No<br>**1**: Yes | | |
| 022 | SMTP Auth. From Field Replacement | | [0 to 1 / **0** / – ] |
| | Determines whether the FROM item of the mail header is switched to the validated account after the SMTP server is validated.<br>**0**: No. “From” item not switched.<br>1: Yes. “From item switched. | | |
| 025 | SMTP Auth. Direct Setting | | [0 or 1 / **0** / – ] |
| | Selects the authentication method for SMPT.<br>**Bit switch:**<br>• Bit 0: LOGIN<br>• Bit 1: PLAIN<br>• Bit 2: CRAM MD5<br>• Bit 3: DIGEST MD5<br>• Bit 4 to 7: Not used<br>Note<br>▪ This SP is activated only when SMTP authorization is enabled by UP mode. | | |

| | | | |
|---|---|---|---|
| 026 | S/MIVE: MIME Header Setting | - | Selects the MIME header type of an E-mail sent by S/MIME.<br>[0 to 2 / **0** / 1]<br>0: Microsoft Outlook Express standard<br>1: Internet Draft standard<br>2: RFC standard |

| **5866** | **[E-mail Alert] Not Used** | | |
|---|---|---|---|
| 005 | Add Date Field | *CTL | Adds or does not add the date field to the header of the alert mail.<br>[0 or 1 / **0** / – ]<br>0: Not added, 1: Added |

| **5870** | **[Common Key Info Writing]** | | |
|---|---|---|---|
| 001 | Writing | *CTL | Writes to flash ROM the common proof for validating the device for NRS specifications. |

| **5873** | **[SD Card Appli Move]** | |
|---|---|---|
| 001 | Move Exec | This SP copies the application programs from the original SD card in SD card slot 3 to an SD card in SD card slot 1 or 2 (slot 1 has the priority to be copied). |
| 002 | Undo Exec | This SP copies back the application programs from an SD card in SD Card Slot 3 to the original SD card in SD card slot 1 or 2 (slot 1 has the priority to be copied). Use this menu when you have mistakenly copied some programs by using "Move Exec" (SP5873-1). |

| **5875** | **[SC Auto Reboot]** | | |
|---|---|---|---|
| 001 | Reboot Setting | *CTL | Enables or disables the automatic reboot function when an SC error occurs.<br>[0 or 1/ **0** / – ]<br>0: The machine reboots automatically when the machine issues an SC error and logs the SC error code. If the same SC occurs again, the machine does not reboot.<br>1: The machine does not reboot when an SC error occurs.<br>The reboot is not executed for Type A or C SC codes. |
| 002 | Reboot Type | *CTL | Selects the reboot method for SC.<br>[0 or 1 / **0** / -]<br>0: Manual reboot, 1: Automatic reboot |

| **5878** | **[Option Setup]** | | |
|---|---|---|---|
| 001 | Option Setup | - | Enables the Data Overwrite Security unit. Press "EXECUTE" on the operation panel. Then turn the machine off and on. |
| 002 | HDD Encryption | - | Installs the HDD Encryption unit. |

| **5881** | **[Fixed Phrase Block Erasing]** | | |
|---|---|---|---|
| 001 | - | - | Deletes the fixed phrase. |

| | | | |
|---|---|---|---|
| **5883** | **[Line Speed Selection]** | | |
| | Selects the line speed for middle thick paper. | | |
| 001 | Middle Thick | *ENG | [0 or 1 / **1** / 1 /step]<br>0: MID CARD: Half Speed (115 mm/sec)<br>1: MID CARD: Normal Speed (C2c: 154, C2d: 205 mm/sec) |

| | | | |
|---|---|---|---|
| **5885** | **[WIM Settings]** Web Image Monitor Settings | | |
| | Close or disclose the functions of web image monitor. | | |
| 020 | Document Server ACC Ctrl | *CTL | 0: OFF, 1: ON<br>Bit Meaning<br>0: Forbid all document server access (1)<br>1: Forbid user mode access (1)<br>2: Forbid print function (1)<br>3: Forbid fax TX (1)<br>4: Forbid scan sending (1)<br>5: Forbid downloading (1)<br>6: Forbid delete (1)<br>7: Reserved |
| 050 | DocSvr Format | | Selects the display type for the document box list.<br>[0 to 2 / **0** / 1]<br>0: Thumbnail, 1: Icon, 2: Details |
| 051 | DocSvr Trans | | Sets the number of documents to be displayed in the document box list.<br>[5 to 20 / **10** / 1] |

| | | | |
|---|---|---|---|
| 101 | Set Encryption | | Determines whether the scanned documents with the WIM are encrypted when they are transmitted by an e-mail.<br>[0 to 1 / **0** / 1]<br>0: Not encrypted, 1:Encryption |

| | | | |
|---|---|---|---|
| **5886** | **[Permit ROM Updating] DFU** | | |
| | This SP determines whether the ROM can be updated. | | |
| 001 | - | *CTL | [0 or 1 / **0** / 1/step]<br>0: ON, 1: OFF |

⇒

| | | | |
|---|---|---|---|
| **5887** | **[**SD Get Counter**] DFU** | | |
| | This SP sends a text file to an SD card inserted in SD card Slot 2 (lower slot) and stored in a folder created in the root directory of the SD card called SD_COUNTER. The file is saved as a text file (*txt) prefixed with the number of the machine. | | |
| 001 | - | *CTL | 1. Insert the SD card in SD card Slot 2 (lower slot).<br>2. Select SP5887 then touch [EXECUTE].<br>Touch [Execute] in the message when you are prompted. |

| | | | |
|---|---|---|---|
| **5888** | **[Personal Information Protect]** | | |
| 001 | - | *CTL | Selects the protection level for logs.<br>[0 to 1 / **0** / 1}<br>0: No authentication, or log protection<br>1: No authentication, Protected logs (only an administrator can see the logs) |
| **5894** | **[External Charge Unit Setting]** Used with the external keycounter/coin counter using the Optional 20 Interface Unit Type A 20-pin connection | | |
| 001 | Switch Charge Mode | *ENG | [0 to 2 / **0** / 1/step] |
| | Pattern 0 (SP5-894-001=0: Default setting) Default pattern which allows separate counter for print, FAX (reception), B/W copy, and Full-color copy.<br>Pattern 1 (SP5-894-001=1) Separate counter for B/W and color is available under this pattern. However, it is not possible to distinguish between Copier and Printer outputs.<br>Pattern 2 (SP5-894-001=2) With this setting, it is possible to distinguish between B/W and color outputs for both the Copier and Printer. However, it is not possible to manage FAX reception documents. | | |
| **5895** | **[Application Invalidation]** | | |
| | **NOTE:** For Fiery Installation, please refer to the D480/D479 Service Manual. | | |
| 001 | Printer<br>Scanner | *ENG | Off 0 (Default) On 1 |
| **5907** | **[Plug & Play Maker/Model Name]** | | |
| | Selects the brand name and the production name for Windows Plug & Play. This information is stored in the NVRAM. If the NVRAM is defective, these names should be registered again.<br>After selecting, press the "Original Type" key and "#" key at the same time. When the setting is completed, the beeper sounds five times. | | |
| **5913** | **[Switchover Permission Time]** | | |
| 002 | Print Application Timer | *CTL | [3 to 30 / **3** / 1 second /step] |
| | Sets the amount of time to elapse while the machine is in standby mode (and the operation panel keys have not been used) before another application can gain control of the display. | | |

| | | | |
|---|---|---|---|
| **5967** | **[Copy Server Set Function]** | *CTL | **0**: ON, 1: OFF |
| | Enables and disables the document server. This is a security measure that prevents image data from being left in the temporary area of the HDD. After changing this setting, you must switch the main switch off and on to enable the new setting. | | |

| | | | |
|---|---|---|---|
| **5974** | **[Cherry Server]** | | |
| | Specifies which version of ScanRouter, “Lite” or “Full”, is installed. | | |
| 001 | Cherry Server | *CTL | [0 or 1 / **0** / – ]<br>0: Lite<br>1: Full |

| | | |
|---|---|---|
| **5985** | **[Device Setting]** | |
| | The NIC and USB support features are built into the GW controller. Use this SP to enable and disable these features. In order to use the NIC and USB functions built into the controller board, these SP codes must be set to "1". | |
| 001 | On Board NIC | [0 to 2 / **0** / 1 /step]<br>0: Disable, 1: Enable, 2: Function limitation<br>When the "Function limitation" is set, "On board NIC" is limited only for the NRS or LDAP/NT authentication.<br>Note<br>▪ Other network applications such as WebImageMonitor, NRS or LDAP/NT authentication are not available when this SP is set to "2". Even though you can change the initial settings of those network applications, the settings do not work. |
| 002 | On Board USB | [0 or 1 / **0** / 1/step]<br>0: Disable, 1: Enable |

| **5987** | **[Mech. Counter]** | |
|---|---|---|
| 001 | 0: OFF / 1: ON | This SP detects that a mechanical counter device is removed. If it is detected, SC610 occurs. |

| **5990** | **[SP print mode]** | | |
|---|---|---|---|
| | Prints out the SMC sheets. | | |
| 001 | All (Data List) | - | - |
| 002 | SP (Mode Data List) | - | |
| 003 | User Program | - | |
| 004 | Logging Data | - | |
| 005 | Diagnostic Report | - | |
| 006 | Non-Default | - | |
| 007 | NIB Summary | - | |
| 008 | Capture Log | - | |
| 021 | Copier User Program | - | |
| 022 | Scanner SP | - | |
| 023 | Scanner User Program | - | |

## *SP6-XXX (Peripherals)*

| | | | |
|---|---|---|---|
| **6006** | **[ADF Adj.]** ADF Adjustment | | |
| | Adjusts the side-to-side and leading registration of originals with the ARDF. | | |
| 001 | Side-to-Side Registration | *ENG | [-3.0 to 3.0 / **0** / 0.1 mm/step ] |
| 002 | Side-to-Side Registration (2nd side) | | |
| 003 | Leading Edge Registration | | [-5.0 to 5.0 / **0** / 0.1 mm/step ] |
| | Adjusts the amount of paper buckle to correct original skew for the front and rear sides. | | |
| 005 | Buckle: Duplex Front | *ENG | [-3.0 to 3.0 / **0** / 0.1 mm/step ] |
| 006 | Buckle: Duplex Rear | | [-2.5 to 2.5 / **0** / 0.1 mm/step ] |
| | Adjusts the erase margin at the original trailing edge. | | |
| 007 | Rear Edge Erase | *ENG | [-10 to 10 / **0** / 0.1 mm/step ] |

| | |
|---|---|
| **6007** | **[ADF Input Check]** |
| | Displays the signals received from the sensors and switches of the ARDF. Only Bit 0 is used for ADF input check (☛ “Iutput Check Table” in this section"). |

| | |
|---|---|
| **6008** | **[ADF Output Check]** |
| | Activates the electrical components for functional check.<br>It is not possible to activate more than one component at the same time (☛ “Output Check Table” in this section") |

| | | | |
|---|---|---|---|
| **6009** | **[ADF Free Run]** | | |
| | Performs a DF free run in simplex, duplex mode or stamp mode. | | |
| 001 | Free Run Simplex Motion | - | - |
| 002 | Free Run Duplex Motion | - | |
| 003 | Free Run Stamp Motion | - | |

| | | | |
|---|---|---|---|
| **6010** | **[Stamp Position Adj.]** Fax Stamp Position Adjustment | | |
| | Adjusts the horizontal position of the stamp on the scanned originals. | | |
| 6010 1 | Stamp Position Adj. | *ENG | [-5.0 to 5.0 / **0** / 1 mm/step] |

| | | | | |
|---|---|---|---|---|
| **6016** | **[Original Size Detection Priority]** Original Size Detection Priority | | | |
| | Specifies the original size for a size detected by the original sensor, since original sensors cannot recognize all sizes. | | | |
| 001 | Original Size Detection Priority | *ENG | [0 or 1 / **0** / - ]<br>0: Setting 1<br>1: Setting 2 | |
| | | NA | Setting 1 | Setting 2 |
| | | | DLT SEF | Folio SEF 11" x 15" |
| | | | LG SEF | Foolscap SEF |
| | | | LT SEF | US EXE 8" x 10" |
| | | | LT LEF | US EXE LEF |
| | | EU/ ASIA | DLT SEF | 8K 267 x 390 mm |
| | | | LT SEF | 16K 195 x 267 mm |
| | | | LT LEF | 16K 267 x 195 mm |

| | | | |
|---|---|---|---|
| **6017** | **[DF Magnification Adj.]** DF Magnification Adjustment | | |
| | Adjusts the magnification in the sub-scan direction for the ARDF. | | |
| 001 | DF Magnification Adj. | *CTL | [-5.0 to 5.0 / **0** / 0.1 %/step] |

| | | | |
|---|---|---|---|
| **6123** | **[Jogger Position Adj.]** | | |
| | Adjusts the jogger position. | | |
| 001 | - | ENG | [-4.0 to 4.0 / **0** / 0.4 mm/step] |

| | | | |
|---|---|---|---|
| **6128** | **[Punch Position: Sub Scan]** | | |
| | Adjusts the punching position in the sub scan direction. | | |
| 001 | Domestic (Japan) 2Hole | *ENG | [-7.5 to 7.5 / **0** / 0.5 mm/step]] |
| 002 | North America 3Hole | *ENG | |
| 003 | Europe 4Hole | *ENG | |
| 004 | North Europe 4Hole | *ENG | |
| 005 | North Europe 2Hole | *ENG | |

| | | | |
|---|---|---|---|
| **6129** | **[Punch Position: Main Scan]** | | |
| | Adjusts the punching position in the main scan direction. | | |
| 001 | Domestic (Japan) 2Hole | *ENG | [-2.0 to 2.0 / **0** / 0.4 mm/step]] |
| 002 | North America 3Hole | *ENG | |
| 003 | Europe 4Hole | *ENG | |
| 004 | North Europe 4Hole | *ENG | |
| 005 | North Europe 2Hole | *ENG | |

| | | | |
|---|---|---|---|
| **6130** | **[Skew Correction: Buckle Adj.]** | | |
| | Adjusts the paper buckle for each paper size. | | |
| 001 | A3T | *ENG | [-5.0 to 5.0 / **0** / 0.25 mm/step]] |
| 002 | B4T | *ENG | |
| 003 | A4T | *ENG | |
| 004 | A4Y | *ENG | |
| 005 | B5T | *ENG | |
| 006 | B5Y | *ENG | |
| 007 | DLT-T | *ENG | |
| 008 | LG-T | *ENG | |
| 009 | LT-T | *ENG | |
| 010 | LT-Y | *ENG | |
| 011 | 12" x 18" | *ENG | |
| 012 | Other | *ENG | |

| | | | |
|---|---|---|---|
| **6131** | **[Skew Correction Control] Not used** | | |
| | Selects the skew correction control for each paper size. These are only activated for B793. | | |
| 001 | A3T | *ENG | [0 or 1 / **1** / 1/step]]<br>0: No (No skew correction)<br>1: Roller Stop Skew Correction |
| 002 | B4T | *ENG | |
| 003 | A4T | *ENG | |
| 004 | A4Y | *ENG | |
| 005 | B5T | *ENG | |
| 006 | B5Y | *ENG | |
| 007 | DLT-T | *ENG | |
| 008 | LG-T | *ENG | |
| 009 | LT-T | *ENG | |
| 010 | LT-Y | *ENG | |
| 011 | 12" x 18" | *ENG | |
| 012 | Other | *ENG | |

| | | | |
|---|---|---|---|
| **6132** | **[Jogger Fence Fine Adj]** | | |
| | This SP adjusts the distance between the jogger fences and the sides of the stack on the finisher stapling tray in the Booklet Finisher B793. The adjustment is done perpendicular to the direction of paper feed. | | |
| 001 | A3T | *ENG | [-1.5 to 1.5 / **0** / 0.5 mm/step]<br>+ Value: Increases distance between jogger fences and the sides of the stack.<br>- Value: Decreases the distance between the jogger fences and the sides of the stack. |
| 002 | B4T | *ENG | |
| 003 | A4T | *ENG | |

| | | | |
|---|---|---|---|
| 004 | A4Y | *ENG | |
| 005 | B5T | *ENG | |
| 006 | B5Y | *ENG | |
| 007 | DLT-T | *ENG | |
| 008 | LG-T | *ENG | |
| 009 | LT-T | *ENG | |
| 010 | LT-Y | *ENG | |
| 011 | 12" x 18" | *ENG | |
| 012 | Other | *ENG | |

| | | | |
|---|---|---|---|
| **6133** | **[Staple Position Adjustment]** | | |
| | Adjusts the staple position for each finisher (B408/B793/D372).<br>+ Value: Moves the staple position to the rear side.<br>- Value: Moves the staple position to the front side. | | |
| 001 | Finisher (B408/B793) | *ENG | [-3.5 to 3.5 / **0** / 1/step] |
| 002 | Finisher (D372) | *ENG | [-2.0 to 2.0 / **0** / 1/step]] |

| 6134 | [Saddle Stitch Position Adjustment] | |
|---|---|---|
| User SP | Use this SP to adjust the stapling position of the booklet stapler when paper is stapled and folded in the Booklet Finisher B793. | |
| 001 | A3T | [-3.0 to 3.0 / **0** / 0.2 mm/step]<br>+ Value: Shifts staple position toward the crease.<br>- Value: Shifts staple position away from the crease.<br> 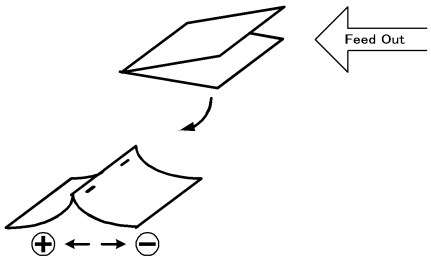 |
| 002 | B4T | |
| 003 | A4T | |
| 004 | B5T | |
| 005 | DLT-T | |
| 006 | LG-T | |
| 007 | LT-T | |
| 008 | 12" x 18" | |
| 009 | Other | |

| 6135 | [Folder Position Adj.] | |
|---|---|---|
| User SP | This SP corrects the folding position when paper is stapled and folded in the Booklet Finisher B793. | |
| 001 | A3T | [-3.0 to 3.0 / **0** / 0.2 mm/step]<br>+ Value: Shifts staple position toward the crease.<br>- Value: Shifts staple position away from the crease.<br> 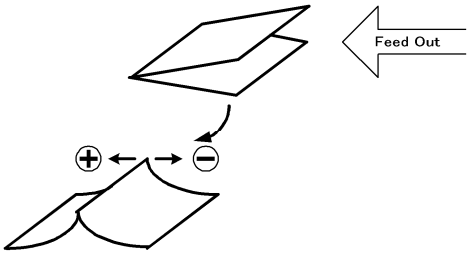 |
| 002 | B4T | |
| 003 | A4T | |
| 004 | B5T | |
| 005 | DLT-T | |
| 006 | LG-T | |
| 007 | LT-T | |

| | | |
|---|---|---|
| 008 | 12" x 18" | |
| 009 | Other | |

| | | |
|---|---|---|
| **6136** | **[Folding Number]** | |
| **User SP** | Sets the number of times that folding is done in the Booklet Finisher B793. | |
| 001 | - | [2 to 30 / **2** / 1 time/step] |

| | | |
|---|---|---|
| **6137** | **[Finisher Free Run]** | |
| | These SPs are used only for B793 finisher. | |
| 001 | Free Run 1 | Free run for paper edge stapling. |
| 002 | Free Run 2 | Free run for booklet stapling. |
| 003 | Free Run 3 | Shipping free run. Simulates standby conditions during shipping. |
| 004 | Free Run 4 | **DFU** |

| | |
|---|---|
| **6138** | **[FIN (TIG) INPUT Check]** Finisher (B793) Input Check |
| | Displays the signals received from sensors and switches of the booklet finisher. (☛ “Iutput Check Table” in this section") |

| | |
|---|---|
| **6139** | **[FIN (KIN) INPUT Check]** Finisher (B408) Input Check |
| | Displays the signals received from sensors and switches of the booklet finisher. (☛ “Iutput Check Table” in this section") |

| | |
|---|---|
| **6140** | **[FIN (EUP) INPUT Check]** Finisher (B804/B805) Input Check |
| | Not Used in this machine |

| | |
|---|---|
| **6143** | **[FIN (TIG) OUPUT Check]** Finisher (B793) Output Check |
| | Displays the signals received from sensors and switches of the booklet finisher. (☛ “Output Check Table” in this section") |

| | |
|---|---|
| **6144** | **[FIN (KIN) OUPUT Check]** Finisher (B408) Output Check |
| | Displays the signals received from sensors and switches of the booklet finisher. (☛ “Output Check Table” in this section") |

| | |
|---|---|
| **6145** | **[FIN (EUP) OUPUT Check]** Finisher (B804/B805) Output Check |
| | Not used in this machine |

| | |
|---|---|
| **6147** | **[FIN (JAK) OUPUT Check]** |
| | Not used in this machine. |

| **6148** | **[Jogger Fine Adj]** | *ENG | Fine Adjust Output Jogger Unit Fences |
|---|---|---|---|
| 001 | A3T | This SP corrects the distance between the jogger fences and the sides of the stack when the output jogger unit attached to the side of the machine jogs sheets as they exit the finisher.<br>+ Value:<br>Increases distance between jogger fences and the sides of the stack.<br>- Value:<br>Decreases the distance between the jogger fences and the sides of the stack.<br>[-1.5 to 1.5 / **0** / 0.5 mm/step] | |
| 002 | B4T | | |
| 003 | A4T | | |
| 004 | A4Y | | |
| 005 | B5Y | | |
| 006 | A5Y | | |
| 007 | DLT-T | | |
| 008 | LG-T | | |
| 009 | LT-T | | |
| 010 | LT-Y | | |
| 011 | HLT-Y | | |
| 012 | Other | | |

| **6149** | **[Max. Pre-Stack Sheet]** | *ENG | Number of Pre-Stack Sheets |
|---|---|---|---|
| | This SP sets the number of sheets sent to the pre-stack tray.<br>**Note**:<br>You may need to adjust this setting or switch it off when feeding thick or slick paper. | | |
| 001 | - | [0 to 3 / **3** / 1 sheet/step] | |

| | |
|---|---|
| **6150** | **[INPUT Check]** |
| | Displays the signals received from sensors and switches of the bridge unit (D386) (☛ "Input Check Table" in this section). |

| | |
|---|---|
| **6151** | **[OUTPUT Check]** |
| | Displays the signals received from sensors and switches of the brisge unit (D386) (☛ "Output Check Table" in this section). |

| | |
|---|---|
| **6152** | **[INPUT Check]** |
| | Displays the signals received from sensors and switches of the shift tray (D388) (☛ "Input Check Table" in this section). |

| | |
|---|---|
| **6153** | **[OUTPUT Check]** |
| | Displays the signals received from sensors and switches of the shift tray (D388) (☛ "Output Check Table" in this section). |

| | |
|---|---|
| **6154** | **[INPUT Check]** |
| | Displays the signals received from sensors and switches of the 1 bin tray (D414) (☛ "Input Check Table" in this section). |

| | |
|---|---|
| **6155** | **[OUTPUT Check]** |
| | Displays the signals received from sensors and switches of the 1 bin tray (D414) (☛ "Output Check Table" in this section) |
| 001 | 1 bin: Junction Solenoid |

| | |
|---|---|
| **6157** | **[OUTPUT Check]** |
| | Not used in this machine |

| | |
|---|---|
| **6160** | **[INPUT Check]** |
| | Displays the signals received from sensors and switches of the two-tray paper feed unit (D351), 2000 sheet LCT (D352) or 1200 sheet LCT (D353) (☛ "Input Check Table" in this section) |

| | |
|---|---|
| **6161** | **[OUTPUT Check]** |
| | Displays the signals received from sensors and switches of the two-tray paper feed unit (D351), 2000 sheet LCT (D352) or 1200 sheet LCT (D353) (☛ "Output Check Table" in this section) |

## *SP7-XXX (Data Log)*

| | | | |
|---|---|---|---|
| **7401** | **[Total SC Counter]** | | |
| | Displays the number of SC codes detected. | | |
| 001 | SC Counter | *CTL | [0 to 9999 / **0** / 1/step ] |

| | | | |
|---|---|---|---|
| **7403** | **[SC History]** | | |
| | Logs the SC codes detected.<br>The 10 most recently detected SC Codes are not displayed on the screen, but can be seen on the SMC (logging) outputs. | | |
| 001 | Latest | *CTL | - |
| 002 | Latest 1 | | |
| 003 | Latest 2 | | |
| 004 | Latest 3 | | |
| 005 | Latest 4 | | |
| 006 | Latest 5 | | |
| 007 | Latest 6 | | |
| 008 | Latest 7 | | |
| 009 | Latest 8 | | |
| 010 | Latest 9 | | |

| | | | |
|---|---|---|---|
| **7502** | **[Total Paper Jam Counter]** | | |
| | Displays the total number of jams detected. | | |
| 001 | Total Jam | * CTL | [0 to 9999 / **0** / 1 sheet/step ] |

| | | | |
|---|---|---|---|
| **7503** | **[Total Original Jam Counter]** | | |
| | Displays the total number of original jams. | | |
| 001 | Original Jam counter | *CTL | [0 to 9999 / **0** / 1 original/step ] |

| | | | |
|---|---|---|---|
| **7504** | **[Paper Jam Location]**<br>ON: On check, OFF: Off Check | | |
| | Displays the number of jams according to the location where jams were detected.<br>**NOTE:** The LCT is counted as the 3rd feed station. | | |
| 001 | At Power On | *CTL | For details, ☛ the "Jam Detection" in the Appendix Jam Detection. |
| 003 | Tray 1: ON | *CTL | |
| 004 | Tray 2: ON | *CTL | |
| 005 | Tray 3: ON | *CTL | |
| 006 | Tray 4: ON | *CTL | |
| 008 | Bypass: ON | *CTL | |
| 009 | Duplex: ON | *CTL | |
| 011 | Vertical Transport 1: ON | *CTL | |
| 012 | Vertical Transport 2: ON | *CTL | |
| 013 | Bank Transport 1 | *CTL | |
| 017 | Registration: ON | *CTL | |
| 018 | Fusing Entrance: ON | *CTL | |
| 019 | Fusing Exit: ON | *CTL | |
| 020 | Paper Exit: ON | *CTL | |

| | | | |
|---|---|---|---|
| 021 | Relay Exit: ON | *CTL | |
| 022 | Relay Transport: ON | *CTL | |
| 025 | Duplex Exit: ON | *CTL | |
| 026 | Duplex Reverse: ON | *CTL | |
| 027 | Duplex Entrance: ON | *CTL | |
| 028 | 1 Bin Exit Sensor | *CTL | For details, ☛ the "Jam Detection" in the Appendix Jam Detection. |
| 051 | SEF Sensor 1 | *CTL | |
| 052 | SEF Sensor 2 | *CTL | |
| 053 | Bank SEF Sensor 1 | *CTL | |
| 054 | Bank SEF Sensor 2 | *CTL | |
| 057 | Regist Sensor | *CTL | |
| 059 | Fusing Exit Sensor | *CTL | |
| 060 | Exit Sensor | *CTL | |
| 061 | Relay Exit Sensor | *CTL | |
| 062 | Relay Sensor | *CTL | |
| 065 | Duplex Exit Sensor | *CTL | |
| 066 | Duplex Entrance Sensor | *CTL | |
| 068 | 1-Bin Exit: ON | *CTL | |
| 100 | Finisher Entrance: KIN | *CTL | |
| 101 | Finisher Shift Tray Exit: KIN | *CTL | |
| 102 | Finisher Staple: KIN | *CTL | |
| 103 | Finisher Exit: KIN | *CTL | |

| | | | |
|---|---|---|---|
| 104 | Finisher Drive Motor: KIN | *CTL | |
| 105 | Finisher Tray Lift Motor: KIN | *CTL | |
| 106 | Finisher Jogger Motor: KIN | *CTL | |
| 107 | Finisher Shift Motor: KIN | *CTL | |
| 108 | Finisher Staple Motor: KIN | *CTL | |
| 109 | Finisher Exit Motor: KIN | *CTL | |
| 191 | Finisher Entrance: EUP | *CTL | For details, ☛ the "Jam Detection" in the Appendix Jam Detection. |
| 192 | Finisher Proof Exit: EUP | *CTL | |
| 193 | Finisher Shift Tray Exit: EUP | *CTL | |
| 194 | Finisher Stapler Exit: EUP | *CTL | |
| 195 | Finisher Exit: EUP | *CTL | |
| 196 | Finisher Staple: EUP | *CTL | |
| 197 | Finisher Saddle Stitch Staple: EUP | *CTL | |
| 198 | Finisher Folder: EUP | *CTL | |
| 199 | Finisher Tray Motor: EUP | *CTL | |
| 200 | Finisher Jogger Motor: EUP | *CTL | |
| 201 | Finisher Shift Motor: EUP | *CTL | |
| 202 | Finisher Staple Moving Motor: EUP | *CTL | |
| 203 | Finisher Staple Motor: EUP | *CTL | |
| 204 | Finisher Folder Motor: EUP | *CTL | |
| 205 | Finisher Exit Motor: EUP | *CTL | |
| 206 | Finisher Punch Motor: EUP | *CTL | |

| | | | |
|---|---|---|---|
| 230 | Finisher Exit No Response | *CTL | |
| 231 | Finisher Communication Error | *CTL | |

| | | | |
|---|---|---|---|
| **7505** | **[Original Jam Detection]** | | |
| | Displays the total number of original jams by location. | | |
| 001 | At Power On | *CTL | - |
| 003 | Separation: ON | | |
| 004 | Skew Correction: ON | | |
| 005 | Reading Entrance Sensor: ON | | |
| 006 | Registration: ON | | |
| 007 | Reading Exit Sensor: ON | | |
| 008 | Paper Exit: ON | | |
| 053 | Separation: OFF | | |
| 054 | Skew Correction: OFF | | |
| 055 | Reading Entrance Sensor: OFF | | |
| 056 | Registration: OFF | | |
| 057 | Reading Exit Sensor: OFF | | |
| 058 | Paper Exit: OFF | | |

| | | | |
|---|---|---|---|
| **7506** | **[Jam Count by Paper Size]** | | |
| | Displays the number of jams according to the paper size. | | |
| 005 | A4 LEF | *CTL | [0 to 9999 / **0** / 1 sheet/step ] |
| 006 | A5 LEF | | |
| 014 | B5 LEF | | |
| 038 | LT LEF | | |
| 044 | HLT LEF | | |
| 132 | A3 SEF | | |
| 133 | A4 SEF | | |
| 134 | A5 SEF | | |
| 141 | B4 SEF | | |
| 142 | B5 SEF | | |
| 160 | DLT SEF | | |
| 164 | LG SEF | | |
| 166 | LT SEF | | |
| 172 | HLT SEF | | |
| 255 | Others | | |

| | | | |
|---|---|---|---|
| **7507** | **[Plotter Jam History]** | | |
| | Displays the 10 most recently detected paper jams. | | |
| 001 | Latest | *CTL | - |
| 002 | Latest 1 | | |
| 003 | Latest 2 | | |
| 004 | Latest 3 | | |
| 005 | Latest 4 | | |
| 006 | Latest 5 | | |
| 007 | Latest 6 | | |
| 008 | Latest 7 | | |
| 009 | Latest 8 | | |
| 010 | Latest 9 | | |

| | | | |
|---|---|---|---|
| **7508** | **[Original Jam History]** | | |
| | Displays the 10 most recently detected original jams. | | |
| 001 | Latest | *CTL | - |
| 002 | Latest-1 | | |
| 003 | Latest-2 | | |
| 004 | Latest-3 | | |
| 005 | Latest-4 | | |
| 006 | Latest-5 | | |
| 007 | Latest-6 | | |
| 008 | Latest-7 | | |
| 009 | Latest-8 | | |
| 010 | Latest-9 | | |

| | | | |
|---|---|---|---|
| **7801** | **[ROM No]** | | |
| 002 | Engine | ENG | Displays the ROM no. for each device. |
| 005 | ADF | ENG | |
| 007 | Finisher | ENG | |
| 009 | Bank | ENG | |
| 019 | Bank2 | ENG | |
| 026 | IH Fusing | ENG | |

| 7801 | [Firmware Version] | | |
|---|---|---|---|
| 102 | Engine | ENG | Displays the firmeare version for each device. |
| 105 | ADF | ENG | |
| 107 | Finisher | ENG | |
| 110 | LCT | ENG | |
| 255 | Engine | *CTL | Displays all versions and ROM numbers in SP7-910 and SP7-911. |

| 7803 | [PM Counter Display] | |
|---|---|---|
| | (Page, Unit, [Color]) | |
| | Displays the number of sheets printed for each current maintenance unit.<br>PM counters click up based on the number of A4 (LT) LEF size sheets printed. Therefore, the A3 (DLT) Double Count is activated. The Double Count cannot be deactivated.<br>When a unit is replaced, the machine automatically detects that the new unit is installed. Then, the current PM counter value is automatically moved to the PM Counter - Previous (SP7-906-1 to 10) and is reset to “0”.<br>The total number of sheets printed with the last unit replaced can be checked with SP7-906-1 to 10.<br>**NOTE:** The LCT is counted as the 3rd feed station. | |
| 002 | Page: PCU: Bk | - |
| 003 | Page: PCU: M | |
| 004 | Page: PCU: C | |
| 005 | Page: PCU: Y | |
| 006 | Page: Development Unit: Bk | |

| | | | |
|---|---|---|---|
| 007 | Page: Development Unit: M | | |
| 008 | Page: Development Unit: C | | |
| 009 | Page: Development Unit: Y | | |
| 010 | Page: Developer: Bk | | |
| 011 | Page: Developer: M | | |
| 012 | Page: Developer: C | | |
| 013 | Page: Developer: Y | | |
| 014 | Page: Image Transfer | | |
| 015 | Page: Cleaning Unit | | |
| 016 | Page: Fusing Unit | | |
| 017 | Page: Paper Transfer Unit | | |
| 018 | Page: Toner Collection Bottle | | |
| | Displays the number of revolutions of motors or clutches for each current maintenance unit.<br>[ 0 to 9999999 / **0** / 1 revolution/step ]<br>When a unit is replaced, the machine automatically detects that the new unit is installed. Then, the current PM counter value is automatically moved to the PM Counter - Previous (SP7-906-11 to 20) and is reset to “0”. The total number of revolutions made with the last unit replaced can be checked with SP7-906-11 to 20. | | |
| 031 | Rotation: PCU: Bk | *ENG | [0 to 999999999 / - / 1 mm/step ] |
| 032 | Rotation: PCU: M | | |
| 033 | Rotation: PCU: C | | |
| 034 | Rotation: PCU: Y | | |

| | | | |
|---|---|---|---|
| 035 | Rotation: Development Unit: Bk | | |
| 036 | Rotation: Development Unit: M | | |
| 037 | Rotation: Development Unit: C | | |
| 038 | Rotation: Development Unit: Y | | |
| 039 | Rotation: Developer: Bk | | |
| 040 | Rotation: Developer: M | | |
| 041 | Rotation: Developer: C | | |
| 042 | Rotation: Developer: Y | | |
| 043 | Rotation: Image Transfer Belt | | |
| 044 | Rotation: Cleaning Unit | | |
| 045 | Rotation: Fusing Unit | | |
| 046 | Rotation: Paper Transfer Unit | | |
| 047 | Measurement: Toner Collection bottle | | |
| | Displays the value given by the following formula:<br>(Current revolution ÷ Target revolution) × 100. This shows how much of the unit's expected lifetime has been used up.<br>The Rotation% counter is based on rotations, not prints. If the number of rotations reaches the limit, the machine enters the end condition for that unit. If the print count lifetime is reached first, the machine also enters the end condition, even though the R% counter is still less than 100%. | | |
| 061 | Rotation (%): PCU: Bk | *ENG | [0 to 255 / - / 1 %/step] |
| 062 | Rotation (%): PCU: M | | |
| 063 | Rotation (%): PCU: C | | |

| | | | |
|---|---|---|---|
| 064 | Rotation (%): PCU: Y | | |
| 065 | Rotation (%): Development Unit: Bk | | |
| 066 | Rotation (%): Development Unit: M | | |
| 067 | Rotation (%): Development Unit: C | | |
| 068 | Rotation (%): Development Unit: Y | | |
| 069 | Rotation (%): Developer: Bk | | |
| 070 | Rotation (%): Developer: M | | |
| 071 | Rotation (%): Developer: C | | |
| 072 | Rotation (%): Developer: Y | | |
| 073 | Rotation (%): Image Transfer | | |
| 074 | Rotation (%): Cleaning Unit | | |
| 075 | Rotation (%): Fusing Unit | | |
| 076 | Rotation (%): Paper Transfer Unit | | |
| 077 | Measurement (%): Toner Collection bottle | | |
| | Displays the value given by the following formula:<br>(Current printouts ÷ Target printouts) × 100. This shows how much of the unit's expected lifetime has been used up.<br>The Page% counter is based on printouts, not revolutions. If the number of printouts reaches the limit, the machine enters the end condition for that unit. If the revolution count lifetime is reached first, the machine also enters the end condition, even though the Page% counter is still less than 100%. | | |
| 091 | Page (%): PCU: Bk | *ENG | [0 to 255 / - / 1 %/step] |

| | | | |
|---|---|---|---|
| 092 | Page (%): PCU: M | | |
| 093 | Page (%): PCU: C | | |
| 094 | Page (%): PCU: Y | | |
| 095 | Page (%): Development Unit: Bk | | |
| 96 | Page (%): Development Unit: M | | |
| 97 | Page (%): Development Unit: C | | |
| 98 | Page (%): Development Unit: Y | | |
| 99 | Page (%): Developer: Bk | | |
| 100 | Page (%): Developer: M | | |
| 101 | Page (%): Developer: C | | |
| 102 | Page (%): Developer: Y | | |
| 103 | Page (%): Image Transfer | | |
| 104 | Page (%): Cleaning Unit | | |
| 105 | Page (%): Fusing Unit | | |
| 106 | Page (%): Paper Transfer Unit | | |

| | | | |
|---|---|---|---|
| **7804** | **[PM Counter Reset]** PM Counter Clear | | |
| | (Unit, [Color]) | | |
| | Clears the PM counter.<br>Press the Enter key after the machine asks “Execute?”, which will store the PM counter value in SP7-906 (PM Counter - Previous) and reset the value of the current PM counter (SP7-803) to “0”. | | |
| 002 | PCU: K | | |

| | | | |
|---|---|---|---|
| 003 | PCU: M | | |
| 004 | PCU: C | | |
| 005 | PCU: Y | | |
| 006 | PCU: All | | |
| 007 | Development Unit: Bk | | |
| 008 | Development Unit: M | | |
| 009 | Development Unit: C | | |
| 010 | Development Unit: Y | | |
| 011 | Development Unit: All | | |
| 012 | Developer: Bk | | |
| 013 | Developer: M | | |
| 014 | Developer: C | | |
| 015 | Developer: Y | | |
| 016 | Developer: All | | |
| 017 | Image Transfer Belt | | |
| 018 | Cleaning Unit | | |
| 019 | Fusing Unit | | |
| 020 | Paper Transfer Unit | | |
| 021 | Toner Collection Bottle | | |
| 0100 | All | | |

| | | | |
|---|---|---|---|
| **7807** | **[SC/Jam Counter Reset]** | | |
| | Clears the counters related to SC codes and paper jams. | | |
| 001 | SC/Jam Clear | - | - |

| | |
|---|---|
| **7826** | **[MF Error Counter] Japan Only** |
| 001 | Error Total |
| 002 | Error Staple |

| | |
|---|---|
| **7827** | **[MF Error Counter Clear] Japan Only** |

| | | | |
|---|---|---|---|
| **7832** | **[Self-Diagnose Result Display]** | | |
| | Displays the result of the diagnostics. | | |
| 001 | Diag. Result | *CTL | - |

| | |
|---|---|
| **7836** | **Total Memory Size** |
| | Displays the memory capacity of the controller system. |

| | | | |
|---|---|---|---|
| **7852** | **[DF Scan Glass Dust Check Counter]** | | |
| | Counts the number of occurrences (0 to 65,535) when dust was detected on the scanning glass of the ADF or resets the dust detection counter. Counting is done only if SP4-020-1 (ADF Scan Glass Dust Check) is switched on. | | |
| 001 | Dust Detection Counter | *CTL | [0 to 9999 / - / 1 /step] |
| 002 | Dust Detection Clear Counter | *CTL | [0 to 9999 / - / 1 /step] |

| 7853 | [Replacement Counter] | | |
|---|---|---|---|
| | Displays the PM parts replacement number. | | |
| 001 | PCU: Bk | *CTL | [0 to 255 / - / 1 /step] |
| 002 | PCU: M | *CTL | |
| 003 | PCU: C | *CTL | |
| 004 | PCU: Y | *CTL | |
| 005 | Development Unit: Bk | *CTL | |
| 006 | Development Unit: M | *CTL | |
| 007 | Development Unit: C | *CTL | |
| 008 | Development Unit: Y | *CTL | |
| 009 | Developer: Bk | *CTL | |
| 010 | Developer: M | *CTL | |
| 011 | Developer: C | *CTL | |
| 012 | Developer: Y | *CTL | |
| 013 | Image Transfer | *CTL | |
| 014 | Cleaning Unit | *CTL | |
| 015 | Fusing Unit | *CTL | |
| 016 | Paper Transfer Unit | *CTL | |
| 017 | Toner Collection Bottle | *CTL | |

| | | | |
|---|---|---|---|
| **7855** | **[Coverage Range]** | | |
| | Sets the color coverage threshold.<br>Coverage rate = Coverage per page / A4 full coverage (dots) x 100<br>There are three coverage counters: Color 1, Color 2, and Color 3<br>▪ [A] 5% (default) is adjustable with SP7855-001.<br>▪ [B] 20% (default) is adjustable with SP7855-002.<br> <br><br>Note<br>▪ The setting value [B] must be set larger than [A].<br>The total numbers of printouts (BW printing plus color printing) for each coverage range are displayed with the following SPs.<br>▪ Color1 counter: SP8601-021<br>▪ Color2 counter: SP8601-022<br>▪ Color3 counter: SP8601-023 | | |
| 001 | Coverage Range 1 | *CTL | [1 to 200 / **5** /1] |
| 002 | Coverage Range 2 | *CTL | [1 to 200 / **20** /1] |

| | | | |
|---|---|---|---|
| **7901** | **[Assert Info]** | | |
| | Records the location where a problem is detected in the program. The data stored in this SP is used for problem analysis. **DFU** | | |
| 001 | File Name | *CTL | - |
| 002 | Number of Lines | | |
| 003 | Location | | |

| | | | |
|---|---|---|---|
| **7906** | **[Prev. Unit PM Counter]** | | |
| | (Page or Rotations, Unit, [Color]), Dev.: Development Unit | | |
| | Displays the number of sheets printed with the previous maintenance units. | | |
| 001 | Page: PCU: Bk | *ENG | [0 to 9999999 / **0** / 1 page/step ] |
| 002 | Page: PCU: M | | |
| 003 | Page: PCU: C | | |
| 004 | Page: PCU: Y | | |
| 005 | Page: Development Unit: Bk | | |
| 006 | Page: Development Unit: M | | |
| 007 | Page: Development Unit: C | | |
| 008 | Page: Development Unit: Y | | |
| 009 | Page: Developer: Bk | | |
| 010 | Page: Developer: M | | |
| 011 | Page: Developer: C | | |
| 012 | Page: Developer: Y | | |
| 013 | Page: Image Transfer | | |
| 014 | Page: Cleaning Unit | | |
| 015 | Page: Fusing Unit | | |
| 016 | Page: Paper Transfer Unit | | |
| 017 | Page: Toner Collection Bottle | | |
| | Displays the number of revolutions for motors or clutches in the previous maintenance units. | | |

| | | | |
|---|---|---|---|
| 031 | Rotation: PCU: Bk | *ENG | [0 to 9999999 / **0** / 1 mm/step ] |
| 032 | Rotation: PCU: M | | |
| 033 | Rotation: PCU: C | | |
| 034 | Rotation: PCU: Y | | |
| 035 | Rotation: Development Unit: Bk | | |
| 036 | Rotation: Development Unit: M | | |
| 037 | Rotation: Development Unit: C | | |
| 038 | Rotation: Development Unit: Y | | |
| 039 | Rotation: Developer: Bk | | |
| 040 | Rotation: Developer: M | | |
| 041 | Rotation: Developer: C | | |
| 042 | Rotation: Developer: Y | | |
| 043 | Rotation: Image Transfer Belt | | |
| 044 | Rotation: Cleaning Unit | | |
| 045 | Rotation: Fusing Unit | | |
| 046 | Rotation: Paper Transfer Unit | | |
| 047 | Measurement: Toner Collection bottle | | |
| | Displays the number of sheets printed with the previous maintenance unit or toner cartridge. | | |

| | | | |
|---|---|---|---|
| 061 | Rotation (%): PCU: Bk | *ENG | [0 to 255 / **0** / 1 %/step ] |
| 062 | Rotation (%): PCU: M | | |
| 063 | Rotation (%): PCU: C | | |
| 064 | Rotation (%): PCU: Y | | |
| 065 | Rotation (%): Development Unit: Bk | | |
| 066 | Rotation (%): Development Unit: M | | |
| 067 | Rotation (%): Development Unit: C | | |
| 068 | Rotation (%): Development Unit: Y | | |
| 069 | Rotation (%): Developer: Bk | | |
| 070 | Rotation (%): Developer: M | | |
| 071 | Rotation (%): Developer: C | | |
| 072 | Rotation (%): Developer: Y | | |
| 073 | Rotation (%): Image Transfer | | |
| 074 | Rotation (%): Cleaning Unit | | |
| 075 | Rotation (%): Fusing Unit | | |
| 076 | Rotation (%): Paper Transfer Unit | | |
| 077 | Measurement (%): Toner Collection bottle | | |

| | | | |
|---|---|---|---|
| | Displays the value given by the following formula:<br>(Current count ÷ Yield count) x 100, where “Current count” is the current values in the counter for the part, and “Yield count” is the recommended yield. | | |
| 091 | Page (%): PCU: Bk | *ENG | [0 to 255 / **0** / 1 %/step ] |
| 092 | Page (%): PCU: M | | |
| 093 | Page (%): PCU: C | | |
| 094 | Page (%): PCU: Y | | |
| 095 | Page (%): Development Unit: Bk | | |
| 96 | Page (%): Development Unit: M | | |
| 97 | Page (%): Development Unit: C | | |
| 98 | Page (%): Development Unit: Y | | |
| 99 | Page (%): Developer: Bk | | |
| 100 | Page (%): Developer: M | | |
| 101 | Page (%): Developer: C | | |
| 102 | Page (%): Developer: Y | | |
| 103 | Page (%): Image Transfer | | |
| 104 | Page (%): Cleaning Unit | | |
| 105 | Page (%): Fusing Unit | | |
| 106 | Page (%): Paper Transfer Unit | | |

| | | | |
|---|---|---|---|
| **7931** | **[Toner Bottle Bk]** | | |
| | Displays the toner bottle information for Bk. | | |
| 001 | Machine Serial ID | *ENG | |
| 002 | Cartridge Ver | | |
| 003 | Brand ID | | |
| 004 | Area ID | | |
| 005 | Product ID | | |
| 006 | Color ID | | |
| 007 | Maintenance ID | | |
| 008 | New Product Information | | |
| 009 | Recycle Counter | | |
| 010 | Date | | |
| 011 | Serial No. | | |
| 012 | Toner Remaining | | |
| 013 | EDP Code | | |
| 014 | End History | | |
| 015 | Refill Information | | |
| 016 | Attachment: Total Counter | | |
| 017 | Attachment: Color Counter | | |
| 018 | End: Total Counter | | |
| 019 | End: Color Counter | | |
| 020 | Attachment Date | | |

| | | | |
|---|---|---|---|
| 021 | End Date | | |

| | | | |
|---|---|---|---|
| **7932** | **[Toner Bottle M]** | | |
| | Displays the toner bottle information for M. | | |
| 001 | Machine Serial ID | *ENG | |
| 002 | Cartridge Ver | | |
| 003 | Brand ID | | |
| 004 | Area ID | | |
| 005 | Product ID | | |
| 006 | Color ID | | |
| 007 | Maintenance ID | | |
| 008 | New Product Information | | |
| 009 | Recycle Counter | | |
| 010 | Date | | |
| 011 | Serial No. | | |
| 012 | Toner Remaining | | |
| 013 | EDP Code | | |
| 014 | End History | | |
| 015 | Refill Information | | |
| 016 | Attachment: Total Counter | | |
| 017 | Attachment: Color Counter | | |
| 018 | End: Total Counter | | |

| | | | |
|---|---|---|---|
| 019 | End: Color Counter | | |
| 020 | Attachment Date | | |
| 021 | End Date | | |

| | | | |
|---|---|---|---|
| **7933** | **[Toner Bottle C]** | | |
| | Displays the toner bottle information for C. | | |
| 001 | Machine Serial ID | *ENG | |
| 002 | Cartridge Ver | | |
| 003 | Brand ID | | |
| 004 | Area ID | | |
| 005 | Product ID | | |
| 006 | Color ID | | |
| 007 | Maintenance ID | | |
| 008 | New Product Information | | |
| 009 | Recycle Counter | | |
| 010 | Date | | |
| 011 | Serial No. | | |
| 012 | Toner Remaining | | |
| 013 | EDP Code | | |
| 014 | End History | | |
| 015 | Refill Information | | |

| | | | |
|---|---|---|---|
| 016 | Attachment: Total Counter | | |
| 017 | Attachment: Color Counter | | |
| 018 | End: Total Counter | | |
| 019 | End: Color Counter | | |
| 020 | Attachment Date | | |
| 021 | End Date | | |

| | | | |
|---|---|---|---|
| **7934** | **[Toner Bottle Y]** | | |
| | Displays the toner bottle information for Y. | | |
| 001 | Machine Serial ID | *ENG | |
| 002 | Cartridge Ver | | |
| 003 | Brand ID | | |
| 004 | Area ID | | |
| 005 | Product ID | | |
| 006 | Color ID | | |
| 007 | Maintenance ID | | |
| 008 | New Product Information | | |
| 009 | Recycle Counter | | |
| 010 | Date | | |
| 011 | Serial No. | | |
| 012 | Toner Remaining | | |

| | | | |
|---|---|---|---|
| 013 | EDP Code | | |
| 014 | End History | | |
| 015 | Refill Information | | |
| 016 | Attachment: Total Counter | | |
| 017 | Attachment: Color Counter | | |
| 018 | End: Total Counter | | |
| 019 | End: Color Counter | | |
| 020 | Attachment Date | | |
| 021 | End Date | | |

| **7935** | **[Toner Bottle Log 1/2/3/4/5: Bk]** | | |
|---|---|---|---|
| 001 | Serial No. | *ENG | Displays the toner bottle information log 1 for Bk. |
| 002 | Attachment Date | | |
| 003 | Attachment: Total Counter | | |
| 004 | Refill Information | | |
| 011 | Serial No. | *ENG | Displays the toner bottle information log 2 for Bk. |
| 012 | Attachment Date | | |
| 013 | Attachment: Total Counter | | |
| 014 | Refill Information | | |
| 021 | Serial No. | *ENG | Displays the toner bottle information log 3 for Bk. |

| | | | |
|---|---|---|---|
| 022 | Attachment Date | | |
| 023 | Attachment: Total Counter | | |
| 024 | Refill Information | | |
| 031 | Serial No. | *ENG | Displays the toner bottle information log 4 for Bk. |
| 032 | Attachment Date | | |
| 033 | Attachment: Total Counter | | |
| 034 | Refill Information | | |
| 041 | Serial No. | *ENG | Displays the toner bottle information log 5 for Bk. |
| 042 | Attachment Date | | |
| 043 | Attachment: Total Counter | | |
| 044 | Refill Information | | |

| **7936** | **[Toner Bottle Log 1/2/3/4/5: M]** | | |
|---|---|---|---|
| 001 | Serial No. | *ENG | Displays the toner bottle information log 1 for M. |
| 002 | Attachment Date | | |
| 003 | Attachment: Total Counter | | |
| 004 | Refill Information | | |

| | | | |
|---|---|---|---|
| 011 | Serial No. | *ENG | Displays the toner bottle information log 2 for M. |
| 012 | Attachment Date | | |
| 013 | Attachment: Total Counter | | |
| 014 | Refill Information | | |
| 021 | Serial No. | *ENG | Displays the toner bottle information log 3 for M. |
| 022 | Attachment Date | | |
| 023 | Attachment: Total Counter | | |
| 024 | Refill Information | | |
| 031 | Serial No. | *ENG | Displays the toner bottle information log 4 for M. |
| 032 | Attachment Date | | |
| 033 | Attachment: Total Counter | | |
| 034 | Refill Information | | |
| 041 | Serial No. | *ENG | Displays the toner bottle information log 5 for M. |
| 042 | Attachment Date | | |
| 043 | Attachment: Total Counter | | |
| 044 | Refill Information | | |

| 7937 | [Toner Bottle Log 1/2/3/4/5: C] | | |
|---|---|---|---|
| 001 | Serial No. | *ENG | Displays the toner bottle information log 1 for C. |
| 002 | Attachment Date | | |
| 003 | Attachment: Total Counter | | |
| 004 | Refill Information | | |
| 011 | Serial No. | *ENG | Displays the toner bottle information log 2 for C. |
| 012 | Attachment Date | | |
| 013 | Attachment: Total Counter | | |
| 014 | Refill Information | | |
| 021 | Serial No. | *ENG | Displays the toner bottle information log 3 for C. |
| 022 | Attachment Date | | |
| 023 | Attachment: Total Counter | | |
| 024 | Refill Information | | |
| 031 | Serial No. | *ENG | Displays the toner bottle information log 4 for C. |
| 032 | Attachment Date | | |
| 033 | Attachment: Total Counter | | |
| 034 | Refill Information | | |

| | | | |
|---|---|---|---|
| 041 | Serial No. | *ENG | Displays the toner bottle information log 5 for C. |
| 042 | Attachment Date | | |
| 043 | Attachment: Total Counter | | |
| 044 | Refill Information | | |

| **7938** | **[Toner Bottle Log 1/2/3/4/5: Y]** | | |
|---|---|---|---|
| 001 | Serial No. | *ENG | Displays the toner bottle information log 1 for Y. |
| 002 | Attachment Date | | |
| 003 | Attachment: Total Counter | | |
| 004 | Refill Information | | |
| 011 | Serial No. | *ENG | Displays the toner bottle information log 2 for Y. |
| 012 | Attachment Date | | |
| 013 | Attachment: Total Counter | | |
| 014 | Refill Information | | |
| 021 | Serial No. | *ENG | Displays the toner bottle information log 3 for Y. |
| 022 | Attachment Date | | |
| 023 | Attachment: Total Counter | | |
| 024 | Refill Information | | |

| | | | |
|---|---|---|---|
| 031 | Serial No. | *ENG | Displays the toner bottle information log 4 for Y. |
| 032 | Attachment Date | | |
| 033 | Attachment: Total Counter | | |
| 034 | Refill Information | | |
| 041 | Serial No. | *ENG | Displays the toner bottle information log 5 for Y. |
| 042 | Attachment Date | | |
| 043 | Attachment: Total Counter | | |
| 044 | Refill Information | | |

| | | | |
|---|---|---|---|
| **7950** | **[Unit Replacement Date]** | | |
| | Displays the replacement date of each PM unit. | | |
| 001 | Image Transfer Belt | *ENG | |
| 002 | Cleaning Unit | | |
| 003 | Paper Transfer Unit | | |
| 004 | Fusing Unit | | |
| 005 | Toner Collection Bottle | | |
| 006 | K PCU | | |
| 007 | M PCU | | |
| 008 | C PCU | | |
| 009 | Y PCU | | |

| | | | |
|---|---|---|---|
| **7951** | **[Remaining Day Counter]** | | |
| | Displays the remaining unit life of each PM unit. | | |
| 001 | Page: PCU: Bk | *ENG | [0 to 255 / **255** / 1 day/step] |
| 002 | Page: PCU: M | | |
| 003 | Page: PCU: C | | |
| 004 | Page: PCU: Y | | |
| 005 | Page: Development Unit: Bk | | |
| 006 | Page: Development Unit: M | | |
| 007 | Page: Development Unit: C | | |
| 008 | Page: Development Unit: Y | | |
| 009 | Page: Developer: Bk | | |
| 010 | Page: Developer: M | | |
| 011 | Page: Developer: C | | |
| 012 | Page: Developer: Y | | |
| 013 | Page: Image Transfer Belt | | |
| 014 | Page: Cleaning Unit | | |
| 015 | Page: Fusing Unit | | |
| 016 | Page: Paper Transfer Unit | | |

| | | | |
|---|---|---|---|
| 031 | Rotation: PCU: Bk | *ENG | [0 to 255 / **255** / 1 day/step] |
| 032 | Rotation: PCU: M | | |
| 033 | Rotation: PCU: C | | |
| 034 | Rotation: PCU: Y | | |
| 035 | Rotation: Development Unit: Bk | | |
| 036 | Rotation: Development Unit: M | | |
| 037 | Rotation: Development Unit: C | | |
| 038 | Rotation: Development Unit: Y | | |
| 039 | Rotation: Developer: Bk | | |
| 040 | Rotation: Developer: M | | |
| 041 | Rotation: Developer: C | | |
| 042 | Rotation: Developer: Y | | |
| 043 | Rotation: Image Transfer Belt | | |
| 044 | Rotation: Cleaning Unit | | |
| 045 | Rotation: Fusing Unit | | |
| 046 | Rotation: Paper Transfer Unit | | |
| 047 | Measurement: Toner Collection bottle | | |

| | | | |
|---|---|---|---|
| **7952** | **[PM Yield Setting]** | | |
| | Adjusts the unit yield of each PM unit. | | |
| 001 | Rotation: Image Transfer Belt | *CTL | [0 to 999999999 / **256597000** / 1 mm/step] |
| 002 | Rotation: Cleaning Unit | *CTL | [0 to 999999999 / **128299000** / 1 mm/step] |
| 003 | Rotation: Fusing Unit | *CTL | [0 to 999999999 / **155595000** / 1 mm/step] |
| 004 | Rotation: Paper Transfer Unit | *CTL | [0 to 999999999 / **192448000**/ 1 mm/step] |
| 011 | Page: Image Transfer Belt | *CTL | [0 to 999999 / **320000** / 1 sheet/step] |
| 012 | Page: Cleaning Unit | *CTL | [0 to 999999 / **160000** / 1 sheet/step] |
| 013 | Page: Fusing Unit | *CTL | [0 to 999999 / **160000** / 1 sheet/step] |
| 014 | Page: Paper Transfer Unit | *CTL | [0 to 999999 / **240000**/ 1 sheet/step] |
| 021 | Day Threshold: PCU: Bk | *CTL | Adjusts the threshold day for the near end fro each PM unit.<br>[1 to 30 / **15** / 1 day/step]<br>These threshold days are used for NRS alarms. |
| 022 | Day Threshold: PCU: M | | |
| 023 | Day Threshold: PCU: C | | |
| 024 | Day Threshold: PCU: Y | | |
| 025 | Day Threshold: Development Unit: Bk | | |
| 026 | Day Threshold: Development Unit: M | | |

| | | | |
|---|---|---|---|
| 027 | Day Threshold: Development Unit: C | | |
| 028 | Day Threshold: Development Unit: Y | | |
| 029 | Day Threshold: Developer: Bk | | |
| 030 | Day Threshold: Developer: M | | |
| 031 | Day Threshold: Developer: C | | |
| 032 | Day Threshold: Developer: Y | | |
| 033 | Day Threshold: Image Transfer Belt | | |
| 034 | Day Threshold: Cleaning Unit | | |
| 035 | Day Threshold: Fusing Unit | | |
| 036 | Day Threshold: Paper Transfer Unit] | | |
| 037 | Day Threshold: Toner Collection Botte | | |
| 038 | Rotation: PCU: Bk | | [0 to 999999999 / **0** / 1 mm/step] |
| 039 | Rotation: PCU: M | | |
| 040 | Rotation: PCU: C | | |
| 041 | Rotation: PCU: Y | | |

| | | | |
|---|---|---|---|
| 042 | Rotation: Development Unit: Bk | | [0 to 999999999 / **0** / 1 mm/step] |
| 043 | Rotation: Development Unit: M | | |
| 044 | Rotation: Development Unit: C | | |
| 045 | Rotation: Development Unit: Y | | |
| 046 | Rotation: Developer: Bk | | [0 to 999999999 / **0** / 1 mm/step] |
| 047 | Rotation: Developer: M | | |
| 048 | Rotation: Developer: C | | |
| 049 | Rotation: Developer: Y | | |
| 050 | Page: PCU: Bk | | [0 to 999999 / **0** / 1 sheet/step] |
| 051 | Page: PCU: M | | |
| 052 | Page: PCU: C | | |
| 053 | Page: PCU: Y | | |
| 054 | Page: Development Unit: Bk | | [0 to 999999 / **0** / 1 sheet/step] |
| 055 | Page: Development Unit: M | | |
| 056 | Page: Development Unit: C | | |
| 057 | Page: Development Unit: Y | | |

| | | | |
|---|---|---|---|
| 058 | Page: Developer: Bk | | [0 to 999999 / **0** / 1 sheet/step] |
| 059 | Page: Developer: M | | |
| 060 | Page: Developer: C | | |
| 061 | Page: Developer: Y | | |

| **7953** | **[Operation Env. Log: PCU: Bk]** | | |
|---|---|---|---|
| | Displays the PCU rotation distance in each specified operation environment.<br>T: Temperature (°C), H: Relative Humidity (%) | | |
| 001 | T<=5: 0<=H<30 | *CTL | [0 to 99999999 / - / 1 mm/step] |
| 002 | T<=5: 30<=H<55 | | |
| 003 | T<=5: 55<=H<80 | | |
| 004 | T<=5: 80<=H<=100 | | |
| 005 | 5<T<15: 0<=H<30 | | |
| 006 | 5<T<15: 30<=H<55 | | |
| 007 | 5<T<15: 55<=H<80 | | |
| 008 | 5<T<15: 80<=H<=100 | | |
| 009 | 15<=T<25: 0<=H<30 | | |
| 010 | 15<=T<25: 30<=H<55 | | |
| 011 | 15<=T<25: 55<=H<80 | | |
| 012 | 15<=T<25:<br>80<=H<=100 | | |
| 013 | 25<=T<30: 0<=H<30 | | |
| 014 | 25<=T<30: 30<=H<55 | | |

| | | | |
|---|---|---|---|
| 015 | 25<=T<30: 55<=H<80 | | |
| 016 | 25<=T<30:<br>80<=H<=100 | | |
| 017 | 30<=T: 0<=H<30 | | |
| 018 | 30<=T: 30<=H<55 | | |
| 019 | 30<=T: 55<=H<80 | | |
| 020 | 30<=T: 80<=H<=100 | | |

| | | | |
|---|---|---|---|
| **7954** | **[Operation Env. Log Clear]** | | |
| | Clears the operation environment log. | | |
| 001 | | | |

### *SP8-xxx: Data Log2*

Many of these counters are provided for features that are currently not available, such as sending color faxes, and so on. However, here are some Group 8 codes that when used in combination with others, can provide useful information.

| SP Numbers | What They Do |
|---|---|
| SP8 211 to SP8 216 | The number of pages scanned to the document server. |
| SP8 401 to SP8 406 | The number of pages printed from the document server |
| SP8 691 to SP8 696 | The number of pages sent from the document server |

Specifically, the following questions can be answered:

- How is the document server actually being used?
- What application is using the document server most frequently?
- What data in the document server is being reused?

Most of the SPs in this group are prefixed with a letter that indicates the mode of operation (the mode of operation is referred to as an “application”). Before reading the Group 8 Service Table, make sure that you understand what these prefixes mean.

| Prefixes | What it means | |
|---|---|---|
| T: | Total: (Grand Total). | Grand total of the items counted for all applications (C, F, P, etc.). |
| C: | Copy application. | Totals (pages, jobs, etc.) executed for each application when the job was not stored on the document server. |
| F: | Fax application. | |
| P: | Print application. | |
| S: | Scan application. | |
| L: | Local storage (document server) | Totals (jobs, pages, etc.) for the document server. The L: counters work differently case by case. Sometimes, they count jobs/pages stored on the document server; this can be in document server mode (from the document server window), or from another mode, such as from a printer driver or by pressing the Store File button in the Copy mode window. Sometimes, they include occasions when the user uses a file that is already on the document server. Each counter will be discussed case by case. |
| O: | Other applications (external network applications, for example) | Refers to network applications such as Web Image Monitor. Utilities developed with the SDK (Software Development Kit) will also be counted with this group in the future. |

The Group 8 SP codes are limited to 17 characters, forced by the necessity of displaying them on the small LCDs of printers and faxes that also use these SPs. Read over the list of abbreviations below and refer to it again if you see the name of an SP that you do not understand.

**Key for Abbreviations**

| Abbreviation | What it means |
|---|---|
| / | “By”, e.g. “T:Jobs/Apl” = Total Jobs “by” Application |
| > | More (2> “2 or more”, 4> “4 or more” |
| AddBook | Address Book |
| Apl | Application |
| B/W | Black & White |
| Bk | Black |
| C | Cyan |
| ColCr | Color Create |
| ColMode | Color Mode |
| Comb | Combine |
| Comp | Compression |
| Deliv | Delivery |
| DesApl | Designated Application. The application (Copy, Fax, Scan, Print) used to store the job on the document server, for example. |
| Dev Counter | Development Count, no. of pages developed. |
| Dup, Duplex | Duplex, printing on both sides |
| Emul | Emulation |
| FC | Full Color |
| FIN | Post-print processing, i.e. finishing (punching, stapling, etc.) |
| Full Bleed | No Margins |

| Abbreviation | What it means |
|---|---|
| GenCopy | Generation Copy Mode |
| GPC | Get Print Counter. For jobs 10 pages or less, this counter does not count up. For jobs larger than 10 pages, this counter counts up by the number that is in excess of 10 (e.g., for an 11-page job, the counter counts up 11-10 =1) |
| IFax | Internet Fax |
| ImgEdt | Image Edit performed on the original with the copier GUI, e.g. border removal, adding stamps, page numbers, etc. |
| K | Black (YMCK) |
| LS | Local Storage. Refers to the document server. |
| LSize | Large (paper) Size |
| Mag | Magnification |
| MC | One color (monochrome) |
| NRS | New Remote Service, which allows a service center to monitor machines remotely. “NRS” is used overseas, “CSS” is used in Japan. |
| Org | Original for scanning |
| OrgJam | Original Jam |
| Palm 2 | Print Job Manager/Desk Top Editor: A pair of utilities that allows print jobs to be distributed evenly among the printers on the network, and allows files to moved around, combined, and converted to different formats. |
| PC | Personal Computer |

| Abbreviation | What it means |
|---|---|
| PGS | Pages. A page is the total scanned surface of the original. Duplex pages count as two pages, and A3 simplex count as two pages if the A3/DLT counter SP is switched ON. |
| PJob | Print Jobs |
| Ppr | Paper |
| PrtJam | Printer (plotter) Jam |
| PrtPGS | Print Pages |
| R | Red (Toner Remaining). Applies to the wide format model A2 only. This machine is under development and currently not available. |
| Rez | Resolution |
| SC | Service Code (Error SC code displayed) |
| Scn | Scan |
| Sim, Simplex | Simplex, printing on 1 side. |
| S-to-Email | Scan-to-E-mail |
| SMC | SMC report printed with SP5990. All of the Group 8 counters are recorded in the SMC report. |
| Svr | Server |
| TonEnd | Toner End |
| TonSave | Toner Save |
| TXJob | Send, Transmission |
| YMC | Yellow, Magenta, Cyan |
| YMCK | Yellow, Magenta, Cyan, Black |

Note

- All of the Group 8 SPs are reset with SP5 801 1 Memory All Clear.

| | | | |
|---|---|---|---|
| **8 001** | T:Total Jobs | *CTL | These SPs count the number of times each application is used to do a job.<br>[0 to 9999999/ **0** / 1]<br>**Note**: The L: counter is the total number of times the other applications are used to send a job to the document server, plus the number of times a file already on the document server is used. |
| **8 002** | C:Total Jobs | *CTL | |
| **8 003** | F:Total Jobs | *CTL | |
| **8 004** | P:Total Jobs | *CTL | |
| **8 005** | S:Total Jobs | *CTL | |
| **8 006** | L:Total Jobs | *CTL | |

- These SPs reveal the number of times an application is used, not the number of pages processed.
- When an application is opened for image input or output, this counts as one job.
- Interrupted jobs (paper jams, etc.) are counted, even though they do not finish.
- Only jobs executed by the customer are counted. Jobs executed by the customer engineer using the SP modes are not counted.
- When using secure printing (when a password is required to start the print job), the job is counted at the time when either “Delete Data” or “Specify Output” is specified.
- A job is counted as a fax job when the job is stored for sending.
- When a fax is received to fax memory, the F: counter increments but the L: counter does not (the document server is not used).
- A fax broadcast counts as one job for the F: counter (the fax destinations in the broadcast are not counted separately).
- A fax broadcast is counted only after all the faxes have been sent to their destinations. If one transmission generates an error, then the broadcast will not be counted until the transmission has been completed.
- A printed fax report counts as one job for the F: counter.
- The F: counter does not distinguish between fax sending or receiving.
- When a copy job on the document server is printed, SP8022 also increments, and when a print job stored on the document server is printed, SP8024 also increments.

- When an original is both copied and stored on the document server, the C: and L: counters both increment.
- When a print job is stored on the document server, only the L: counter increments.
- When the user presses the Document Server button to store the job on the document server, only the L: counter increments.
- When the user enters document server mode and prints data stored on the document server, only the L: counter increments.
- When an image received from Palm 2 is received and stored, the L: counter increments.
- When the customer prints a report (user code list, for example), the O: counter increments. However, for fax reports and reports executed from the fax application, the F: counter increments.

| | | | |
|---|---|---|---|
| 8 011 | T:Jobs/LS | *CTL | These SPs count the number of jobs stored to the document server by each application, to reveal how local storage is being used for input.<br>[0 to 9999999/ **0** / 1]<br>The L: counter counts the number of jobs stored from within the document server mode screen at the operation panel. |
| 8 012 | C:Jobs/LS | *CTL | |
| 8 013 | F:Jobs/LS | *CTL | |
| 8 014 | P:Jobs/LS | *CTL | |
| 8 015 | S:Jobs/LS | *CTL | |
| 8 016 | L:Jobs/LS | *CTL | |
| 8 017 | O:Jobs/LS | *CTL | |

- When a scan job is sent to the document server, the S: counter increments. When you enter document server mode and then scan an original, the L: counter increments.
- When a print job is sent to the document server, the P: counter increments.
- When a network application sends data to the document server, the O: counter increments.
- When an image from Palm 2 is stored on the document server, the O: counter increments.
- When a fax is sent to the document server, the F: counter increments.

| | | | |
|---|---|---|---|
| 8 021 | T:Pjob/LS | *CTL | These SPs reveal how files printed from the document server were stored on the document server originally.<br>[0 to 9999999/ **0** / 1]<br>The L: counter counts the number of jobs stored from within the document server mode screen at the operation panel. |
| 8 022 | C:Pjob/LS | *CTL | |
| 8 023 | F:Pjob/LS | *CTL | |
| 8 024 | P:Pjob/LS | *CTL | |
| 8 025 | S:Pjob/LS | *CTL | |
| 8 026 | L:Pjob/LS | *CTL | |
| 8 027 | O:Pjob/LS | *CTL | |

- When a copy job stored on the document server is printed with another application, the C: counter increments.
- When an application like DeskTopBinder merges a copy job that was stored on the document server with a print job that was stored on the document server, the C: and P: counters both increment.
- When a job already on the document server is printed with another application, the L: counter increments.
- When a scanner job stored on the document server is printed with another application, the S: counter increments. If the original was scanned from within document server mode, then the L: counter increments.
- When images stored on the document server by a network application (including Palm 2), are printed with another application, the O: counter increments.
- When a copy job stored on the document server is printed with a network application (Web Image Monitor, for example), the C: counter increments.
- When a fax on the document server is printed, the F: counter increments.

| | | | |
|---|---|---|---|
| 8 031 | T:Pjob/DesApl | *CTL | These SPs reveal what applications were used to output documents from the document server.<br>[0 to 9999999/ **0** / 1]<br>The L: counter counts the number of jobs printed from within the document server mode screen at the operation panel. |
| 8 032 | C:Pjob/DesApl | *CTL | |
| 8 033 | F:Pjob/DesApl | *CTL | |
| 8 034 | P:Pjob/DesApl | *CTL | |
| 8 035 | S:Pjob/DesApl | *CTL | |
| 8 036 | L:Pjob/DesApl | *CTL | |
| 8 037 | O:Pjob/DesApl | *CTL | |

- When documents already stored on the document server are printed, the count for the application that started the print job is incremented.
- When the print job is started from a network application (Desk Top Binder, Web Image Monitor, etc.) the L: counter increments.

| | | | |
|---|---|---|---|
| 8 041 | T:TX Jobs/LS | *CTL | These SPs count the applications that stored files on the document server that were later accessed for transmission over the telephone line or over a network (attached to an e-mail, or as a fax image by I-Fax).<br>[0 to 9999999/ **0** / 1]<br>**Note**: Jobs merged for sending are counted separately.<br>The L: counter counts the number of jobs scanned from within the document server mode screen at the operation panel. |
| 8 042 | C:TX Jobs/LS | *CTL | |
| 8 043 | F:TX Jobs/LS | *CTL | |
| 8 044 | P:TX Jobs/LS | *CTL | |
| 8 045 | S:TX Jobs/LS | *CTL | |
| 8 046 | L:TX Jobs/LS | *CTL | |
| 8 047 | O:TX Jobs/LS | *CTL | |

- When a stored copy job is sent from the document server, the C: counter increments.
- When images stored on the document server by a network application or Palm2 are sent as an e-mail, the O: counter increments.

| | | | |
|---|---|---|---|
| 8 051 | T:TX Jobs/DesApl | *CTL | These SPs count the applications used to send files from the document server over the telephone line or over a network (attached to an e-mail, or as a fax image by I-Fax). Jobs merged for sending are counted separately.<br>[0 to 9999999/ **0** / 1]<br>The L: counter counts the number of jobs sent from within the document server mode screen at the operation panel. |
| 8 052 | C:TX Jobs/DesApl | *CTL | |
| 8 053 | F:TX Jobs/DesApl | *CTL | |
| 8 054 | P:TX Jobs/DesApl | *CTL | |
| 8 055 | S:TX Jobs/DesApl | *CTL | |
| 8 056 | L:TX Jobs/DesApl | *CTL | |
| 8 057 | O:TX Jobs/DesApl | *CTL | |

- If the send is started from Desk Top Binder or Web Image Monitor, for example, then the O: counter increments.

| | | | |
|---|---|---|---|
| 8 061 | T:FIN Jobs | *CTL | [0 to 9999999/ **0** / 1] |
| | These SPs total the finishing methods. The finishing method is specified by the application. | | |
| 8 062 | C:FIN Jobs | *CTL | [0 to 9999999/ **0** / 1] |
| | These SPs total finishing methods for copy jobs only. The finishing method is specified by the application. | | |
| 8 063 | F:FIN Jobs | *CTL | [0 to 9999999/ **0** / 1] |
| | These SPs total finishing methods for fax jobs only. The finishing method is specified by the application.<br>**Note**: Finishing features for fax jobs are not available at this time. | | |
| 8 064 | P:FIN Jobs | *CTL | [0 to 9999999/ **0** / 1] |
| | These SPs total finishing methods for print jobs only. The finishing method is specified by the application. | | |

| | | | |
|---|---|---|---|
| 8 065 | S:FIN Jobs | *CTL | [0 to 9999999/ **0** / 1] |
| | These SPs total finishing methods for scan jobs only. The finishing method is specified by the application.<br>**Note**: Finishing features for scan jobs are not available at this time. | | |
| 8 066 | L:FIN Jobs | *CTL | [0 to 9999999/ **0** / 1] |
| | These SPs total finishing methods for jobs output from within the document server mode screen at the operation panel. The finishing method is specified from the print window within document server mode. | | |
| 8 067 | O:FIN Jobs | *CTL | [0 to 9999999/ **0** / 1] |
| | These SPs total finishing methods for jobs executed by an external application, over the network. The finishing method is specified by the application. | | |
| 8 06x 1 | Sort | Number of jobs started in Sort mode. When a stored copy job is set for Sort and then stored on the document server, the L: counter increments. (See SP8 066 1) | |
| 8 06x 2 | Stack | Number of jobs started out of Sort mode. | |
| 8 06x 3 | Staple | Number of jobs started in Staple mode. | |
| 8 06x 4 | Booklet | Number of jobs started in Booklet mode. If the machine is in staple mode, the Staple counter also increments. | |
| 8 06x 5 | Z-Fold | Number of jobs started In any mode other than the Booklet mode and set for folding (Z-fold). | |
| 8 06x 6 | Punch | Number of jobs started in Punch mode. When Punch is set for a print job, the P: counter increments. (See SP8 064 6.) | |
| 8 06x 7 | Other | Reserved. Not used. | |

| | | | |
|---|---|---|---|
| 8 071 | T:Jobs/PGS | *CTL | [0 to 9999999/ **0** / 1] |
| | These SPs count the number of jobs broken down by the number of pages in the job, regardless of which application was used. | | |
| 8 072 | C:Jobs/PGS | *CTL | [0 to 9999999/ **0** / 1] |
| | These SPs count and calculate the number of copy jobs by size based on the number of pages in the job. | | |
| 8 073 | F:Jobs/PGS | *CTL | [0 to 9999999/ **0** / 1] |
| | These SPs count and calculate the number of fax jobs by size based on the number of pages in the job. | | |
| 8 074 | P:Jobs/PGS | *CTL | [0 to 9999999/ **0** / 1] |
| | These SPs count and calculate the number of print jobs by size based on the number of pages in the job. | | |
| 8 075 | S:Jobs/PGS | | [0 to 9999999/ **0** / 1] |
| | These SPs count and calculate the number of scan jobs by size based on the number of pages in the job. | | |
| 8 076 | L:Jobs/PGS | *CTL | [0 to 9999999/ **0** / 1] |
| | These SPs count and calculate the number of jobs printed from within the document server mode window at the operation panel, by the number of pages in the job. | | |
| 8 077 | O:Jobs/PGS | *CTL | [0 to 9999999/ **0** / 1] |
| | These SPs count and calculate the number of “Other” application jobs (Web Image Monitor, Palm 2, etc.) by size based on the number of pages in the job. | | |

| | | | |
|---|---|---|---|
| 8 07x 1 | 1 Page | 8 07x 8 | 21 to 50 Pages |
| 8 07x 2 | 2 Pages | 8 07x 9 | 51 to 100 Pages |
| 8 07x 3 | 3 Pages | 8 07x 10 | 101 to 300 Pages |
| 8 07x 4 | 4 Pages | 8 07x 11 | 301 to 500 Pages |
| 8 07x 5 | 5 Pages | 8 07x 12 | 501 to 700 Pages |
| 8 07x 6 | 6 to 10 Pages | 8 07x 13 | 701 to 1000 Pages |
| 8 07x 7 | 11 to 20 Pages | 8 07x 14 | 1001 to Pages |

- For example: When a copy job stored on the document server is printed in document server mode, the appropriate L: counter (SP8076 0xx) increments.
- Printing a fax report counts as a job and increments the F: counter (SP 8073).
- Interrupted jobs (paper jam, etc.) are counted, even though they do not finish.
- If a job is paused and re-started, it counts as one job.
- If the finisher runs out of staples during a print and staple job, then the job is counted at the time the error occurs.
- For copy jobs (SP 8072) and scan jobs (SP 8075), the total is calculated by multiplying the number of sets of copies by the number of pages scanned. (One duplex page counts as 2.)
- The first test print and subsequent test prints to adjust settings are added to the number of pages of the copy job (SP 8072).
- When printing the first page of a job from within the document server screen, the page is counted.

| | | | |
|---|---|---|---|
| 8 111 | T:FAX TX Jobs | *CTL | [0 to 9999999/ **0** / 1] |
| | These SPs count the total number of jobs (color or black-and-white) sent by fax, either directly or using a file stored on the document server, on a telephone line.<br>**Note**: Color fax sending is not available at this time. | | |
| 8 113 | F: FAX TX Jobs | *CTL | [0 to 9999999/ **0** / 1] |
| | These SPs count the total number of jobs (color or black-and-white) sent by fax directly on a telephone line.<br>**Note**: Color fax sending is not available at this time. | | |
| 8 11x 1 | B/W | | |
| 8 11x 2 | Color | | |

- These counters count jobs, not pages.
- This SP counts fax jobs sent over a telephone line with a fax application, including documents stored on the document server.
- If the mode is changed during the job, the job will count with the mode set when the job started.
- If the same document is faxed to both a public fax line and an I-Fax at a destination where both are available, then this counter increments, and the I-Fax counter (8 12x) also increments.
- The fax job is counted when the job is scanned for sending, not when the job is sent.

| | | | |
|---|---|---|---|
| 8 121 | T:IFAX TX Jobs | *CTL | [0 to 9999999/ **0** / 1] |
| | These SPs count the total number of jobs (color or black-and-white) sent, either directly or using a file stored on the document server, as fax images using I-Fax.<br>**Note**: Color fax sending is not available at this time. | | |
| 8 123 | F: IFAX TX Jobs | *CTL | [0 to 9999999/ **0** / 1] |
| | These SPs count the number of jobs (color or black-and-white) sent (not stored on the document server), as fax images using I-Fax.<br>**Note**: Color fax sending is not available at this time. | | |
| 8 12x 1 | B/W | | |
| 8 12x 2 | Color | | |

- These counters count jobs, not pages.
- The counters for color are provided for future use; the color fax feature is not available at this time.
- The fax job is counted when the job is scanned for sending, not when the job is sent.

| | | | |
|---|---|---|---|
| 8 131 | T:S-to-Email Jobs | *CTL | [0 to 9999999/ **0** / 1] |
| | These SPs count the total number of jobs (color or black-and-white) scanned and attached to an e-mail, regardless of whether the document server was used or not. | | |
| 8 135 | S: S-to-Email Jobs | *CTL | [0 to 9999999/ **0** / 1] |
| | These SPs count the number of jobs (color or black-and-white) scanned and attached to e-mail, without storing the original on the document server. | | |
| 8 13x 1 | B/W | | |
| 8 13x 2 | Color | | |
| 8 13x 3 | ACS | | |

- These counters count jobs, not pages.
- If the job is stored on the document server, after the job is stored it is determined to be color or black-and-white then counted.
- If the job is cancelled during scanning, or if the job is cancelled while the document is waiting to be sent, the job is not counted.
- If the job is cancelled during sending, it may or may not be counted, depending on what stage of the process had been reached when the job was cancelled.
- If several jobs are combined for sending to the Scan Router, Scan-to-Email, or Scan-to-PC, or if one job is sent to more than one destination. each send is counted separately. For example, if the same document is sent by Scan-to-Email as well as Scan-to-PC, then it is counted twice (once for Scan-to-Email and once for Scan-to-PC).

| | | | |
|---|---|---|---|
| 8 141 | T:Deliv Jobs/Svr | *CTL | [0 to 9999999/ **0** / 1] |
| | These SPs count the total number of jobs (color or black-and-white) scanned and sent to a Scan Router server. | | |
| 8 145 | S: Deliv Jobs/Svr | *CTL | [0 to 9999999/ **0** / 1] |
| | These SPs count the number of jobs (color or black-and-white) scanned in scanner mode and sent to a Scan Router server. | | |
| 8 14x 1 | B/W | | |
| 8 14x 2 | Color | | |
| 8 14x 3 | ACS | | |

- These counters count jobs, not pages.
- The jobs are counted even though the arrival and reception of the jobs at the Scan Router server cannot be confirmed.
- If even one color image is mixed with black-and-white images, then the job is counted as a “Color” job.
- If the job is cancelled during scanning, or if the job is cancelled while the document is waiting to be delivered, the job is not counted.
- If the job is cancelled during sending, it may or may not be counted, depending on what stage of the process had been reached when the job was cancelled.
- Even if several files are combined for sending, the transmission counts as one job.

| | | | |
|---|---|---|---|
| 8 151 | T:Deliv Jobs/PC | *CTL | [0 to 9999999/ **0** / 1] |
| | These SPs count the total number of jobs (color or black-and-white) scanned and sent to a folder on a PC (Scan-to-PC).<br>**Note**: At the present time, 8 151 and 8 155 perform identical counts. | | |
| 8 155 | S:Deliv Jobs/PC | *CTL | [0 to 9999999/ **0** / 1] |
| | These SPs count the total number of jobs (color or black-and-white) scanned and sent with Scan-to-PC. | | |
| 8 15x 1 | B/W | | |
| 8 15x 2 | Color | | |
| 8 15x 3 | ACS | | |

- These counters count jobs, not pages.
- If the job is cancelled during scanning, it is not counted.
- If the job is cancelled while it is waiting to be sent, the job is not counted.
- If the job is cancelled during sending, it may or may not be counted, depending on what stage of the process had been reached when the job was cancelled.
- Even if several files are combined for sending, the transmission counts as one job.

| | | | |
|---|---|---|---|
| 8 161 | T:PCFAX TX Jobs | *CTL | These SPs count the number of PC Fax transmission jobs. A job is counted from when it is registered for sending, not when it is sent.<br>[0 to 9999999/ **0** / 1]<br>**Note**: At the present time, these counters perform identical counts. |
| 8 163 | F:PCFAX TX Jobs | *CTL | |

- This counts fax jobs started from a PC using a PC fax application, and sending the data out to the destination from the PC through the copier.

| | | | |
|---|---|---|---|
| 8 191 | T:Total Scan PGS | *CTL | These SPs count the pages scanned by each application that uses the scanner to scan images.<br>[0 to 9999999/ **0** / 1] |
| 8 192 | C:Total Scan PGS | *CTL | |
| 8 193 | F:Total Scan PGS | *CTL | |
| 8 195 | S:Total Scan PGS | *CTL | |
| 8 196 | L:Total Scan PGS | *CTL | |

- SP 8 191 to 8 196 count the number of scanned sides of pages, not the number of physical pages.
- These counters do not count reading user stamp data, or reading color charts to adjust color.
- Previews done with a scanner driver are not counted.
- A count is done only after all images of a job have been scanned.
- Scans made in SP mode are not counted.

**Examples**

- If 3 B5 pages and 1 A3 page are scanned with the scanner application but not stored, the S: count is 4.
- If both sides of 3 A4 sheets are copied and stored to the document server using the Store File button in the Copy mode window, the C: count is 6 and the L: count is 6.
- If both sides of 3 A4 sheets are copied but not stored, the C: count is 6.
- If you enter document server mode then scan 6 pages, the L: count is 6.

| | | | |
|---|---|---|---|
| 8 201 | T:LSize Scan PGS | *CTL | [0 to 9999999/ **0** / 1] |
| | These SPs count the total number of large pages input with the scanner for scan and copy jobs. Large size paper (A3/DLT) scanned for fax transmission are not counted.<br>**Note**: These counters are displayed in the SMC Report, and in the User Tools display. | | |
| 8 203 | F: LSize Scan PGS | *CTL | [0 to 9999999/ **0** / 1] |
| | These SPs count the total number of large pages input with the scanner for fax transmission.<br>**Note**: These counters are displayed in the SMC Report, and in the User Tools display. | | |
| 8 205 | S:LSize Scan PGS | *CTL | [0 to 9999999/ **0** / 1] |
| | These SPs count the total number of large pages input with the scanner for scan jobs only. Large size paper (A3/DLT) scanned for fax transmission are not counted.<br>**Note**: These counters are displayed in the SMC Report, and in the User Tools display. | | |

| | | | |
|---|---|---|---|
| 8 211 | T:Scan PGS/LS | *CTL | These SPs count the number of pages scanned into the document server .<br>[0 to 9999999/ **0** / 1]<br>The L: counter counts the number of pages stored from within the document server mode screen at the operation panel, and with the Store File button from within the Copy mode screen |
| 8 212 | C:Scan PGS/LS | *CTL | |
| 8 213 | F:Scan PGS/LS | *CTL | |
| 8 215 | S:Scan PGS/LS | *CTL | |
| 8 216 | L:Scan PGS/LS | *CTL | |

- Reading user stamp data is not counted.
- If a job is cancelled, the pages output as far as the cancellation are counted.
- If the scanner application scans and stores 3 B5 sheets and 1 A4 sheet, the S: count is 4.
- If pages are copied but not stored on the document server, these counters do not change.
- If both sides of 3 A4 sheets are copied and stored to the document server, the C: count is 6 and the L: count is 6.
- If you enter document server mode then scan 6 pages, the L: count is 6.

| | | | |
|---|---|---|---|
| 8 221 | ADF Org Feeds | *CTL | [0 to 9999999/ **0** / 1] |
| | These SPs count the number of pages fed through the ADF for front and back side scanning. | | |
| 8 221 1 | Front | Number of front sides fed for scanning:<br>With an ADF that can scan both sides simultaneously, the Front side count is the same as the number of pages fed for either simplex or duplex scanning.<br>With an ADF that cannot scan both sides simultaneously, the Front side count is the same as the number of pages fed for duplex front side scanning. (The front side is determined by which side the user loads face up.) | |
| 8 221 2 | Back | Number of rear sides fed for scanning:<br>With an ADF that can scan both sides simultaneously, the Back count is the same as the number of pages fed for duplex scanning.<br>With an ADF that cannot scan both sides simultaneously, the Back count is the same as the number of pages fed for duplex rear-side scanning. | |

- When 1 sheet is fed for duplex scanning the Front count is 1 and the Back count is 1.
- If a jam occurs during the job, recovery processing is not counted to avoid double counting. Also, the pages are not counted if the jam occurs before the first sheet is output.

| | | | |
|---|---|---|---|
| 8 231 | Scan PGS/Mode | *CTL | [0 to 9999999/ **0** / 1] |
| | These SPs count the number of pages scanned by each ADF mode to determine the work load on the ADF. | | |
| 8 231 1 | Large Volume | Selectable. Large copy jobs that cannot be loaded in the ADF at one time. | |
| 8 231 2 | SADF | Selectable. Feeding pages one by one through the ADF. | |
| 8 231 3 | Mixed Size | Selectable. Select “Mixed Sizes” on the operation panel. | |
| 8 231 4 | Custom Size | Selectable. Originals of non-standard size. | |
| 8 231 5 | Platen | Book mode. Raising the ADF and placing the original directly on the platen. | |

- If the scan mode is changed during the job, for example, if the user switches from ADF to Platen mode, the count is done for the last selected mode.
- The user cannot select mixed sizes or non-standard sizes with the fax application so if the original’s page sizes are mixed or non-standard, these are not counted.
- If the user selects “Mixed Sizes” for copying in the platen mode, the Mixed Size count is enabled.
- In the SADF mode if the user copies 1 page in platen mode and then copies 2 pages with SADF, the Platen count is 1 and the SADF count is 3.

| | | | |
|---|---|---|---|
| 8 241 | T:Scan PGS/Org | *CTL | [0 to 9999999/ **0** / 1] |
| | These SPs count the total number of scanned pages by original type for all jobs, regardless of which application was used. | | |
| 8 242 | C:Scan PGS/Org | *CTL | [0 to 9999999/ **0** / 1] |
| | These SPs count the number of pages scanned by original type for Copy jobs. | | |
| 8 243 | F:Scan PGS/Org | *CTL | [0 to 9999999/ **0** / 1] |
| | These SPs count the number of pages scanned by original type for Fax jobs. | | |
| 8 245 | S:Scan PGS/Org | *CTL | [0 to 9999999/ **0** / 1] |
| | These SPs count the number of pages scanned by original type for Scan jobs. | | |

| | | | |
|---|---|---|---|
| 8 246 | L:Scan PGS/Org | *CTL | [0 to 9999999/ **0** / 1] |
| | These SPs count the number of pages scanned and stored from within the document server mode screen at the operation panel, and with the Store File button from within the Copy mode screen | | |

| | **8 241** | **8 242** | **8 243** | **8 245** | **8 246** |
|---|---|---|---|---|---|
| 8 24x 1: Text | Yes | Yes | Yes | Yes | Yes |
| 8 24x 2: Text/Photo | Yes | Yes | Yes | Yes | Yes |
| 8 24x 3: Photo | Yes | Yes | Yes | Yes | Yes |
| 8 24x 4: GenCopy, Pale | Yes | Yes | No | Yes | Yes |
| 8 24x 5: Map | Yes | Yes | No | Yes | Yes |
| 8 24x 6: Normal/Detail | Yes | No | Yes | No | No |
| 8 24x 7: Fine/Super Fine | Yes | No | Yes | No | No |
| 8 24x 8: Binary | Yes | No | No | Yes | No |
| 8 24x 9: Grayscale | Yes | No | No | Yes | No |
| 8 24x 10: Color | Yes | No | No | Yes | No |
| 8 24x 11: Other | Yes | Yes | Yes | Yes | Yes |

- If the scan mode is changed during the job, for example, if the user switches from ADF to Platen mode, the count is done for the last selected mode.

| | | | |
|---|---|---|---|
| 8 251 | T:Scan PGS/ImgEdt | *CTL | These SPs show how many times Image Edit features have been selected at the operation panel for each application. Some examples of these editing features are:<br>▪ Erase> Border<br>▪ Erase> Center<br>▪ Image Repeat<br>▪ Centering<br>▪ Positive/Negative<br>[0 to 9999999/ **0** / 1]<br>Note: The count totals the number of times the edit features have been used. A detailed breakdown of exactly which features have been used is not given. |
| 8 252 | C:Scan PGS/ImgEdt | *CTL | |
| 8 254 | P:Scan PGS/ImgEdt | *CTL | |
| 8 256 | L:Scan PGS/ImgEdt | *CTL | |
| 8 257 | O:Scan PGS/ImgEdt | *CTL | |

The L: counter counts the number of pages stored from within the document server mode screen at the operation panel, and with the Store File button from within the Copy mode screen.

| | | | |
|---|---|---|---|
| 8 261 | T:Scan PGS/ColCr | *CTL | - |
| 8 262 | C:Scan PGS/ ColCr | *CTL | - |
| 8 266 | L:Scn PGS/ColCr | *CTL | - |
| 8 26x 1 | Color Conversion | These SPs show how many times color creation features have been selected at the operation panel. | |
| 8 26x 2 | Color Erase | | |
| 8 26x 3 | Background | | |
| 8 26x 4 | Other | | |

| | | | |
|---|---|---|---|
| 8 281 | T:Scan PGS/TWAIN | *CTL | These SPs count the number of pages scanned using a TWAIN driver. These counters reveal how the TWAIN driver is used for delivery functions.<br>[0 to 9999999/ **0** / 1]<br>**Note**: At the present time, these counters perform identical counts. |
| 8 285 | S:Scan PGS/TWAIN | *CTL | |

| | | | |
|---|---|---|---|
| 8 291 | T:Scan PGS/Stamp | *CTL | These SPs count the number of pages stamped with the stamp in the ADF unit.<br>[0 to 9999999/ **0** / 1]<br>The L: counter counts the number of pages stored from within the document server mode screen at the operation panel, and with the Store File button from within the Copy mode screen |
| 8 293 | F:Scan PGS/Stamp | *CTL | |
| 8 295 | S:Scan PGS/Stamp | *CTL | |
| 8 296 | L:Scan PGS/Stamp | *CTL | |

| | | | |
|---|---|---|---|
| 8 301 | T:Scan PGS/Size | *CTL | [0 to 9999999/ **0** / 1] |
| | These SPs count by size the total number of pages scanned by all applications. Use these totals to compare original page size (scanning) and output (printing) page size [SP 8-441]. | | |
| 8 302 | C:Scan PGS/Size | *CTL | [0 to 9999999/ **0** / 1] |
| | These SPs count by size the total number of pages scanned by the Copy application. Use these totals to compare original page size (scanning) and output (printing) page size [SP 8-442]. | | |
| 8 303 | F:Scan PGS/Size | *CTL | [0 to 9999999/ **0** / 1] |
| | These SPs count by size the total number of pages scanned by the Fax application. Use these totals to compare original page size (scanning) and output page size [SP 8-443]. | | |
| 8 305 | S:Scan PGS/Size | *CTL | [0 to 9999999/ **0** / 1] |
| | These SPs count by size the total number of pages scanned by the Scan application. Use these totals to compare original page size (scanning) and output page size [SP 8-445]. | | |
| 8 306 | L:Scan PGS/Size | *CTL | [0 to 9999999/ **0** / 1] |
| | These SPs count by size the total number of pages scanned and stored from within the document server mode screen at the operation panel, and with the Store File button from within the Copy mode screen. Use these totals to compare original page size (scanning) and output page size [SP 8-446]. | | |

| | | |
|---|---|---|
| 8 30x 1 | A3 | - |
| 8 30x 2 | A4 | |
| 8 30x 3 | A5 | |
| 8 30x 4 | B4 | |
| 8 30x 5 | B5 | |
| 8 30x 6 | DLT | |
| 8 30x 7 | LG | |
| 8 30x 8 | LT | |
| 8 30x 9 | HLT | |
| 8 30x 10 | Full Bleed | |
| 8 30x 254 | Other (Standard) | |
| 8 30x 255 | Other (Custom) | |

| | | | |
|---|---|---|---|
| 8 311 | T:Scan PGS/Rez | *CTL | [0 to 9999999/ **0** / 1] |
| | These SPs count by resolution setting the total number of pages scanned by applications that can specify resolution settings. | | |
| 8 315 | S: Scan PGS/Rez | *CTL | [0 to 9999999/ **0** / 1] |
| | These SPs count by resolution setting the total number of pages scanned by applications that can specify resolution settings.<br>**Note**: At the present time, SP8-311 and SP8-315 perform identical counts. | | |
| 8 31x 1 | 1200dpi < | | |
| 8 31x 2 | 600dpi to 1199dpi | | |
| 8 31x 3 | 400dpi to 599dpi | | |
| 8 31x 4 | 200dpi to 399dpi | | |
| 8 31x 5 | < 199dpi | | |

- Copy resolution settings are fixed so they are not counted.
- The Fax application does not allow finely-adjusted resolution settings so no count is done for the Fax application.

| | | | |
|---|---|---|---|
| 8 381 | T:Total PrtPGS | *CTL | These SPs count the number of pages printed by the customer. The counter for the application used for storing the pages increments.<br>[0 to 9999999/ **0** / 1]<br>The L: counter counts the number of pages stored from within the document server mode screen at the operation panel. Pages stored with the Store File button from within the Copy mode screen go to the C: counter. |
| 8 382 | C:Total PrtPGS | *CTL | |
| 8 383 | F:Total PrtPGS | *CTL | |
| 8 384 | P:Total PrtPGS | *CTL | |
| 8 385 | S:Total PrtPGS | *CTL | |
| 8 386 | L:Total PrtPGS | *CTL | |
| 8 387 | O:Total PrtPGS | *CTL | |

- When the A3/DLT double count function is switched on with SP5104, 1 A3/DLT page is counted as 2.
- When several documents are merged for a print job, the number of pages stored are counted for the application that stored them.
- These counters are used primarily to calculate charges on use of the machine, so the following pages are not counted as printed pages:
  - Blank pages in a duplex printing job.
  - Blank pages inserted as document covers, chapter title sheets, and slip sheets.
  - Reports printed to confirm counts.
  - All reports done in the service mode (service summaries, engine maintenance reports, etc.)
  - Test prints for machine image adjustment.
  - Error notification reports.
  - Partially printed pages as the result of a copier jam.

| | | | |
|---|---|---|---|
| 8 391 | LSize PrtPGS | *CTL | [0 to 9999999/ **0** / 1] |
| | These SPs count pages printed on paper sizes A3/DLT and larger.<br>**Note**: In addition to being displayed in the SMC Report, these counters are also displayed in the User Tools display on the copy machine. | | |

| | | | |
|---|---|---|---|
| 8 401 | T:PrtPGS/LS | *CTL | These SPs count the number of pages printed from the document server. The counter for the application used to print the pages is incremented.<br>The L: counter counts the number of jobs stored from within the document server mode screen at the operation panel.<br>[0 to 9999999/ **0** / 1] |
| 8 402 | C:PrtPGS/LS | *CTL | |
| 8 403 | F:PrtPGS/LS | *CTL | |
| 8 404 | P:PrtPGS/LS | *CTL | |
| 8 405 | S:PrtPGS/LS | *CTL | |
| 8 406 | L:PrtPGS/LS | *CTL | |

- Print jobs done with Web Image Monitor and Desk Top Binder are added to the L: count.
- Fax jobs done with Web Image Monitor and Desk Top Binder are added to the F: count.

| | | | |
|---|---|---|---|
| 8 411 | Prints/Duplex | *CTL | This SP counts the amount of paper (front/back counted as 1 page) used for duplex printing. Last pages printed only on one side are not counted.<br>[0 to 9999999/ **0** / 1] |

| | | | |
|---|---|---|---|
| 8 421 | T:PrtPGS/Dup Comb | *CTL | [0 to 9999999/ **0** / 1] |
| | These SPs count by binding and combine, and n-Up settings the number of pages processed for printing. This is the total for all applications. | | |
| 8 422 | C:PrtPGS/Dup Comb | *CTL | [0 to 9999999/ **0** / 1] |
| | These SPs count by binding and combine, and n-Up settings the number of pages processed for printing by the copier application. | | |
| 8 423 | F:PrtPGS/Dup Comb | *CTL | [0 to 9999999/ **0** / 1] |
| | These SPs count by binding and combine, and n-Up settings the number of pages processed for printing by the fax application. | | |
| 8 424 | P:PrtPGS/Dup Comb | *CTL | [0 to 9999999/ **0** / 1] |
| | These SPs count by binding and combine, and n-Up settings the number of pages processed for printing by the printer application. | | |
| 8 425 | S:PrtPGS/Dup Comb | *CTL | [0 to 9999999/ **0** / 1] |
| | These SPs count by binding and combine, and n-Up settings the number of pages processed for printing by the scanner application. | | |
| 8 426 | L:PrtPGS/Dup Comb | *CTL | [0 to 9999999/ **0** / 1] |
| | These SPs count by binding and combine, and n-Up settings the number of pages processed for printing from within the document server mode window at the operation panel. | | |
| 8 427 | O:PrtPGS/Dup Comb | *CTL | [0 to 9999999/ **0** / 1] |
| | These SPs count by binding and combine, and n-Up settings the number of pages processed for printing by Other applications | | |

| | | | | |
|---|---|---|---|---|
| 8 42x 1 | Simplex> Duplex | | | |
| 8 42x 2 | Duplex> Duplex | | | |
| 8 42x 3 | Book> Duplex | | | |
| 8 42x 4 | Simplex Combine | | | |
| 8 42x 5 | Duplex Combine | | | |
| 8 42x 6 | 2> | 2 pages on 1 side (2-Up) | | |
| 8 42x 7 | 4> | 4 pages on 1 side (4-Up) | | |
| 8 42x 8 | 6> | 6 pages on 1 side (6-Up) | | |
| 8 42x 9 | 8> | 8 pages on 1 side (8-Up) | | |
| 8 42x 10 | 9> | 9 pages on 1 side (9-Up) | | |
| 8 42x 11 | 16> | 16 pages on 1 side (16-Up) | | |
| 8 42x 12 | Booklet | | | |
| 8 42x 13 | Magazine | | | |

- These counts (SP8 421 to SP8 427) are especially useful for customers who need to improve their compliance with ISO standards for the reduction of paper consumption.
- Pages that are only partially printed with the n-Up functions are counted as 1 page.
- Here is a summary of how the counters work for Booklet and Magazine modes:

| Booklet | | | Magazine | |
|---|---|---|---|---|
| **Original Pages** | **Count** | | **Original Pages** | **Count** |
| 1 | 1 | | 1 | 1 |
| 2 | 2 | | 2 | 2 |
| 3 | 2 | | 3 | 2 |
| 4 | 2 | | 4 | 2 |
| 5 | 3 | | 5 | 4 |
| 6 | 4 | | 6 | 4 |
| 7 | 4 | | 7 | 4 |
| 8 | 4 | | 8 | 4 |

| | | | |
|---|---|---|---|
| 8 431 | T:PrtPGS/ImgEdt | *CTL | [0 to 9999999/ **0** / 1] |
| | These SPs count the total number of pages output with the three features below, regardless of which application was used. | | |
| 8 432 | C:PrtPGS/ImgEdt | *CTL | [0 to 9999999/ **0** / 1] |
| | These SPs count the total number of pages output with the three features below with the copy application. | | |
| 8 434 | P:PrtPGS/ImgEdt | *CTL | [0 to 9999999/ **0** / 1] |
| | These SPs count the total number of pages output with the three features below with the print application. | | |
| 8 436 | L:PrtPGS/ImgEdt | *CTL | [0 to 9999999/ **0** / 1] |
| | These SPs count the total number of pages output from within the document server mode window at the operation panel with the three features below. | | |
| 8 437 | O:PrtPGS/ImgEdt | *CTL | [0 to 9999999/ **0** / 1] |
| | These SPs count the total number of pages output with the three features below with Other applications. | | |
| 8 43x 1 | Cover/Slip Sheet | Total number of covers or slip sheets inserted. The count for a cover printed on both sides counts 2. | |
| 8 43x 2 | Series/Book | The number of pages printed in series (one side) or printed as a book with booklet right/left pagination. | |
| 8 43x 3 | User Stamp | The number of pages printed where stamps were applied, including page numbering and date stamping. | |

| | | | |
|---|---|---|---|
| 8 441 | T:PrtPGS/Ppr Size | *CTL | [0 to 9999999/ **0** / 1] |
| | These SPs count by print paper size the number of pages printed by all applications. | | |
| 8 442 | C:PrtPGS/Ppr Size | *CTL | [0 to 9999999/ **0** / 1] |
| | These SPs count by print paper size the number of pages printed by the copy application. | | |
| 8 443 | F:PrtPGS/Ppr Size | *CTL | [0 to 9999999/ **0** / 1] |
| | These SPs count by print paper size the number of pages printed by the fax application. | | |
| 8 444 | P:PrtPGS/Ppr Size | *CTL | [0 to 9999999/ **0** / 1] |
| | These SPs count by print paper size the number of pages printed by the printer application. | | |
| 8 445 | S:PrtPGS/Ppr Size | *CTL | [0 to 9999999/ **0** / 1] |
| | These SPs count by print paper size the number of pages printed by the scanner application. | | |
| 8 446 | L:PrtPGS/Ppr Size | *CTL | [0 to 9999999/ **0** / 1] |
| | These SPs count by print paper size the number of pages printed from within the document server mode window at the operation panel. | | |

| | | | |
|---|---|---|---|
| 8 447 | O:PrtPGS/Ppr Size | *CTL | [0 to 9999999/ **0** / 1] |
| | These SPs count by print paper size the number of pages printed by Other applications. | | |
| 8 44x 1 | A3 | | |
| 8 44x 2 | A4 | | |
| 8 44x 3 | A5 | | |
| 8 44x 4 | B4 | | |
| 8 44x 5 | B5 | | |
| 8 44x 6 | DLT | | |
| 8 44x 7 | LG | | |
| 8 44x 8 | LT | | |
| 8 44x 9 | HLT | | |
| 8 44x 10 | Full Bleed | | |
| 8 44x 254 | Other (Standard) | | |
| 8 44x 255 | Other (Custom) | | |

- These counters do not distinguish between LEF and SEF.

| | | | |
|---|---|---|---|
| 8 451 | PrtPGS/Ppr Tray | *CTL | [0 to 9999999/ **0** / 1] |
| | These SPs count the number of sheets fed from each paper feed station. | | |
| 8 451 1 | Bypass | Bypass Tray | |
| 8 451 2 | Tray 1 | Copier | |
| 8 451 3 | Tray 2 | Copier | |
| 8 451 4 | Tray 3 | Paper Tray Unit (Option) | |
| 8 451 5 | Tray 4 | Paper Tray Unit (Option) | |
| 8 451 6 | Tray 5 | LCT (Option) | |
| 8 451 7 | Tray 6 | Currently not used. | |
| 8 451 8 | Tray 7 | Currently not used. | |
| 8 451 9 | Tray 8 | Currently not used. | |
| 8 451 10 | Tray 9 | Currently not used. | |

| | | | |
|---|---|---|---|
| 8 461 | T:PrtPGS/Ppr Type | *CTL | [0 to 9999999/ **0** / 1] |
| | These SPs count by paper type the number pages printed by all applications.<br>▪ These counters are not the same as the PM counter. The PM counter is based on feed timing to accurately measure the service life of the feed rollers. However, these counts are based on output timing.<br>▪ Blank sheets (covers, chapter covers, slip sheets) are also counted.<br>▪ During duplex printing, pages printed on both sides count as 1, and a page printed on one side counts as 1. | | |
| 8 462 | C:PrtPGS/Ppr Type | *CTL | [0 to 9999999/ 0 / 1] |
| | These SPs count by paper type the number pages printed by the copy application. | | |
| 8 463 | F:PrtPGS/Ppr Type | *CTL | [0 to 9999999/ **0** / 1] |
| | These SPs count by paper type the number pages printed by the fax application. | | |
| 8 464 | P:PrtPGS/Ppr Type | *CTL | [0 to 9999999/ **0** / 1] |
| | These SPs count by paper type the number pages printed by the printer application. | | |

| | | | |
|---|---|---|---|
| 8 466 | L:PrtPGS/Ppr Type | *CTL | [0 to 9999999/ **0** / 1] |
| | These SPs count by paper type the number pages printed from within the document server mode window at the operation panel. | | |
| 8 46x 1 | Normal | | |
| 8 46x 2 | Recycled | | |
| 8 46x 3 | Special | | |
| 8 46x 4 | Thick | | |
| 8 46x 5 | Normal (Back) | | |
| 8 46x 6 | Thick (Back) | | |
| 8 46x 7 | OHP | | |
| 8 46x 8 | Other | | |

| | | | |
|---|---|---|---|
| **8 471** | PrtPGS/Mag | *CTL | [0 to 9999999/ **0** / 1] |
| | These SPs count by magnification rate the number of pages printed. | | |
| 8 471 1 | < 49% | | |
| 8 471 2 | 50% to 99% | | |
| 8 471 3 | 100% | | |
| 8 471 4 | 101% to 200% | | |
| 8 471 5 | 201% < | | |

- Counts are done for magnification adjusted for pages, not only on the operation panel but performed remotely with an external network application capable of performing magnification adjustment as well.
- Magnification adjustments done with printer drivers with PC applications such as Excel are also counted.
- Magnification adjustments done for adjustments after they have been stored on the document server are not counted.
- Magnification adjustments performed automatically during Auto Reduce/Enlarge copying are counted.
- The magnification rates of blank cover sheets, slip sheets, etc. are automatically assigned a rate of 100%.

| | | | |
|---|---|---|---|
| 8 481 | T:PrtPGS/TonSave | *CTL | |
| 8 484 | P:PrtPGS/TonSave | *CTL | |
| | These SPs count the number of pages printed with the Toner Save feature switched on.<br>**Note**: These SPs return the same results as this SP is limited to the Print application.<br>[0 to 9999999/ **0** / 1] | | |

| | | | |
|---|---|---|---|
| 8 491 | T:PrtPGS/Col Mode | *CTL | These SPs count the number of pages printed in the Color Mode by each application. |
| 8 492 | C:PrtPGS/Col Mode | *CTL | |
| 8 493 | F:PrtPGS/Col Mode | *CTL | |
| 8 496 | L:PrtPGS/Col Mode | *CTL | |
| 8 497 | O:PrtPGS/Col Mode | *CTL | |
| 8 49x 1 | B/W | | |
| 8 49x 2 | Single Color | | |
| 8 49x 3 | Two Color | | |
| 8 49x 4 | Full Color | | |

| | | | |
|---|---|---|---|
| 8 501 | T:PrtPGS/Col Mode | *CTL | These SPs count the number of pages printed in the Color Mode by the print application. |
| 8 504 | P:PrtPGS/Col Mode | *CTL | |
| 8 057 | O:PrtPGS/Col Mode | *CTL | |
| 8 50x 1 | B/W | | |
| 8 50x 2 | Mono Color | | |
| 8 50x 3 | Full Color | | |
| 8 50x 4 | Single Color | | |
| 8 50x 5 | Two Color | | |

| | | | | |
|---|---|---|---|---|
| 8 511 | T:PrtPGS/Emul | | *CTL | [0 to 9999999/ **0** / 1] |
| | These SPs count by printer emulation mode the total number of pages printed. | | | |
| 8 514 | P:PrtPGS/Emul | | *CTL | [0 to 9999999/ **0** / 1] |
| | These SPs count by printer emulation mode the total number of pages printed. | | | |
| 8 514 1 | RPCS | | | |
| 8 514 2 | RPDL | | | |
| 8 514 3 | PS3 | | | |
| 8 514 4 | R98 | | | |
| 8 514 5 | R16 | | | |
| 8 514 6 | GL/GL2 | | | |
| 8 514 7 | R55 | | | |
| 8 514 8 | RTIFF | | | |
| 8 514 9 | PDF | | | |
| 8 514 10 | PCL5e/5c | | | |
| 8 514 11 | PCL XL | | | |
| 8 514 12 | IPDL-C | | | |
| 8 514 13 | BM-Links | Japan Only | | |
| 8 514 14 | Other | | | |

- SP8 511 and SP8 514 return the same results as they are both limited to the Print application.
- Print jobs output to the document server are not counted.

| | | | |
|---|---|---|---|
| 8 521 | T:PrtPGS/FIN | *CTL | [0 to 9999999 / **0** / 1] |
| | These SPs count by finishing mode the total number of pages printed by all applications. | | |
| 8 522 | C:PrtPGS/FIN | *CTL | [0 to 9999999 / **0** / 1] |
| | These SPs count by finishing mode the total number of pages printed by the Copy application. | | |
| 8 523 | F:PrtPGS/FIN | *CTL | [0 to 9999999 / **0** / 1] |
| | These SPs count by finishing mode the total number of pages printed by the Fax application.<br>**NOTE**: Print finishing options for received faxes are currently not available. | | |
| 8 524 | P:PrtPGS/FIN | *CTL | [0 to 9999999 / **0** / 1] |
| | These SPs count by finishing mode the total number of pages printed by the Print application. | | |
| 8 525 | S:PrtPGS/FIN | *CTL | [0 to 9999999 / **0** / 1] |
| | These SPs count by finishing mode the total number of pages printed by the Scanner application. | | |
| 8 526 | L:PrtPGS/FIN | *CTL | [0 to 9999999 / **0** / 1] |
| | These SPs count by finishing mode the total number of pages printed from within the document server mode window at the operation panel. | | |

| | |
|---|---|
| 8 52x 1 | Sort |
| 8 52x 2 | Stack |
| 8 52x 3 | Staple |
| 8 52x 4 | Booklet |
| 8 52x 5 | Z-Fold |
| 8 52x 6 | Punch |
| 8 52x 7 | Other |

Note

- If stapling is selected for finishing and the stack is too large for stapling, the unstapled pages are still counted.
- The counts for staple finishing are based on output to the staple tray, so jam recoveries are counted.

| | | | |
|---|---|---|---|
| 8 531 | Staples | *CTL | This SP counts the amount of staples used by the machine.<br>[0 to 9999999 / **0** / 1] |

| | | | |
|---|---|---|---|
| 8 581 | T:Counter | *CTL | [0 to 9999999 / **0** / 1] |
| | These SPs count the total output broken down by color output, regardless of the application used. In addition to being displayed in the SMC Report, these counters are also displayed in the User Tools display on the copy machine. | | |
| 8 581 1 | Total | | |
| 8 581 2 | Total: Full Color | | |
| 8 581 3 | B&W/Single Color | | |
| 8 581 4 | Development: CMY | | |
| 8 581 5 | Development: K | | |
| 8 581 6 | Copy: Color | | |
| 8 581 7 | Copy: B/W | | |
| 8 581 8 | Print: Color | | |
| 8 581 9 | Print: B/W | | |
| 8 581 10 | Total: Color | | |
| 8 581 11 | Total: B/W | | |
| 8 581 12 | Full Color: A3 | | |
| 8 581 13 | Full Color: B4 JIS or Smaller | | |
| 8 581 14 | Full Color Print | | |
| 8 581 15 | Mono Color Print | | |
| 8 581 16 | Full Color GPC | | |

| | | | |
|---|---|---|---|
| 8 582 | C:Counter | *CTL | [0 to 9999999/ **0** / 1] |
| | These SPs count the total output of the copy application broken down by color output. | | |
| 8 582 1 | B/W | | |
| 8 582 2 | Single Color | | |
| 8 582 3 | Two Color | | |
| 8 582 4 | Full Color | | |

| | | | |
|---|---|---|---|
| 8 583 | F:Counter | *CTL | [0 to 9999999/ **0** / 1] |
| | These SPs count the total output of the fax application broken down by color output. | | |
| 8 583 1 | B/W | | |
| 8 583 2 | Single Color | | |

| | | | |
|---|---|---|---|
| 8 584 | P:Counter | *CTL | [0 to 9999999/ **0** / 1] |
| | These SPs count the total output of the print application broken down by color output. | | |
| 8 584 1 | B/W | | |
| 8 584 2 | Mono Color | | |
| 8 584 3 | Full Color | | |
| 8 584 4 | Single Color | | |
| 8 584 5 | Two Color | | |

| | | | |
|---|---|---|---|
| 8 586 | L:Counter | *CTL | [0 to 9999999/ **0** / 1] |
| | These SPs count the total output of the local storage broken down by color output. | | |
| 8 582 1 | B/W | | |
| 8 582 2 | Single Color | | |
| 8 582 3 | Two Color | | |
| 8 582 4 | Full Color | | |

| | | | | |
|---|---|---|---|---|
| 8 591 | O:Counter | | *CTL | [0 to 9999999/ **0** / 1] |
| | These SPs count the totals for A3/DLT paper use, number of duplex pages printed, and the number of staples used. These totals are for Other (O:) applications only. | | | |
| 8 591 1 | A3/DLT | | | |
| 8 591 2 | Duplex | | | |

| | | | |
|---|---|---|---|
| 8 601 | Coverage Counter | *CTL | [0 to 9999999/ **0** / 1] |
| | These SPs count the total coverage for each color and the total printout pages for each printing mode. | | |
| 8 601 1 | B/W | | |
| 8 601 2 | Color | | |
| 8 601 11 | B/W Printing Pages | | |
| 8 601 12 | Color Printing Pages | | |

| | | | |
|---|---|---|---|
| 8 631 | T:FAX TX PGS | *CTL | [0 to 9999999/ **0** / 1] |
| | These SPs count by color mode the number of pages sent by fax to a telephone number. | | |
| 8 633 | F:FAX TX PGS | *CTL | [0 to 9999999/ **0** / 1] |
| | These SPs count by color mode the number of pages sent by fax to a telephone number. | | |
| 8 63x 1 | B/W | | |
| 8 63x 2 | Color | | |

- If a document has color and black-and-white pages mixed, the pages are counted separately as B/W or Color.
- At the present time, this feature is provided for the Fax application only so SP8631 and SP8633 are the same.
- The counts include error pages.
- If a document is sent to more than one destination with a Group transmission, the count is done for each destination.
- Polling transmissions are counted but polling RX are not.
- Relay, memory, and confidential mailbox transmissions and are counted for each destination.

| | | | |
|---|---|---|---|
| 8 641 | T:IFAX TX PGS | *CTL | [0 to 9999999/ **0** / 1] |
| | These SPs count by color mode the number of pages sent by fax to as fax images using I-Fax. | | |
| 8 643 | F:IFAX TX PGS | *CTL | [0 to 9999999/ **0** / 1] |
| | These SPs count by color mode the number of pages sent by Fax as fax images using I-Fax. | | |
| 8 64x 1 | B/W | | |
| 8 64x 2 | Color | | |

- If a document has color and black-and-white pages mixed, the pages are counted separately as B/W or Color.
- At the present time, this feature is provided for the Fax application only so SP8641 and SP8643 are the same.
- The counts include error pages.
- If a document is sent to more than one destination with a Group transmission, the count is done for each destination.
- Polling transmissions are counted but polling RX are not.
- Relay, memory, and confidential mailbox transmissions and are counted for each destination.

| | | | |
|---|---|---|---|
| 8 651 | T:S-to-Email PGS | *CTL | [0 to 9999999/ **0** / 1] |
| | These SPs count by color mode the total number of pages attached to an e-mail for both the Scan and document server applications. | | |
| 8 655 | S-to-Email PGS | *CTL | [0 to 9999999/ **0** / 1] |
| | These SPs count by color mode the total number of pages attached to an e-mail for the Scan application only. | | |
| 8 65x 1 | B/W | | |
| 8 65x 2 | Color | | |

Note

- The count for B/W and Color pages is done after the document is stored on the HDD. If the job is cancelled before it is stored, the pages are not counted.
- If Scan-to-Email is used to send a 10-page document to 5 addresses, the count is 10 (the pages are sent to the same SMTP server together).
- If Scan-to-PC is used to send a 10-page document to 5 folders, the count is 50 (the document is sent to each destination of the SMB/FTP server).
- Due to restrictions on some devices, if Scan-to-Email is used to send a 10-page document to a large number of destinations, the count may be divided and counted separately. For example, if a 10-page document is sent to 200 addresses, the count is 10 for the first 100 destinations and the count is also 10 for the second 100 destinations, for a total of 20.).

| | | | |
|---|---|---|---|
| 8 661 | T:Deliv PGS/Svr | *CTL | [0 to 9999999/ **0** / 1] |
| | These SPs count by color mode the total number of pages sent to a Scan Router server by both Scan and LS applications. | | |
| 8 665 | Deliv PGS/Svr | *CTL | [0 to 9999999/ **0** / 1] |
| | These SPs count by color mode the total number of pages sent to a Scan Router server by the Scan application. | | |
| 8 66x 1 | B/W | | |
| 8 66x 2 | Color | | |

Note

- The B/W and Color counts are done after the document is stored on the HDD of the Scan Router server.
- If the job is canceled before storage on the Scan Router server finishes, the counts are not done.
- The count is executed even if regardless of confirmation of the arrival at the Scan Router server.

| | | | |
|---|---|---|---|
| 8 671 | T:Deliv PGS/PC | *CTL | [0 to 9999999/ **0** / 1] |
| | These SPs count by color mode the total number of pages sent to a folder on a PC (Scan-to-PC) with the Scan and LS applications. | | |
| 8 675 | Deliv PGS/PC | *CTL | [0 to 9999999/ **0** / 1] |
| | These SPs count by color mode the total number of pages sent with Scan-to-PC with the Scan application. | | |
| 8 67x 1 | B/W | | |
| 8 67x 2 | Color | | |

| | | | |
|---|---|---|---|
| 8 681 | T:PCFAX TXPGS | *CTL | These SPs count the number of pages sent by PC Fax. These SPs are provided for the Fax application only, so the counts for SP8 681 and SP8 683 are the same.<br>[0 to 9999999/ **0** / 1] |
| 8 683 | F:PCFAX TXPGS | *CTL | |

- This counts pages sent from a PC using a PC fax application, from the PC through the copier to the destination.
- When sending the same message to more than one place using broadcasting, the pages are only counted once. (For example, a 10-page fax is sent to location A and location B. The counter goes up by 10, not 20.)

| | | | |
|---|---|---|---|
| 8 691 | T:TX PGS/LS | *CTL | These SPs count the number of pages sent from the document server. The counter for the application that was used to store the pages is incremented.<br>[0 to 9999999/ **0** / 1]<br>The L: counter counts the number of pages stored from within the document server mode screen at the operation panel. Pages stored with the Store File button from within the Copy mode screen go to the C: counter. |
| 8 692 | C:TX PGS/LS | *CTL | |
| 8 693 | F:TX PGS/LS | *CTL | |
| 8 694 | P:TX PGS/LS | *CTL | |
| 8 695 | S:TX PGS/LS | *CTL | |
| 8 696 | L:TX PGS/LS | *CTL | |

Note

- Print jobs done with Web Image Monitor and Desk Top Binder are added to the count.
- If several documents are merged for sending, the number of pages stored are counted for the application that stored them.
- When several documents are sent by a Fax broadcast, the F: count is done for the number of pages sent to each destination.

| | | | |
|---|---|---|---|
| 8 701 | TX PGS/Port | *CTL | [0 to 9999999/ **0** / 1] |
| | These SPs count the number of pages sent by the physical port used to send them. For example, if a 3-page original is sent to 4 destinations via ISDN G4, the count for ISDN (G3, G4) is 12. | | |
| 8 701 1 | PSTN-1 | | |
| 8 701 2 | PSTN-2 | | |
| 8 701 3 | PSTN-3 | | |
| 8 701 4 | ISDN (G3,G4) | | |
| 8 701 5 | Network | | |

| | | | |
|---|---|---|---|
| 8 711 | T:Scan PGS/Comp | *CTL | [0 to 9999999/ **0** / 1] |
| 8 715 | S:Scan PGS/Comp | *CTL | [0 to 9999999/ **0** / 1] |
| | These SPs count the number of pages sent by each compression mode. | | |
| 8 715 1 | JPEG/JPEG2000 | | |
| 8 715 2 | TIFF(Multi/Single) | | |
| 8 715 3 | PDF | | |
| 8 715 4 | Other | | |

| | | | |
|---|---|---|---|
| 8 741 | RX PGS/Port | *CTL | [0 to 9999999/ **0** / 1] |
| | These SPs count the number of pages received by the physical port used to receive them. | | |
| 8 741 1 | PSTN-1 | | |
| 8 741 2 | PSTN-2 | | |
| 8 741 3 | PSTN-3 | | |
| 8 741 4 | ISDN (G3,G4) | | |
| 8 741 5 | Network | | |

| | | | |
|---|---|---|---|
| 8 771 | Dev Counter | *CTL | [0 to 9999999/ **0** / 1] |
| | These SPs count the frequency of use (number of rotations of the development rollers) for black and other color toners. | | |
| 8 771 1 | Total | | |
| 8 771 2 | K | | |
| 8 771 3 | Y | | |
| 8 771 4 | M | | |
| 8 771 5 | C | | |

| | | | |
|---|---|---|---|
| 8 781 | Toner Bottle Info. | *ENG | [0 to 9999999/ **0** / 1] |
| | These SPs display the number of already replaced toner bottles.<br>**NOTE:** Currently, the data in SP7-833-011 through 014 and the data in SP8-781-001 through 004 are the same. | | |
| 8 781 1 | Toner: BK | The number of black-toner bottles | |
| 8 781 2 | Toner: Y | The number of yellow-toner bottles | |
| 8 781 3 | Toner: M | The number of magenta-toner bottles | |
| 8 781 4 | Toner: C | The number of cyan-toner bottles | |

| | | | |
|---|---|---|---|
| 8 791 | LS Memory Remain | *CTL | This SP displays the percent of space available on the document server for storing documents.<br>[0 to 100 / **0** / 1] |

| | | | |
|---|---|---|---|
| 8 801 | Toner Remain | *CTL | [0 to 100/ **0** / 1] |
| | These SPs display the percent of toner remaining for each color. This SP allows the user to check the toner supply at any time.<br>**Note:** This precise method of measuring remaining toner supply (1% steps) is better than other machines in the market that can only measure in increments of 10 (10% steps). | | |
| 8 801 1 | K | | |
| 8 801 2 | Y | | |
| 8 801 3 | M | | |
| 8 801 4 | C | | |

| | | | |
|---|---|---|---|
| 8 851 | Coverage Count: 0-10% | *ENG | [0 to 9999999/ **0** / 1] |
| | These SPs display the number of scanned sheets on which the coverage of each color is from 0% to 10%. | | |
| 8 851 11 | 0 to 2%: BK | 8 851 31 | 5 to 7%: BK |
| 8 851 12 | 0 to 2%: Y | 8 851 32 | 5 to 7%: Y |
| 8 851 13 | 0 to 2%: M | 8 851 33 | 5 to 7%: M |
| 8 851 14 | 0 to 2%: C | 8 851 34 | 5 to 7%: C |
| 8 851 21 | 3 to 4%: BK | 8 851 41 | 8 to 10%: BK |
| 8 851 22 | 3 to 4%: Y | 8 851 42 | 8 to 10%: Y |
| 8 851 23 | 3 to 4%: M | 8 851 43 | 8 to 10%: M |
| 8 851 24 | 3 to 4%: C | 8 851 44 | 8 to 10%: C |

| | | | |
|---|---|---|---|
| 8 861 | Coverage Count: 11-20% | *ENG | [0 to 9999999/ **0** / 1] |
| | These SPs display the number of scanned sheets on which the coverage of each color is from 11% to 20%. | | |
| 8 861 1 | BK | | |
| 8 861 2 | Y | | |
| 8 861 3 | M | | |
| 8 861 4 | C | | |

| | | | |
|---|---|---|---|
| 8 871 | Coverage Count: 21-30% | *ENG | [0 to 9999999/ **0** / 1] |
| | These SPs display the number of scanned sheets on which the coverage of each color is from 21% to 30%. | | |
| 8 871 1 | BK | | |
| 8 871 2 | Y | | |
| 8 871 3 | M | | |
| 8 871 4 | C | | |

| | | | |
|---|---|---|---|
| 8 881 | Coverage Count: 31%- | *ENG | [0 to 9999999/ **0** / 1] |
| | These SPs display the number of scanned sheets on which the coverage of each color is 31% or higher. | | |
| 8 881 1 | BK | | |
| 8 881 2 | Y | | |
| 8 881 3 | M | | |
| 8 881 4 | C | | |

| | | | |
|---|---|---|---|
| 8 891 | Printing PGS: Present Ink | *ENG | [0 to 9999999/ **0** / 1] |
| | These SPs display the amount of the remaining current toner for each color. | | |
| 8 891 1 | BK | | |
| 8 891 2 | Y | | |
| 8 891 3 | M | | |
| 8 891 4 | C | | |

| | | | |
|---|---|---|---|
| 8 901 | Printing PGS: Log: Latest 1 | *ENG | [0 to 9999999/ **0** / 1] |
| | These SPs display the amount of the remaining previous toner for each color. | | |
| 8 901 1 | BK | | |
| 8 901 2 | Y | | |
| 8 901 3 | M | | |
| 8 901 4 | C | | |

| | | | |
|---|---|---|---|
| 8 911 | Printing PGS: Log: Latest 2 | *ENG | [0 to 9999999/ **0** / 1] |
| | These SPs display the amount of the remaining 2nd previous toner for each color. | | |
| 8 911 1 | BK | | |
| 8 911 2 | Y | | |
| 8 911 3 | M | | |
| 8 911 4 | C | | |

| | | | |
|---|---|---|---|
| 8 921 | Coverage Count: Total | *CTL | [0 to 9999999/ **0** / 1] |
| | Displays the total coverage and total printout number for each color. | | |
| 8 921 1 | BK (%) | | |
| 8 921 2 | Y (%) | | |
| 8 921 3 | M (%) | | |
| 8 921 4 | C (%) | | |
| 8 921 14 | BK (Page) | | |
| 8 921 15 | Y (Page) | | |
| 8 921 16 | M (Page) | | |
| 8 921 17 | C (Page) | | |

| | | | |
|---|---|---|---|
| 8 941 | Machine Status | *CTL | [0 to 9999999/ **0** / 1] |
| | These SPs count the amount of time the machine spends in each operation mode. These SPs are useful for customers who need to investigate machine operation for improvement in their compliance with ISO Standards. | | |
| 8 941 1 | Operation Time | Engine operation time. Does not include time while controller is saving data to HDD (while engine is not operating). | |
| 8 941 2 | Standby Time | Engine not operating. Includes time while controller saves data to HDD. Does not include time spent in Energy Save, Low Power, or Off modes. | |
| 8 941 3 | Energy Save Time | Includes time while the machine is performing background printing. | |

| | | |
|---|---|---|
| 8 941 4 | Low Power Time | Includes time in Energy Save mode with Engine on. Includes time while machine is performing background printing. |
| 8 941 5 | Off Mode Time | Includes time while machine is performing background printing. Does not include time machine remains powered off with the power switches. |
| 8 941 6 | SC | Total time when SC errors have been staying. |
| 8 941 7 | PrtJam | Total time when paper jams have been staying during printing. |
| 8 941 8 | OrgJam | Total time when original jams have been staying during scanning. |
| 8 941 9 | Supply PM Unit End | Total time when toner end has been staying |

| | | | | |
|---|---|---|---|---|
| 8 951 | AddBook Register | *CTL | | |
| | These SPs count the number of events when the machine manages data registration. | | | |
| 8 951 1 | User Code | User code registrations. | [0 to 9999999/ **0** / 1] | |
| 8 951 2 | Mail Address | Mail address registrations. | | |
| 8 951 3 | Fax Destination | Fax destination registrations. | | |
| 8 951 4 | Group | Group destination registrations. | | |
| 8 951 5 | Transfer Request | Fax relay destination registrations for relay TX. | | |
| 8 951 6 | F-Code | F-Code box registrations. | | |

| | | | |
|---|---|---|---|
| 8 951 7 | Copy Program | Copy application registrations with the Program (job settings) feature. | [0 to 255 / **0** / 255] |
| 8 951 8 | Fax Program | Fax application registrations with the Program (job settings) feature. | |
| 8 951 9 | Printer Program | Printer application registrations with the Program (job settings) feature. | |
| 8 951 10 | Scanner Program | Scanner application registrations with the Program (job settings) feature. | |

| | | | |
|---|---|---|---|
| 8 999 | Admin. Counter List | *CTL | [0 to 9999999/ **0** / 1] |
| | Displays the total coverage and total printout number for each color. | | |
| 8 999 1 | Total | | |
| 8 999 2 | Copy: Full Color | | |
| 8 999 3 | Copy: BW | | |
| 8 999 4 | Copy: Single Color | | |
| 8 999 5 | Copy: Two Color | | |
| 8 999 6 | Printer Full Color | | |
| 8 999 7 | Printer BW | | |
| 8 999 8 | Printer Single Color | | |
| 8 999 9 | Printer Two Color | | |

| | | |
|---|---|---|
| 8 999 10 | Fax Print: BW | |
| 8 999 12 | A3/DLT | |
| 8 999 13 | Duplex | |
| 8 999 14 | Coverage: Color (%) | |
| 8 999 15 | Coverage: BW (%) | |
| 8 999 16 | Coverage: Color Print Page (%) | |
| 8 999 17 | Coverage: BW Print Page (%) | |
| 8 999 101 | Transmission Total: Color | |
| 8 999 102 | Transmission Total: BW | |
| 8 999 103 | FAX Transmission | |
| 8 999 104 | Scanner Transmission: Color | |
| 8 999 105 | Scanner Transmission: BW | |

## *SP9-XXX: Others*

| **9511** | Skew Origin Set | *CTL | |
|---|---|---|---|
| 001 | M: Skew Motor | These SPs reset the skew correction value (SP2-119-001 to -003) to "0". | |
| 002 | C: Skew Motor | | |
| 003 | Y: Skew Motor | | |

| **9911** | **[Pressure Roller Condition]** | | |
|---|---|---|---|
| 001 | Normal: Threshold: Upper Limit | *ENG | [0 to 200 / **140** / 1 deg/step] |
| | Specifies the threshold temperature of the pressure roller between M (middle) and H (high). This SP is referred when the input voltage of the IH inverter is more than 93% (adjustable with SP1-916-026). | | |
| 002 | Normal: Threshold: Lower Limit | *ENG | [0 to 200 / **120** / 1 deg/step] |
| | Specifies the threshold temperature of the pressure roller between L (low) and M (middle). This SP is referred when the input voltage of the IH inverter is more than 93% (adjustable with SP1-916-026). | | |
| 003 | Coefficient: Low | *ENG | [0 to 3 / **2** / 1 /step]<br>0: No effect<br>1: Normal<br>2: High<br>3: Highest |
| | **DFU**<br>Adjusts the coefficient value of the temperature correction for ferrite roller rotation when the the fusing unit is in the low temperature. | | |

| | | | |
|---|---|---|---|
| 004 | Coefficient: Mid. | *ENG | [0 to 3 / **1** / 1 /step] **DFU** |
| 005 | Coefficient: High | *ENG | [0 to 3 / **0** / 1 /step] **DFU** |
| 006 | Stand-by: Threshold: Upper Limit | *ENG | [0 to 200 / **180** / 1 deg/step] |
| | Specifies the threshold temperature of the pressure roller between M (middle) and H (high). This SP is referred when the input voltage of the IH inverter is 93% or less (adjustable with SP1-916-026). | | |
| 007 | Stand-by: Threshold: Lower Limit | *ENG | [0 to 200 / **120** / 1 deg/step] |
| | Specifies the threshold temperature of the pressure roller between L (low) and M (middle). This SP is referred when the input voltage of the IH inverter is 93% or less (adjustable with SP1-916-026). | | |
| 008 | Mid. Thick: A3: Threshold: Upper Limit | *ENG | [0 to 200 / **200** / 1 deg/step] |
| | Specifies the threshold temperature of the pressure roller between M (middle) and H (high). This SP is referred when the paper of 275 mm width or more is used in the middle thick paper and 205/154 mm/sec line speed mode. | | |
| 009 | Mid. Thick: A3: Threshold: Lower Limit | *ENG | [0 to 200 / **190** / 1 deg/step] |
| | Specifies the threshold temperature of the pressure roller between L (low) and M (middle). This SP is referred when the paper of 275 mm width or more is used in the middle thick paper and 205/154 mm/sec line speed mode. | | |

| **9912** | **[Target Angle]** Ferrite Roller Paper Size Adjustment **DFU** | | |
|---|---|---|---|
| 001 | A3/DLT | *ENG | [0 to 960 / **323** / 1 PULSE/step] |
| 002 | B4 | *ENG | [0 to 960 / **381** / 1 PULSE/step] |
| 003 | A4/LT | *ENG | [0 to 960 / **400** / 1 PULSE/step] |
| 004 | B5 | *ENG | [0 to 960 / **498** / 1 PULSE/step] |
| 005 | A5/HLT | *ENG | [0 to 960 / **525** / 1 PULSE/step] |
| 006 | B6 | *ENG | [0 to 960 / **525** / 1 PULSE/step] |
| 007 | A6 | *ENG | [0 to 960 / **525** / 1 PULSE/step] |

| | | | |
|---|---|---|---|
| **9921** | Page Correction Setting | *CTL | Not used in this machine.<br>[0 to 9999999/ **0** / 1] |

| | | | |
|---|---|---|---|
| **9965** | **[Repeat Print Temp.Correction]** | | |
| | These SPs are used for Preventing the fusing temperature overheating due to a multiple printing job. | | |
| 001 | JOB Interval: Plain | *ENG | [0 to 120 / **30** / 1 sec/step] |
| | Specifies the job interval time in plain paper mode. The machine does not enter the temperature correction mode for preventing the overheating for the time specified with this SP. | | |
| 002 | JOB Interval: M-Thick | *ENG | [0 to 120 / **30** / 1 sec/step] |
| | Specifies the job interval time in middle thick paper mode. The machine does not enter the temperature correction mode for preventing the overheating for the time specified with this SP. | | |

| | | | |
|---|---|---|---|
| 003 | Shift Time | *ENG | [0 to 1200 / **600** / 10 sec/step] |
| | Specifies the threshold time for entering the temperature correction mode. If a job continues for the time specified with this SP, the machine enteres the temperature correction mode. | | |
| 004 | Offset Value: Plain: Low Temp. | *ENG | [0 to 20 / **5** / 1 deg/step] |
| | Specified the offset temperature for the plain paper in the low temperature. The machine decreases this temperature when a job continues for 600 seconds (adjustable with SP9-965-003) and the environment temperature is 17°C or less. | | |
| 005 | Offset Value: Plain: Normal/High Temp. | *ENG | [0 to 20 / **5** / 1 deg/step] |
| | Specified the offset temperature for the plain paper in the low temperature. The machine decreases this temperature when a job continues for 600 seconds (adjustable with SP9-965-003) and the environment temperature is more than 17°C and 30°C or less. | | |
| 006 | Offset Value: M-Thick: Low Temp. | *ENG | [0 to 20 / **5** / 1 deg/step] |
| | Specified the offset temperature for the middle thick paper in the middle temperature. The machine decreases this temperature when a job continues for 600 seconds (adjustable with SP9-965-003) and the environment temperature is 17°C or less. | | |
| 007 | Offset Value: M-Thick: Normal/High Temp. | *ENG | [0 to 20 / **5** / 1 deg/step] |
| | Specified the offset temperature for the middle thick paper in the middle temperature. The machine decreases this temperature when a job continues for 600 seconds (adjustable with SP9-965-003) and the environment temperature is more than 17°C and 30°C or less. | | |

## 8.1.2 INPUT CHECK TABLE

When entering the Input Check mode, 8 digits display the result for a section. Each digit corresponds to a different device as shown in the table.

| Bit No. | 7 | 6 | 5 | 4 | 3 | 2 | 1 | 0 |
|---|---|---|---|---|---|---|---|---|
| Result | 0 or 1 | 0 or 1 | 0 or 1 | 0 or 1 | 0 or 1 | 0 or 1 | 0 or 1 | 0 or 1 |

### *Copier*

| 5803 | Description | Reading | |
|---|---|---|---|
| | | 0 | 1 |
| 5803 1 | 2nd Tray Size Detection | See table 2 following this table. | |
| 5803 2 | 1st Tray Set Detection | Set | Not set |
| 5803 3 | 1st Tray Paper Height Sensor1 | See table 1 following this table. | |
| 5803 4 | 1st Tray Paper Height Sensor2 | See table 1 following this table. | |
| 5803 5 | 2st Tray Paper Height Sensor1 | See table 1 following this table. | |
| 5803 6 | 2st Tray Paper Height Sensor2 | See table 1 following this table. | |
| 5803 7 | 1st Tray Paper End Detection | No paper | Paper remaining |
| 5803 8 | 2nd Tray Paper End Detection | No paper | Paper remaining |
| 5803 9 | 1st Tray Upper Limit Sensor | Not upper limit | Upper limit |
| 5803 10 | 2nd Tray Upper Limit Sensor | Not upper limit | Upper limit |

| 5803 | Description | Reading | |
|---|---|---|---|
| | | 0 | 1 |
| 5803 11 | Bypass Paper Width Detection | See table 3 following this table. | |
| 5803 12 | Bypass Paper End Detection | No paper | Paper remaining |
| 5803 13 | Bypass Paper Length Detection | See table 3 following this table. | |
| 5803 14 | 1st Paper Feed Sensor | Paper detected | Paper not detected |
| 5803 15 | 2st Paper Feed Sensor | Paper detected | Paper not detected |
| 5803 16 | Exit Sensor | Paper detected | Paper not detected |
| 5803 17 | Tray Full Exit Sensor | Paper not full | Paper full |
| 5803 18 | Fusing Exit Sensor | Paper not detected | Paper detected |
| 5803 19 | Fusing Entrance Sensor | Paper detected | Paper not detected |
| 5803 20 | 1st Vertical Transport Sensor | Paper detected | Paper not detected |
| 5803 21 | 2 nd Vertical Transport Sensor | Paper detected | Paper not detected |
| 5803 22 | Duplex Exit Sensor | Paper detected | Paper not detected |
| 5803 23 | Registration Sensor | Paper detected | Paper not detected |

| 5803 | Description | Reading | |
|---|---|---|---|
| | | 0 | 1 |
| 5803 24 | Duplex Entrance Sensor | Paper detected | Paper not detected |
| 5803 25 | Junction Sensor | Paper detected | Paper not detected |
| 5803 26 | 2nd Tray Set Detection | Set | Not set |
| 5803 30 | Toner End Sensor: Bk | Toner end | Toner remaining |
| 5803 31 | Toner End Sensor: M | Toner end | Toner remaining |
| 5803 32 | Toner End Sensor: C | Toner end | Toner remaining |
| 5803 33 | Toner End Sensor: Y | Toner end | Toner remaining |
| 5803 34 | Drum Phase Sensor: Bk | Actuator not detected | Actuator detected |
| 5803 35 | Drum Phase Sensor: M | Actuator not detected | Actuator detected |
| 5803 36 | Drum Phase Sensor: C | Actuator not detected | Actuator detected |
| 5803 37 | Drum Phase Sensor: Y | Actuator not detected | Actuator detected |
| 5803 38 | Interlock Release Detection 1 | Front door open | Fron door closed |
| 5803 39 | Interlock Release Detection 2 | Front door open | Fron door closed |
| 5803 40 | Right Door | Closed | Open |
| 5803 41 | Duplex Cover | Closed | Open |

| 5803 | Description | Reading | |
|---|---|---|---|
| | | 0 | 1 |
| 5803 42 | Toner Collection Bottle Set | Set | Not set |
| 5803 43 | Toner Collection Full Sensor | Not full | Full |
| 5803 46 | 1TB New Unit Detection | Not new | New |
| 5803 50 | Airflow Fan: Front: Lock | Normal | |
| 5803 51 | Airflow Fan: Rear: Lock | Normal | |
| 5803 52 | Fusing Exit Fan: Lock | Normal | Lock |
| 5803 53 | 2nd Duct Fan: Lock | Normal | Lock |
| 5803 54 | 3rd Duct Fan: Lock | Normal | Lock |
| 5803 55 | Paper Exit Fan:Lock | Normal | |
| 5803 56 | Fusing Coil Fan: Lock | Normal | |
| 5803 57 | IH Power Supply Cooling Fan: Lock | Normal | Lock |
| 5803 58 | Feed Motor Cooling Fan: Lock | Normal | |
| 5803 60 | ITB Contact Motor Position | Not contact | Contact |
| 5803 61 | Paper Transfer Contact Motor Position | Not contact | Contact |
| 5803 62 | Toner Relay Motor: Lock | Normal | Lock |
| 5803 63 | ITB Drive Motor: Lock | Normal | Lock |
| 5803 64 | K Drum/Development Drive Motor: Lock | Normal | Lock |
| 5803 65 | M Drum/Development Drive Motor: Lock | Normal | Lock |

| 5803 | Description | Reading | |
|---|---|---|---|
| | | 0 | 1 |
| 5803 66 | C Drum/Development Drive Motor: Lock | Normal | Lock |
| 5803 67 | Y Drum/Development Drive Motor: Lock | Normal | Lock |
| 5803 68 | Fusing Exit Motor:Lock | Normal | Lock |
| 5803 80 | HVPS:TTS:SC Detection | SC detected | No SC |
| 5803 81 | HVPS:CB:SC Detection | SC detected | No SC |
| 5803 82 | HVPS:D:SC Detection | SC detected | No SC |
| 5803 83 | Fusing Destination Detection: DOM | Set | Not set |
| 5803 84 | Fusing Destination Detection: NA | Set | Not set |
| 5803 85 | Fusing Destination Detection: EU | Set | Not set |
| 5803 86 | Fusing Destination Detection: TWN | Set | Not set |
| 5803 87 | Fusing New Unit Detection | New | Not new |
| 5803 88 | Fusing Unit Detection1 | - | - |
| 5803 89 | Fusing Unit Detection2 | - | - |
| 5803 90 | Zero-cross Signal | - | - |
| 5803 91 | Fusing Rotation Sensor | Actuator not detected | Actuator detected |
| 5803 92 | Fusing Pressue Release Sensor | Not used in this machine | |
| 5803 94 | GAVD Open/Close Detection | Closed (LD5V ON) | Open (LD5V OFF) |
| 5803 100 | Keycard: Set | Set | Not set |

| 5803 | Description | Reading | |
|---|---|---|---|
| | | 0 | 1 |
| 5803 101 | Mechanical Counter Bk: Set | Set | Not set |
| 5803 102 | Mechanical Counter FC: Set | Set | Not set |
| 5803 103 | Key Counter: Set | Set | Not set |
| 5803 110 | IOB Version | - | - |
| 5803 200 | Scanner HP Sensor | Not HP | HP |
| 5803 201 | Platen Cover Sensor | Open | closed |

## *ADF (B802)*

| 6007 | Description | Reading | |
|---|---|---|---|
| | | 0 | 1 |
| 6007 1 | Original Length 1 (B5 Detection Sensor) | Paper not detected | Paper detected |
| 6007 2 | Original Length 2 (A4 Detection Sensor) | Paper not detected | Paper detected |
| 6007 3 | Original Length 3 (LG Detection Sensor) | Paper not detected | Paper detected |
| 6007 4 | Original Width 1 | Paper not detected | Paper detected |
| 6007 5 | Original Width 2 | Paper not detected | Paper detected |
| 6007 6 | Original Width 3 | Paper not detected | Paper detected |
| 6007 7 | Original Width 4 | Paper not detected | Paper detected |
| 6007 9 | Original Detection | Paper not detected | Paper detected |
| 6007 10 | Separation Sensor | Paper not detected | Paper detected |
| 6007 11 | Skew Correction | Paper not detected | Paper detected |
| 6007 13 | Registration Sensor | Paper not detected | Paper detected |

| 6007 | Description | Reading | |
|---|---|---|---|
| | | 0 | 1 |
| 6007 14 | Exit Sensor | Paper not detected | Paper detected |
| 6007 15 | Feed Cover Sensor | ADF cover close | ADF cover open |
| 6007 16 | Lift Up Sensor | ADF cover close | ADF cover open |

## *1000-Sheet Booklet Finisher (B793)*

| 6138 | Description | Reading | |
|---|---|---|---|
| | | 0 | 1 |
| 6138 1 | Interference Escape Sensor (Stapler Safety Sensor) | Not interfered | Interfered |
| 6138 2 | Staple Moving HP Sensor (Staple Unit HP Sensor) | Not home position | Home position |
| 6138 3 | Stuck Relay1 Release HP Sensor (Stopper S HP Sensor) | Not home position | Home position |
| 6138 4 | Exit Junction Gate HP Sensor (Stack Feed Out HP Sensor) | Home position | Not home position |
| 6138 5 | Jogger HP Sensor (Jogger Fence HP Sensor) | Not home position | Home position |
| 6138 6 | Staple Tray Paper Sensor (Staple Tray Paper Sensor) | Paper not detected | Paper detected |
| 6138 7 | Rear Edge Fence HP Sensor (Paper Stack Stopper HP Sensor) | Not home position | Home position |
| 6138 8 | Saddle Stitch Exit Sensor | Paper detected | Paper not detected |
| 6138 9 | Stuck Relay2 Roller HP Sensor (Clamp Roller HP Sensor) | Home position | Not home position |
| 6138 10 | Folder Tray Full Sensor 1 (Bottom Tray HP 1 Sensor) | Full | Not full |
| 6138 11 | Folder Tray Full Sensor 2 (Bottom Tray HP 2 Sensor) | Not full | Full |

| 6138 | Description | Reading | |
|---|---|---|---|
| | | 0 | 1 |
| 6138 12 | Folder Plate HP Sensor<br>(Fold Plate HP Sensor) | Not home position | Home position |
| 6138 13 | Saddle Stitch Arrival Sensor<br>(Fold Unit Entrance Sensor) | Paper not detected | Paper detected |
| 6138 14 | Folder Cam HP Sensor<br>(Fold Plate Cam HP Sensor) | Not home position | Home position |
| 6138 15 | Staple Exit Sensor<br>(Stapler Tray Exit Sensor) | Paper detected | Paper not detected |
| 6138 16 | Shift Tray Paper Sensor<br>(Shift Tray Paper Position Sensor) | Shift tray not detected | Shift tray detected |
| 6138 17 | Shift Tray Full | Full | Nor full |
| 6138 18 | Shift Roller HP Sensor | Not home position | Home position |
| 6138 20 | Entrance Sensor<br>(Finisher Entrance Sensor) | Paper detected | Paper not detected |
| 6138 21 | Shift Exit Sensor<br>(Shift Tray Exit Sensor) | Paper not detected | Paper detected |
| 6138 22 | Proof Exit Sensor<br>(Proof Tray Exit Sensor) | Paper detected | Paper not detected |
| 6138 23 | Exit Guide Plate HP Sensor | Not home position | Home position |
| 6138 24 | Proof Full Sensor<br>(Proof Tray Full Sensor) | Not full | Full |
| 6138 25 | Upper Cover Sensor | Open | Close |
| 6138 26 | Door SW<br>(Front Door Switch) | Close | Open |

| 6138 | Description | Reading | |
|---|---|---|---|
| | | 0 | 1 |
| 6138 27 | Clincher Timing Sensor | Encoder | |
| 6138 28 | Clincher HP Sensor | Home position | Not home position |
| 6138 29 | Driver Timing Sensor | Encoder | |
| 6138 30 | Staple Near End | Staple remaining | Staple near end |
| 6138 31 | Self Priming | Staple detected | Staple not detected |
| 6138 32 | Driver HP Sensor | Home position | Not home position |
| 6138 33 | Punch Registration Detection HP Sensor | Not home position | Home position |
| 6138 34 | Punch Moving HP Sensor (Punch Movement HP Sensor) | Not home position | Home position |
| 6138 35 | Punch HP Sensor (Punch HP Sensor) | Home position | Not home position |
| 6138 36 | Punch Pulse Count Sensor (Punch Encoder Sensor) | Encoder | |
| 6138 37 | Punch Chad Full Sensor (Punch Hopper Full Sensor) | Not full | Full |
| 6138 38 | Punch Registration Detection Sensor (Paper Position Sensor) | Paper detected | Paper not detected |

### *1000-Sheet Finisher (B408)*

| 6139 | Description | Reading | |
|---|---|---|---|
| | | 0 | 1 |
| 6139 1 | Entrance Sensor | Paper detected | Paper not detected |
| 6139 2 | Shift Exit Sensor<br>(Lower Tray Exit Sensor) | Paper not detected | Paper detected |
| 6139 3 | Staple Entrance Sensor<br>(Stapler Tray Entrance Sensor) | Paper detected | Paper not detected |
| 6139 4 | Staple Moving HP Sensor<br>(Stapler HP Sensor) | Not home position | Home position |
| 6139 5 | Jogger HP Sensor<br>(Jogger Fence HP Sensor) | Not home position | Home position |
| 6139 6 | Stack Feed-out Belt HP Sensor | Home position | Not home position |
| 6139 7 | Staple Tray Paper Sensor | Paper not detected | Paper detected |
| 6139 8 | Staple Rotation Sensor<br>(Staple Rotation HP Sensor) | Not home position | Home position |
| 6139 9 | Staple Sensor | Staple detected | Staple not detected |
| 6139 10 | Staple READY Detection | Staple detected | Staple not detected |
| 6139 11 | Exit Guide Plate HP<br>(Exit Guide Plate HP Sensor) | Not home position | Home position |

| 6139 | Description | Reading | |
|---|---|---|---|
| | | 0 | 1 |
| 6139 12 | Shift HP Sensor | Not home position | Home position |
| 6139 13 | Paper Sensor<br>(Stack Height Sensor) | Output tray not detected | Output tray detected |
| 6139 14 | Tray Lower Sensor<br>(Lower Tray Lower Limit Sensor) | Lower limit | Not lower limit |
| 6139 15 | Proof Full Sensor<br>(Paper Limit Sensor) | Not full | Full |

### *500-Sheet Finisher (D372)*

| 6145 | Description | Reading | |
|---|---|---|---|
| | | 0 | 1 |
| 6145 1 | Entrance Sensor | Paper detected | Paper not detected |
| 6145 2 | Hitroll HP Sensor | Paper not detected | Paper detected |
| 6145 3 | Front Jogger HP Sensor (Front Jogger Fence HP Sensor) | Home position | Not home position |
| 6145 4 | Rear Jogger HP Sensor (Rear Jogger Fence HP Sensor) | Home position | Not home position |
| 6145 5 | Staple Tray Paper Sensor | Paper detected | Paper not detected |
| 6145 6 | Staple Moving HP Sensor | Not HP | HP |
| 6145 7 | Stack Feed-out Belt HP | Not HP | HP |
| 6145 8 | Shift Tray Paper Sensor | Paper detected | Paper not detected |
| 6145 9 | Upper Cover Sensor | HP | Not HP |
| 6145 10 | Staple Rotation Sensor | HP | Not HP |
| 6145 11 | Staple Near End | HP | Not HP |
| 6145 12 | Self Priming | HP | Not HP |
| 6145 13 | Shift Tray Limit Sensor | Not full | Full |

### *Bridge Unit (D386)*

| 6150 | Description | Reading | |
|---|---|---|---|
| | | 0 | 1 |
| 6150 1 | Bridge: Exit Sensor | Paper detected | Paper not detected |
| 6150 2 | Bridge: Feed Sensor | Paper detected | Paper not detected |
| 6150 3 | Bridge:Set Sensor | Set | Not Set |
| 6150 4 | Bridge: Exit Cover Detection | Closed | Open |
| 6150 5 | Bridge: Feed Cover Detection | Closed | Open |

### *Internal Shift Tray (D388)*

| 6152 | Description | Reading | |
|---|---|---|---|
| | | 0 | 1 |
| 6152 1 | Shift:Set Sensor | Set | Not Set |
| 6152 2 | Shift: Position Sensor | Tray position: front | Tray position: rear |

### *1 Bin Tray (D414)*

| 6154 | Description | Reading | |
|---|---|---|---|
| | | 0 | 1 |
| 6154 1 | 1 bin: Set Sensor | Set | Not Set |
| 6154 2 | 1 bin: Paper Sensor | Paper detected | Paper not detected |

## *Two-Tray Paper Feed Unit (D351) / 1200 LCIT (D353)*

| 6160 | Description | Reading | |
|---|---|---|---|
| | | 0 | 1 |
| 6160 1 | Bank: Tray3: Feed Sensor | Paper not detected | Paper detected |
| 6160 2 | Bank: Tray4: Feed Sensor | Paper not detected | Paper detected |
| 6160 3 | Bank: Tray5: Feed Sensor | Paper not detected | Paper detected |
| 6160 4 | Bank: Tray3: Relay Sensor | Paper not detected | Paper detected |
| 6160 5 | Bank: Tray4: Relay Sensor | Paper not detected | Paper detected |
| 6160 6 | Bank: Tray5: Relay Sensor | Paper not detected | Paper detected |
| 6160 7 | Bank: Feed Cover Detection | Closed | Open |
| 6160 11 | Bank: Palau: Paper Supply Switch | Closed | Open |
| 6160 12 | Bank: Palau: Slide Switch | Closed | Open |

### *Table 1: Paper Height Sensor*

0: Deactivated, 1: Activated (actuator inside sensor)

| Remaining paper | Paper height sensor 1 | Paper height sensor 2 |
|---|---|---|
| Full | 0 | 0 |
| Nearly full | 1 | 0 |
| Near end | 1 | 1 |
| Almost empty | 0 | 1 |

### *Table 2: Paper Size Switch (Tray 2)*

Switch 1 is used for tray set detection.

0: Pushed, 1: Not pushed

| Models | | Switch Location | | |
|---|---|---|---|---|
| **North America** | **Europe/Asia** | **4** | **3** | **2** |
| 11" x 17" SEF*1<br>(A3 SEF) | A3 SEF*1<br>(11" x 17" SEF) | 0 | 0 | 1 |
| 8.5" x 14" SEF *2<br>(B4 SEF) | B4 SEF *2<br>(8.5" x 14" SEF) | 0 | 0 | 0 |
| A4 SEF | A4 SEF | 1 | 1 | 0 |
| 8.5" x 11" SEF | 8.5" x 11" SEF | 1 | 1 | 1 |
| B5 SEF | B5 SEF | 0 | 1 | 1 |
| 11" x 81/2" LEF*3<br>(A4 LEF) | A4 LEF*3<br>(11" x 81/2" LEF) | 1 | 0 | 0 |
| 10.5" x 7.25" LEF*4<br>(B5 LEF) | B5 LEF*4<br>(10.5" x 7.25" LEF) | 0 | 1 | 0 |
| A5 LEF | A5 LEF | 1 | 0 | 1 |

*1: The machine detects either 11" x 17" SEF or A3 SEF, depending on the setting of SP 5-181-003.

*2: The machine detects either 8.5" x 14" SEF or B4 SEF, depending on the setting of SP 5-181-004.

*3: The machine detects either 11" x 81/2" LEF or A4 LEF, depending on the setting of SP 5-181-002.

*4: The machine detects either B5 LEF or 10.5" x 7.25" LEF, depending on the setting of SP 5-181-005.

### *Table 3: Paper Size (By-pass Table)*

0: ON, 1: OFF

| By-pass Paper Size Sensor | | | | Length Sensor | NA | EU/ASIA |
|---|---|---|---|---|---|---|
| bit3 | Bit2 | Bit1 | Bit0 | | | |
| 1 | 1 | 1 | 1 | 1 | HLT SEF | A6 SEF |
| 0 | 1 | 1 | 1 | 1 | HLT SEF | A6 SEF |
| 0 | 0 | 1 | 1 | 1 | HLT SEF | A5 SEF |
| 1 | 0 | 1 | 1 | 1 | HLT SEF | A5 SEF |
| 1 | 0 | 0 | 1 | 0 | LT/LG SEF*[1] | A4 SEF |
| 1 | 0 | 0 | 1 | 1 | LT/LG SEF*[1] | A5 LEF |
| 1 | 1 | 0 | 1 | 0 | LT/LG SEF*[1] | A4 SEF |
| 1 | 1 | 0 | 1 | 1 | LT/LG SEF*[1] | A5 LEF |
| 1 | 1 | 0 | 0 | 0 | DLT SEF | A3 SEF |
| 1 | 1 | 0 | 0 | 1 | LT LEF | A4 LEF |
| 1 | 1 | 1 | 0 | 0 | DLT SEF | A3 SEF |
| 1 | 1 | 1 | 0 | 1 | LT LEF | A4 LEF |

*1: The paper size (LT or LG) can be selected with SP1-007-001.

### *Table 4: APS Original Size Detection*

| Original Size | | Length Sensor | | | Width Sensor | | SP4-301 display |
|---|---|---|---|---|---|---|---|
| **Metric version** | **Inch version** | **L3** | **L2** | **L1** | **W1** | **W2** | |
| A3 | 11" x 17" | O | O | O | O | O | 00011111 |
| B4 | 10" x 14" | O | O | O | O | X | 00011110 |
| F4<br>8.5" x 13", 8.25" x 13", or 8" x 13"<br>SP 5126 controls the size that is detected | 8.5" x 14" | O | O | O | X | X | 00011100 |
| A4 LEF | 8.5" x 11" | X | X | X | O | O | 00000011 |
| B5 LEF | - | X | X | X | O | X | 00000010 |
| A4 SEF | 11" x 8.5" | X | O | O | X | X | 00001100 |
| B5 SEF | - | X | X | O | X | X | 00000100 |
| A5 LEF/ SEF | 5.5" x 8.5",<br>8.5" x 5.5" | X | X | X | X | X | 00000000 |

## 8.1.3 OUTPUT CHECK TABLE

### *Copier*

| 5804 | Display | Description |
|---|---|---|
| 5804 3 | Drum/Dev Motor: K: 230mm/s | Drum/Development Drive Motor-K: 230 mm/s |
| 5804 4 | Drum/Dev Motor: K: 205mm/s | Drum/Development Drive Motor-K: 205 mm/s |
| 5804 5 | Drum/Dev Motor: K: 154mm/s | Drum/Development Drive Motor-M: 154 mm/s |
| 5804 7 | Drum/Dev Motor: K: 77mm/s | Drum/Development Drive Motor-M: 77 mm/s |
| 5804 10 | Drum/Dev Motor: M: 230mm/s | Drum/Development Drive Motor- C: 230 mm/s |
| 5804 11 | Drum/Dev Motor: M: 205mm/s | Drum/Development Drive Motor-Y: 205 mm/s |
| 5804 12 | Drum/Dev Motor: M: 154mm/s | Drum/Development Drive Motor-Y: 154 mm/s |
| 5804 14 | Drum/Dev Motor: M: 77mm/s | Drum/Development Drive Motor-Y: 77 mm/s |
| 5804 17 | Drum/Dev Motor: C: 230mm/s | Drum/Development Drive Motor- C: 230 mm/s |
| 5804 18 | Drum/Dev Motor: C: 205mm/s | Drum/Development Drive Motor-Y: 205 mm/s |
| 5804 19 | Drum/Dev Motor: C: 154mm/s | Drum/Development Drive Motor-Y: 154 mm/s |

| 5804 | Display | Description |
|---|---|---|
| 5804 21 | Drum/Dev Motor: C: 77mm/s | Drum/Development Drive Motor-Y: 77 mm/s |
| 5804 24 | Drum/Dev Motor: Y: 230mm/s | Drum/Development Drive Motor- C: 230 mm/s |
| 5804 25 | Drum/Dev Motor: Y: 205mm/s | Drum/Development Drive Motor-Y: 205 mm/s |
| 5804 26 | Drum/Dev Motor: Y: 154mm/s | Drum/Development Drive Motor-Y: 154 mm/s |
| 5804 28 | Drum/Dev Motor: Y: 77mm/s | Drum/Development Drive Motor-Y: 77 mm/s |
| 5804 31 | Fusing Exit Motor: 230mm/s | Fusing/Paper Exit Motor: 230 mm/s |
| 5804 32 | Fusing Exit Motor: 205mm/s | Fusing/Paper Exit Motor: 205 mm/s |
| 5804 33 | Fusing Exit Motor: 154mm/s | Fusing/Paper Exit Motor: 154 mm/s |
| 5804 35 | Fusing Exit Motor: 77mm/s | Fusing/Paper Exit Motor: 77 mm/s |
| 5804 36 | Fusing Exit Motor: 56mm/s | Fusing/Paper Exit Motor: 56 mm/s |
| 5804 37 | Toner Relay Motor | Toner Transport Motor |
| 5804 40 | Image Transfer Motor: 230mm/s | ITB Drive Motor: 230 mm/s |
| 5804 41 | Image Transfer Motor: 205mm/s | ITB Drive Motor: 205 mm/s |
| 5804 42 | Image Transfer Motor: 154mm/s | ITB Drive Motor: 154 mm/s |
| 5804 44 | Image Transfer Motor: 77mm/s | ITB Drive Motor: 77 mm/s |
| 5804 50 | Feed Motor: 300mm/s | Paper Feed Motor: 300 mm/s |
| 5804 51 | Feed Motor: 265mm/s | Paper Feed Motor: 265 mm/s |

| 5804 | Display | Description |
|---|---|---|
| 5804 52 | Feed Motor: 242mm/s | Paper Feed Motor: 242 mm/s |
| 5804 53 | Feed Motor: 230mm/s | Paper Feed Motor: 230 mm/s |
| 5804 54 | Feed Motor: 205mm/s | Paper Feed Motor: 205 mm/s |
| 5804 55 | Feed Motor: 154mm/s | Paper Feed Motor: 154 mm/s |
| 5804 56 | Feed Motor: 115mm/s | Paper Feed Motor: 115mm/s |
| 5804 57 | Feed Motor: 77mm/s | Paper Feed Motor: 115mm/s |
| 5804 58 | Feed Motor: 215mm/s | Registration Motor: 215 mm/s |
| 5804 60 | Regist Motor: 230mm/s | Registration Motor: 230 mm/s |
| 5804 61 | Regist Motor: 205mm/s | Registration Motor: 205 mm/s |
| 5804 62 | Regist Motor: 154mm/s | Registration Motor: 154 mm/s |
| 5804 64 | Regist Motor: 77mm/s | Registration Motor: 77 mm/s |
| 5804 67 | Duplex Feed M:CW:230mm/s | Duplex/By-pass Motor: CW: 230 mm/s |
| 5804 68 | Duplex Feed M:CW:205mm/s | Duplex/By-pass Motor: CW: 205 mm/s |
| 5804 69 | Duplex Feed Motor: CW: 154mm/s | Duplex/By-pass Motor: CW: 154 mm/s |
| 5804 71 | Duplex Feed Motor: CW: 77mm/s | Duplex/By-pass Motor: CW: 77 mm/s |
| 5804 74 | Duplex Feed M:CCW:230mm/s | Duplex/By-pass Motor: CCW: 230 mm/s |
| 5804 75 | Duplex Feed M:CCW:205mm/s | Duplex/By-pass Motor: CCW: 205 mm/s |
| 5804 76 | Duplex Feed Motor: CCW: 154mm/s | Duplex/By-pass Motor: CCW: 154 mm/s |

| 5804 | Display | Description |
|---|---|---|
| 5804 78 | Duplex Feed Motor: CCW: 77mm/s | Duplex/By-pass Motor: CCW: 77 mm/s |
| 5804 81 | Duplex Reverse M:CW:230mm/s | Duplex Inverter Motor: CW: 230 mm/s |
| 5804 82 | Duplex Reverse M:CW:205mm/s | Duplex Inverter Motor: CW: 205 mm/s |
| 5804 83 | Duplex Reverse Motor: CW: 154mm/s | Duplex Inverter Motor: CW: 154 mm/s |
| 5804 85 | Duplex Reverse Motor: CW: 77mm/s | Duplex Inverter Motor: CW: 77 mm/s |
| 5804 88 | Duplex Reverse M:CCW:230mm/s | Duplex Inverter Motor: CCW: 230 mm/s |
| 5804 89 | Duplex Reverse M:CCW:205mm/s | Duplex Inverter Motor: CCW: 205 mm/s |
| 5804 90 | Duplex Reverse Motor: CCW: 154mm/s | Duplex Inverter Motor: CCW: 154 mm/s |
| 5804 92 | Duplex Reverse Motor: CCW: 77mm/s | Duplex Inverter Motor: CCW: 77 mm/s |
| 5804 95 | 1TB Contact Motor | Image Transfer Belt Contact Motor |
| 5804 96 | Paper Transfer Contact Motor | Paper Transfer Contact Motor |
| 5804 97 | 1st Tray Lift Motor: Up | Tray Lift Motor 1: Lift Up |
| 5804 98 | 1st Tray Lift Motor: Down | Tray Lift Motor 1: Lift Down |
| 5804 99 | 2ndTray Lift Motor: Up | Tray Lift Motor 2: Lift Up |
| 5804 100 | 2nd Tray Lift Motor: Down | Tray Lift Motor 2: Lift Down |

| 5804 | Display | Description |
|---|---|---|
| 5804 102 | Fusing Pressue Release Motor | Not used in this machine |
| 5804 104 | Polygon Moter: LL | Polygon Motor: LL |
| 5804 105 | Polygon Moter: L | Polygon Motor: L |
| 5804 107 | Polygon Moter: HH | Polygon Motor: HH |
| 5804 110 | Air Flow Fan: Front | Ventilation Fan - Front |
| 5804 111 | Air Flow Fan:Rear | Ventilation Fan - Rear |
| 5804 112 | Fusing Fan:H | Fusing Fan: High Speed |
| 5804 113 | Fusing Fan:L | Fusing Fan: Low Speed |
| 5804 114 | PSU Cooling Fan | PSU Fan 1: High Speed |
| 5804 115 | 2nd Duct Fan: H | Duct Fan 2: High Speed |
| 5804 116 | 2nd Duct Fan: L | Duct Fan 2: Low Speed |
| 5804 117 | 3rd Duct Fan: H | Duct Fan 3: High Speed |
| 5804 118 | 3rd Duct Fan: L | Duct Fan 3: Low Speed |
| 5804 119 | Paper Exit Fan:H | Paper Exit Fan: High Speed |
| 5804 120 | Paper Exit Fan:L | Paper Exit Fan: Low Speed |
| 5804 121 | Fusing Coil Fan | IH Coil Fan |
| 5804 122 | IH Power Supply Cooling Fan | IH Inverter Fan |
| 5804 123 | Feed Motor Cooling Fan: Lock | Feed Motor Cooling Fan: Lock |
| 5804 126 | Development Clutch: Bk | Development Clutch-K |
| 5804 127 | Development Clutch: M | Development Clutch-M |

| 5804 | Display | Description |
|---|---|---|
| 5804 128 | Development Clutch: C | Development Clutch-C |
| 5804 129 | Development Clutch: Y | Development Clutch-Y |
| 5804 130 | Toner Bottle Clutch: Bk | Toner Bottle Clutch-K |
| 5804 131 | Toner Bottle Clutch: M | Toner Bottle Clutch-M |
| 5804 132 | Toner Bottle Clutch: C | Toner Bottle Clutch-C |
| 5804 133 | Toner Bottle Clutch:Y | Toner Bottle Clutch-Y |
| 5804 134 | Toner Supply Pump: Bk | Toner Supply Clutch: Bk |
| 5804 135 | Toner Supply Pump: M | Toner Supply Clutch: M |
| 5804 136 | Toner Supply Pump: C | Toner Supply Clutch: C |
| 5804 137 | Toner Supply Pump: Y | Toner Supply Clutch: Y |
| 5804 138 | 1st Paper Feed Clutch | Paper Feed Clutch 1 |
| 5804 139 | 2st Paper Feed Clutch | Paper Feed Clutch 2 |
| 5804 140 | Bypass Feed Clutch | By-pass Feed Clutch |
| 5804 141 | Bypass Pickup Solenoid | Bypass Pickup Solenoid |
| 5804 142 | Feed Tray lock Solenoid | Tray Lock Solenoid |
| 5804 143 | TD Sensor Shutter Solenoid | ID Sensor Shutter Solenoid |
| 5804 144 | Exit Junction Solenoid | Junction Gate 1 Solenoid |
| 5804 145 | 1st Feed Pickup Solenoid | 1st Pickup Solenoid |
| 5804 146 | 2st Feed Pickup Solenoid | 2nd Pickup Solenoid |
| 5804 147 | Duplex Junction Solenoid | Duplex Junction Solenoid |

| 5804 | Display | Description |
|---|---|---|
| 5804 161 | PCL: Bk | - |
| 5804 162 | PCL: M | - |
| 5804 163 | PCL: C | - |
| 5804 164 | PCL: Y | - |
| 5804 165 | TD Sensor Power Supply | TD Sensor:Bk |
| 5804 166 | HST Sensor:Bk | TD Sensor: M |
| 5804 167 | HST Sensor: M | TD Sensor: C |
| 5804 168 | HST Sensor: C | TD Sensor: Y |
| 5804 169 | HST Sensor: Y | Toner End Sensor: Bk |
| 5804 170 | Toner End Sensor: Bk | Toner End Sensor: M |
| 5804 171 | Toner End Sensor: M | Toner End Sensor: C |
| 5804 172 | Toner End Sensor: C | Toner End Sensor: Y |
| 5804 173 | Toner End Sensor: Y | ID Sensor: Front |
| 5804 174 | TM Sensor: Front | ID Sensor: Center |
| 5804 175 | TM Sensor: Center | ID Sensor: Rear |
| 5804 176 | TM Sensor: Rear | ID Sensor: M |
| 5804 177 | TM Sensor: M | ID Sensor: C |
| 5804 178 | TM Sensor: C | ID Sensor: Y |

| 5804 | Display | Description |
|---|---|---|
| 5804 179 | TM Sensor: Y | Paper Feed Motor 2: 115 mm/s (Optional Paper Feed Unit) |
| 5804 181 | Bank Motor 2: 115mm/s | Paper Feed Motor 2: 154 mm/s (Optional Paper Feed Unit) |
| 5804 182 | Bank Motor 2: 154mm/s | Paper Feed Motor 2: 205 mm/s (Optional Paper Feed Unit) |
| 5804 183 | Bank Motor 2: 205mm/s | Paper Feed Motor 2: 215 mm/s (Optional Paper Feed Unit) |
| 5804 184 | Bank Motor 2: 215mm/s | Paper Feed Motor 2: 215 mm/s (Optional Paper Feed Unit) |
| 5804 186 | PP:Development:K | - |
| 5804 187 | PP Development:M | - |
| 5804 188 | PP Development:C | - |
| 5804 189 | PP Development:Y | - |
| 5804 190 | PP Development:Y | - |
| 5804 192 | RFID ON/OFF: K | - |
| 5804 193 | RFID ON/OFF: Y | - |
| 5804 194 | RFID ON/OFF: C | - |
| 5804 195 | RFID ON/OFF: M | - |
| 5804 196 | RFID COM ON:K | - |
| 5804 197 | RFID COM ON: Y | - |

| 5804 | Display | Description |
|---|---|---|
| 5804 198 | RFID COM ON: C | - |
| 5804 199 | RFID COM ON: M | - |
| 5804 202 | Scanner Lamp | - |
| 5804 216 | LD1: K | - |
| 5804 217 | LD2: K | - |
| 5804 218 | LD1: M | - |
| 5804 219 | LD2: M | - |
| 5804 220 | LD1: C | - |
| 5804 221 | LD2: C | - |
| 5804 222 | LD1: Y | - |
| 5804 223 | LD2: Y | - |
| 5804 224 | PP:1TB:K | PP: Image Transfer Roller: K |
| 5804 225 | PP:1TB:M | PP: Image Transfer Roller: M |
| 5804 226 | PP:1TB:C | PP: Image Transfer Roller: C |
| 5804 227 | PP:1TB:Y | PP: Image Transfer Roller: Y |
| 5804 228 | PP:PTR:+ | PP: Paper Transfer Roller:+ |
| 5804 229 | PP:PTR:- | PP: Paper Transfer Roller:- |
| 5804 231 | HVPS: ChargeDC: K | - |
| 5804 232 | HVPS: ChargeDC: C | - |
| 5804 233 | HVPS: ChargeDC: M | - |

| 5804 | Display | Description |
|---|---|---|
| 5804 234 | HVPS: ChargeDC: Y | - |
| 5804 237 | PP:Charge AC:K:230mm/s | - |
| 5804 238 | PP:Charge AC:K:205mm/s | - |
| 5804 239 | HVPS: ChargeAC: K: 154mm/s | - |
| 5804 241 | HVPS: ChargeAC: K: 77mm/s | - |
| 5804 244 | PP:Charge AC:M:230mm/s | - |
| 5804 245 | PP:Charge AC:M:205mm/s | - |
| 5804 246 | HVPS: ChargeAC: M: 154mm/s | - |
| 5804 248 | HVPS: ChargeAC: M: 77mm/s | - |
| 5804 251 | PP:Charge AC:C:230mm/s | - |
| 5804 252 | PP:Charge AC:C:205mm/s | - |
| 5804 253 | HVPS: ChargeAC: C: 154mm/s | - |
| 5804 255 | HVPS: ChargeAC: C: 77mm/s | - |

### *ARDF (B802)*

| 6008 | Display | Description |
|---|---|---|
| 6008 3 | Feed Motor Forward | Feed Motor-Forward rotation |
| 6008 4 | Feed Motor Reverse | Feed Motor-Reverse rotation |
| 6008 5 | Relay Motor Forward | Transport Motor- Forward rotation |
| 6008 7 | Relay Motor Reverse | Transport Motor- Forward rotation |
| 6008 8 | Inverter Motor Reverse | - |
| 6008 9 | Feed Clutch | - |
| 6008 10 | Feed Solenoid | Pick-up Solenoid |
| 6008 11 | Inverter Solenoid | - |
| 6008 12 | Stamp | Stamp Solenoid |

## *1000-Sheet Booklet Finisher (D372)*

| 6143 | Display | Description |
|---|---|---|
| 6143 1 | Shift Motor | Shift Tray Motor |
| 6143 2 | Entrance Motor | - |
| 6143 3 | Staple Relay Motor | Stapler Unit Motor |
| 6143 4 | Knock Solenoid | |
| 6143 5 | Junction Gate SOL 1 | Proof Tray Gate Solenoid |
| 6143 6 | Junction Gate SOL 2 | Staple Tray Gate Solenoid |
| 6143 7 | Folder Roller Rotation Motor | Fold Roller Motor |
| 6143 8 | Staple Motor | Staple Fold Motor |
| 6143 10 | Exit Guide Plate Motor | - |
| 6143 11 | Shift Relay Motor | Upper Transport Motor |
| 6143 12 | Tray Motor | Shift Tray Motor |
| 6143 13 | Stack Feed-out Motor | Positioning Roller Solenoid |
| 6143 14 | Stuck Relay1 Motor | Upper Clamp Roller Motor |
| 6143 15 | Stuck Relay1 Release Motor | Upper Retraction Motor |
| 6143 16 | Rear Edge Fence Drive Motor | Bottom Fence Lift Motor |
| 6143 17 | Folder Plate Motor | - |
| 6143 18 | Drive Roller Oscillating Motor | Lower Retraction Motor |
| 6143 19 | Staple Moving Motor | Staple Unit Driver Motor |

| 6143 | Display | Description |
|---|---|---|
| 6143 20 | Jogger Motor | Jogger Motor |
| 6143 21 | Punch Registration Moving Motor | Paper Position Sensor Slide Motor |
| 6143 22 | Punch Motor | - |
| 6143 23 | Punch Moving Motor | Punch Movement Motor |

### *1000-Sheet Finisher (B408)*

| 6144 | Display | Description |
|---|---|---|
| 6144 1 | Relay Up Motor | Upper Transport Motor |
| 6144 2 | Relay Down Motor | Lower Transport Motor |
| 6144 3 | Exit Motor | - |
| 6144 4 | Proof Junction Gate SOL | Tray Junction Gate Solenoid |
| 6144 5 | Tray Up Motor | Lower Tray Lift Motor |
| 6144 6 | Jogger Motor | Jogger Fence Motor |
| 6144 7 | Staple Moving Motor | Stapler Motor |
| 6144 8 | Staple Motor | Stapler Hammer |
| 6144 9 | Staple Junction Gate SOL | Stapler Junction Gate Solenoid |
| 6144 10 | Positioning Roller Solenoid | Positioning Roller Solenoid |
| 6144 11 | Stack Feed-out Motor | - |
| 6144 12 | Shift Motor | - |
| 6144 13 | Exit Guide Plate Motor | - |

### *500-Sheet Finisher (D372)*

| 6146 | Display | Description |
|---|---|---|
| 6146 1 | Carry Motor | Transport Motor |
| 6146 2 | Hitroll Motor | Positioning Roller Arm Motor |
| 6146 3 | Front Jogger Motor | Front Fence Motor |
| 6146 4 | Rear Jogger Motor | Rear Fence Motor |
| 6146 5 | Staple Moving Motor | Stapler Movement Motor |
| 6146 6 | Stack Feed-out Motor | Feed-Out Belt Motor |
| 6146 7 | Tray Motor | Tray Lift Motor |
| 6146 8 | Staple Motor | Stapler Motor |
| 6146 9 | Stopper Solenoid r | Stack Depressor Solenoid |

### *Bridge Unit (D386)*

| 6151 | Display | Description |
|---|---|---|
| 6151 1 | Bridge: Feed Motor: Current Selection | Bridge: Feed Motor: Current switching signal |
| 6151 2 | Bridge: Feed Motor:Reset | Bridge: Feed Motor:Reset |
| 6151 3 | Bridge: Feed Motor:Enable | Bridge: Feed Motor:Enable |
| 6151 4 | Bridge: Feed Motor:230mm/s | Bridge: Feed Motor: 230mm/s |
| 6151 5 | Bridge: Feed Motor:205mm/s | Bridge: Feed Motor: 205mm/s |
| 6151 7 | Bridge: Feed Motor: 154mm/s | Bridge: Feed Motor:154mm/s |
| 6151 8 | Bridge: Feed Motor: 77mm/s | Bridge: Feed Motor: 77mm/s |
| 6151 11 | Bridge: Junction Solenoid | Bridge: Junction Solenoid |

### *Shift Tray (D388)*

| 6153 | Display | Description |
|---|---|---|
| 6153 1 | Shift: Lift-up Motor | - |

### *1 Bin Tray (D414)*

| 6155 | Display | Description |
|---|---|---|
| 6155 1 | 1 bin: Junction Solenoid | - |

## *Two-Tray Paper Feed Unit (D351) / 2000 LCT (D352) / 1200 LCT (D353)*

| 6161 | Display | Description |
|---|---|---|
| 6161 5 | Bank1: Feed Motor:300mm/s | Feed Motor:300mm/s (D351/ D352) |
| 6161 6 | Bank1: Feed Motor:265mm/s | Feed Motor:265mm/s (D351/ D352) |
| 6161 8 | Bank1: Feed Motor:230mm/s | Feed Motor:230mm/s (D351/ D352) |
| 6161 9 | Bank1: Feed Motor:215mm/s | Feed Motor:215mm/s (D351/ D352) |
| 6161 10 | Bank1: Feed Motor:205mm/s | Feed Motor:205mm/s (D351/ D352) |
| 6161 11 | Bank1: Feed Motor:154mm/s | Feed Motor:154mm/s (D351/ D352) |
| 6161 12 | Bank1: Feed Motor:115mm/s | Feed Motor:115mm/s (D351/ D352) |
| 6161 13 | Bank1: Feed Motor:77mm/s | Feed Motor:77mm/s (D351/ D352) |
| 6161 15 | Bank2: Feed Motor:300mm/s | Feed Motor:300mm/s (D353) |
| 6161 16 | Bank2: Feed Motor:265mm/s | Feed Motor:300mm/s (D353) |
| 6161 18 | Bank2: Feed Motor:230mm/s | Feed Motor:300mm/s (D353) |
| 6161 19 | Bank2: Feed Motor:215mm/s | Feed Motor:300mm/s (D353) |
| 6161 20 | Bank2: Feed Motor:205mm/s | Feed Motor:300mm/s (D353) |
| 6161 21 | Bank2: Feed Motor:154mm/s | Feed Motor:300mm/s (D353) |
| 6161 22 | Bank2: Feed Motor:115mm/s | Feed Motor:300mm/s (D353) |
| 6161 23 | Bank2: Feed Motor:77mm/s | Feed Motor:300mm/s (D353) |
| 6161 25 | Bank1:Tray Lock Solenoid | Tray Lock Solenoid (D351/ D352 or D387) |
| 6161 26 | Bank2:Tray Lock Solenoid | Tray Lock Solenoid (D353) |

| 6161 | Display | Description |
|---|---|---|
| 6161 30 | Bank:Tray3: PU Solenoid | Pick-up Solenoid (D351/ D352 or D387) |
| 6161 31 | Bank:Tray4: PU Solenoid | Pick-up Solenoid (D351/ D353) |
| 6161 32 | Bank:Tray5: PU Solenoid | Pick-up Solenoid (D353) |
| 6161 35 | Bank:Tray3: Feed Clutch | Pick-up Solenoid (D351/ D352 or D387) |
| 6161 36 | Bank:Tray4: Feed Clutch | Pick-up Solenoid (D351/ D353) |
| 6161 37 | Bank:Tray5: Feed Clutch | Pick-up Solenoid (D353) |

## 8.1.4 TEST PATTERN PRINTING

Printing Test pattern: SP2-109

Some of these test patterns are used for copy image adjustments but most are used primarily for design testing.

Note

- Do not operate the machine until the test pattern is printed out completely. Otherwise, an SC occurs.

1. Enter the SP mode and select **SP2-109-003**.
2. Enter the number for the test pattern that you want to print and press [#].
3. When you want to select the single color of Magenta, Yellow or Cyan for printing a test pattern, select the color with SP2-109-005 (2: Magenta, 3: Yellow, 4: Cyan).
4. When you want to change the density of printing a test pattern, select the density with SP2-109-006 to -009 for each color.

   Note

   - If you select "0" with SP2-109-006 to -009, the color to be adjusted to "0" does not come up on a test pattern.
5. When you are prompted to confirm your selection, touch "Yes" to select the test pattern for printing.
6. Touch "Copy Window" to open the copy window, then select the settings for the test print (paper size etc.).

   Note

   - If you want to use black and white printing, touch "Black & White" on the LCD. If you want to use color printing, touch "Full Colour" on the LCD.
7. Press the "Start" key to start the test print.
8. After checking the test pattern, touch "SP Mode" on the LCD to return to the SP mode display.
9. Reset all settings to the default values.
10. Touch "Exit" twice to exit SP mode.

| No. | Pattern | No. | Pattern |
|---|---|---|---|
| 0 | None | 12 | 2-dot pattern |
| 1 | 1-dot line pattern (Vertical) | 13 | 4-dot pattern |
| 2 | 2-dot line pattern (Vertical) | 14 | 1-dot trimming pattern |
| 3 | 1-dot line pattern (Horizontal) | 15 | Cross stitch: sub-scan |
| 4 | 2-dot line pattern (Horizontal) | 16 | Cross stitch: main-scan |
| 5 | 1-dot grid pattern (Vertical) | 17 | Belt pattern (Horizontal) |
| 6 | 1-dot grid pattern (Horizontal) | 18 | Belt pattern (Vertical) |
| 7 | 1-dot grid pattern (Fine) | 19 | Checkered flag |
| 8 | 1-dot grid pattern (Rough) | 20 | Gray scale (Vertical) |
| 9 | 1-dot slant pattern (Fine) | 21 | Gray scale (Horizontal) |
| 10 | 1-dot slant pattern (Rough) | 22 | Dual beam density pattern |
| 11 | 1-dot pattern | 23 | Solid |

# 8.2 PRINTER SERVICE MODE

## 8.2.1 SP1-XXX (SERVICE MODE)

| **1001** | **Bit Switch** | | | |
|---|---|---|---|---|
| 001 | Bit Switch 1 | | 0 | 1 |
| | bit 0 | DFU | - | - |
| | bit 1 | DFU | - | - |
| | bit 2 | DFU | - | - |
| | bit 3 | **No I/O Timeout** | 0: Disable | 1: Enable |
| | | Enable: The MFP I/O Timeout setting will have no effect. I/O Timeouts will never occur. | | |
| | bit 4 | **SD Card Save Mode** | 0: Disable | 1: Enable |
| | | Enable: Print jobs will be saved to an SD Card in the GW SD slot (☛ “Card Save Function” in the System Maintenance Reference of the Field Service Manual). | | |
| | bit 5 | DFU | - | - |
| | bit 6 | DFU | - | - |
| | bit 7 | **[RPCS,PCL]: Printable area frame border** | 0: Disable | 1: Enable |
| | | Enable: The machine prints all RPCS and PCL jobs with a border on the edges of the printable area. | | |

| **1001** | **Bit Switch** | | | |
|---|---|---|---|---|
| 002 | Bit Switch 2 | | 0 | 1 |
| | bit 0 | DFU | - | - |
| | bit 1 | DFU | - | - |
| | bit 2 | **Applying a collation Type** | Shift Collate | Normal Collate |
| | | A collation type (shift or normal) will be applied to all jobs that do not already have a 'Collate Type' configured.<br>Note<br>▪ If #5-0 is enabled, this Bit Switch has no effect. | | |
| | bit 3 | **[PCL5e/c,PS]: PDL Auto Switching** | 0: Enable | 1: Disable |
| | | Disable: The MFPs ability to change the PDL processor mid-job.<br>Some host systems submit jobs that contain both PS and PCL5e/c. If Auto PDL switching is disabled, these jobs will not be printed properly. | | |
| | bit 4 | DFU | - | - |
| | bit 5 | DFU | - | - |
| | bit 6 | DFU | - | - |
| | bit 7 | DFU | - | - |

| **1001** | **Bit Switch** | | | |
|---|---|---|---|---|
| 003 | Bit Switch 3 | | 0 | 1 |
| | bit 0 | DFU | - | - |
| | bit 1 | DFU | - | - |
| | bit 2 | **[PCL5e/c]: Legacy HP compatibility** | 0: Disable | 1: Enable |
| | | Enable: Uses the same left margin as older HP models such as HP4000/HP8000.<br>In other words, the left margin defined in the job (usually "<ESC>*r0A") will be changed to "<ESC>*r1A" | | |
| | bit 3 | DFU | - | - |
| | bit 4 | DFU | - | - |
| | bit 5 | DFU | - | - |
| | bit 6 | DFU | - | - |
| | bit 7 | DFU | - | - |

| **1001** | **Bit Switch** | | |
|---|---|---|---|
| 004 | Bit Switch 4 **DFU** | - | - |

| **1001** | **Bit Switch** | | | |
|---|---|---|---|---|
| 005 | Bit Switch 5 | | 0 | 1 |
| | bit 0 | **Show "Collate Type", "Staple Type" and "Punch Type" buttons on the operation panel.** | Disable | Enable |
| | | If enabled, users will be able to configure a Collate Type, Staple Type, and Punch Type from the operation panel. The available types will depend on the device and configured options.<br>After enabling the function, the settings will appear under:<br>"User Tools > Printer Features > System" | | |
| | bit 1 | DFU | - | - |
| | bit 2 | DFU | - | - |
| | bit 3 | **[PS] PS Criteria** | Pattern3 | Pattern1 |
| | | Change the number of PS criterion used by the PS interpreter to determine whether a job is PS data or not.<br>Pattern3: includes most PS commands.<br>Pattern1: A small number of PS tags and headers | | |
| | bit 4 | **Increase max number of the stored jobs to 1000 jobs.** | Disable (100) | Enable (1000) |
| | | Enable: Changes the maximum number of jobs that can be stored on the HDD via Job Type settings to 1000. The default is 100. | | |
| | bit 5 | **Face-up output** | Disable | Enable |
| | | Enable: All print jobs will be output face-up in the destination tray. | | |
| | bit 6 | DFU | - | - |
| | bit 7 | DFU | - | - |

| **1001** | **Bit Switch** | | |
|---|---|---|---|
| 006 | Bit Switch 6 **DFU** | - | - |

| **1001** | **Bit Switch** | | |
|---|---|---|---|
| 007 | Bit Switch 7 **DFU** | - | - |

| **1001** | **Bit Switch** | | | |
|---|---|---|---|---|
| 008 | Bit Switch 8 | | 0 | 1 |
| | bit 0 | DFU | - | - |
| | bit 1 | DFU | - | - |
| | bit 2 | DFU | - | - |
| | bit 3 | **[PCL,PS]: Allow BW jobs to print without requiring User Code** | Disable | Enable |
| | | Enable: BW jobs submitted without a user code will be printed even if usercode authentication is enabled.<br>Note<br>▪ Color jobs will not be printed without a valid user code. | | |
| | bit 4 | DFU | - | - |
| | bit 5 | DFU | - | - |
| | bit 6 | **[PS]: Orientation Auto Detect Function** | Enable | Disable |
| | | Disable: Automatically chooses page orientations of PostScript jobs (Landscape or Portrait) based on the content printed on the page. | | |
| | bit 7 | **[PDF]: Orientation Auto Detect Function** | Enable | Disable |
| | | Automatically chooses page orientations of PDF jobs (Landscape or Portrait) based on the content printed on the page. | | |

| | |
|---|---|
| **1003** | [Clear Setting] |
| 1003 1 | Initialize Printer System |
| | Initializes settings in the “System” menu of the user mode. |
| 1003 3 | Delete Program |

| | |
|---|---|
| **1004** | [Print Summary] |
| 1004 1 | Print Summary |
| | Prints the service summary sheet (a summary of all the controller settings). |

| | |
|---|---|
| **1005** | [Display Version] |
| 1005 1 | Disp. Version |
| | Displays the version of the controller firmware. |

| | | | |
|---|---|---|---|
| **1006** | [Sample/Locked Print] | *CTL | **0**: Linked, 1: On |
| 1006 1 | Enables and disables the document server. When you select “0,” the document server is enabled or disabled in accordance with Copy Service Mode SP5-967. When you select “1,” the document server is enabled regardless of Copy Service Mode SP5-967. | | |

| | | | |
|---|---|---|---|
| **1101** | [Data Recall] | | |
| | Recalls a set of gamma settings. This can be either a) the factory setting, b) the previous setting, or c) the current setting. | | |
| 1101 1 | Factory | *CTL | |
| 1101 2 | Previous | | |
| 1101 3 | Current | | |
| 1101 4 | ACC | | |

| | |
|---|---|
| **1102** | [Resolution Setting] |
| | Selects the printing mode (resolution) for the printer gamma adjustment. |
| 1102 1 | **2400x600 Photo**, 1800x600 Photo, 600 x 600 Photo, 2400x600 Text, 1800x600, Text, 600x600 Text |

| | |
|---|---|
| **1103** | [Test Page] |
| | Prints the test page to check the color balance before and after the gamma adjustment. |
| 1103 1 | Color Gray Scale |
| 1103 2 | Color Pattern |

| | | | |
|---|---|---|---|
| **1104** | [Gamma Adjustment] | | |
| | Adjusts the printer gamma for the mode selected in the “Mode Selection” menu. | | |
| 1104 1 | Black: Highlight | *CTL | [0 to 30 / **15** / 1/step ] |
| 1104 2 | Black: Shadow | | |
| 1104 3 | Black: Middle | | |
| 1104 4 | Black: IDmax | | |
| 1104 21 | Cyan: Highlight | | |
| 1104 22 | Cyan: Shadow | | |
| 1104 23 | Cyan: Middle | | |
| 1104 24 | Cyan: IDmax | | |
| 1104 41 | Magenta: Highlight | | |
| 1104 42 | Magenta: Shadow | | |
| 1104 43 | Magenta: Middle | | |
| 1104 44 | Magenta: IDmax | | |
| 1104 61 | Yellow: Highlight | | |
| 1104 62 | Yellow: Shadow | | |
| 1104 63 | Yellow: Middle | | |
| 1104 64 | Yellow: IDmax | | |

| | |
|---|---|
| **1105** | [Save Tone Control Value] |
| | Stores the print gamma adjusted with the “Gamma Adj.” menu item as the current setting. Before the machine stores the new “current setting", it moves the data currently stored as the “current setting” to the “previous setting” memory storage location. |
| 1105 1 | Save Tone Control Value |

| | | | |
|---|---|---|---|
| **1106** | [Toner Limit] | | |
| | Adjusts the maximum toner amount for image development. | | |
| 1106 1 | Toner Limit Value | *CTL | [100 to 400 / **260** / 1 %/step ] |

# 8.3 SCANNER SP MODE

## 8.3.1 SP1-XXX (SYSTEM AND OTHERS)

| | | | |
|---|---|---|---|
| **1004** | **[Compression Type]** | | |
| | Selects the compression type for binary picture processing. | | |
| 1004 1 | Compression Type | *CTL | [1 to 3 / **1** / 1/step ]<br>1: MH, 2: MR, 3: MMR |

| | | | |
|---|---|---|---|
| **1005** | **[Erase margin]** | | |
| | Creates an erase margin for all edges of the scanned image.<br>If the machine has scanned the edge of the original, create a margin. This SP is activated only when the machine uses TWAIN scanning. | | |
| 1005 1 | Range from 0 to 5 mm | *CTL | [0 to 5 / **0** / 1 mm/step ] |

| | | | |
|---|---|---|---|
| **1009** | **[Remote scan disable]** | *CTL | [0 or 1 / **0** / - ]<br>0: enable, 1: disable |
| 1009 1 | Enable or disable remote scan. | | |

| | | | |
|---|---|---|---|
| **1010** | **[Non Display Clear Light PDF]** | *CTL | [0 or 1 / **0** / - ]<br>0: Display, 1: No display |
| 1010 1 | Enable or disable remote scan. | | |

| | | | |
|---|---|---|---|
| **1011** | **[Org count Disp]** | *CTL | [0 or 1 / **0** / - ] |
| 1011 1 | Selects the original counter display.<br>0: Displays remaining memory for the original scanning..<br>1: Displays original counter. | | |

| | | | |
|---|---|---|---|
| **1012** | **[UserInfo release]** | *CTL | [0 or 1 / **1** / - ]<br>0: No, 1: Yes |
| 1012 1 | Clear the following settings:<br>Address, Sender, Text / Subject, Filename | | |

| | | | |
|---|---|---|---|
| **1013** | **[Multimedia Function Setting]** | *CTL | [0 or 1 / **0** / - ]<br>0: OFF, 1: ON |
| 1013 1 | On or off multimedia function | | |

## 8.3.2 SP2-XXX (SCANNING-IMAGE QUALITY)

| | | | |
|---|---|---|---|
| **2021** | **[Compression Level (Gray-scale)]** | | |
| | Selects the compression ratio for grayscale processing mode (JPEG) for the three settings that can be selected at the operation panel. | | |
| 2021 1 | Level 3 (Middle Image Quality) | *CTL | [5 to 95 / **40** / 1 /step ] |
| 2021 2 | Level 2 (High Image Quality) | | [5 to 95 / **50** / 1 /step ] |
| 2021 3 | Level 4 (Low Image Quality) | | [5 to 95 / **30** / 1 /step ] |
| 2021 4 | Level 1 (Highest Image Quality) | | [5 to 95 / **60** / 1 /step ] |
| 2021 5 | Level 5 (Lowest Image Quality) | | [5 to 95 / **20** / 1 /step ] |

| | | | |
|---|---|---|---|
| **2024** | **[Compression ratio of ClearLight PDF]** | | |
| | Selects the compression ratio for clearlight PDF for the two settings that can be selected at the operation panel. | | |
| 2024 1 | Compression Ratio (Normal image) | *CTL | [5 to 95 / **25** / 1 /step ] |
| 2024 2 | Compression Ratio (High comp image) | | [5 to 95 / **20** / 1 /step ] |

# 1000-SHEET FINISHER
# B408

| 1000 SHEET FINISHER SR790 REVISION HISTORY | | |
|---|---|---|
| **Page** | **Date** | **Added/Updated/New** |
| | | None |

# 1000-SHEET FINISHER B408

## TABLE OF CONTENTS


**1. REPLACEMENT AND ADJUSTMENT ..... 1**
1.1 MAIN PCB ..... 1
1.2 STAPLER UNIT ..... 2
1.3 MOTORS ..... 3
1.3.1 SHIFT MOTOR ..... 3
1.3.2 STAPLER MOTOR ..... 3
1.3.3 UPPER TRANSPORT MOTOR AND EXIT MOTOR ..... 4
1.3.4 LOWER TRANSPORT MOTOR ..... 4
1.4 MOTORS AND SENSORS ..... 5
1.4.1 PREPARATION ..... 5
1.4.2 STACK HEIGHT SENSOR ..... 6
1.4.3 STAPLER TRAY PAPER SENSOR ..... 6
1.4.4 LOWER TRAY LIFT MOTOR ..... 7
1.4.5 STACK FEED-OUT MOTOR ..... 7

**2. TROUBLESHOOTING ..... 8**
2.1 JAM DETECTION ..... 8

**3. SERVICE TABLES ..... 9**
3.1 DIP SWITCH SETTINGS ..... 9

**4. DETAILED DESCRIPTIONS ..... 10**
4.1 GENERAL LAYOUT ..... 10
4.2 ELECTRICAL COMPONENT LAYOUT ..... 11
4.3 ELECTRICAL COMPONENT DESCRIPTION ..... 13
4.4 DRIVE LAYOUT ..... 15
4.5 JUNCTION GATES ..... 16
Upper Tray Mode ..... 16
Sort/Stack Mode ..... 16
Staple Mode ..... 16
4.6 UPPER TRAY ..... 17
4.7 LOWER TRAY UP/DOWN MECHANISMS ..... 18
4.8 PAPER SHIFT MECHANISM ..... 19
4.9 JOGGER UNIT PAPER POSITIONING MECHANISM ..... 20
4.10 EXIT GUIDE PLATE ..... 21
4.11 STAPLER MECHANISM ..... 22
4.12 STAPLER UNIT MOVEMENT MECHANISM ..... 23
4.13 PAPER FEED-OUT MECHANISM ..... 24

# 1. REPLACEMENT AND ADJUSTMENT

**⚠CAUTION**

**Turn off the main power switch and unplug the machine before beginning any of the procedures in this section.**

**NOTE:** This manual uses the following symbols.
☛ : See or Refer to  : Screws  : Connector  : Clip ring
: E-ring

## 1.1 MAIN PCB

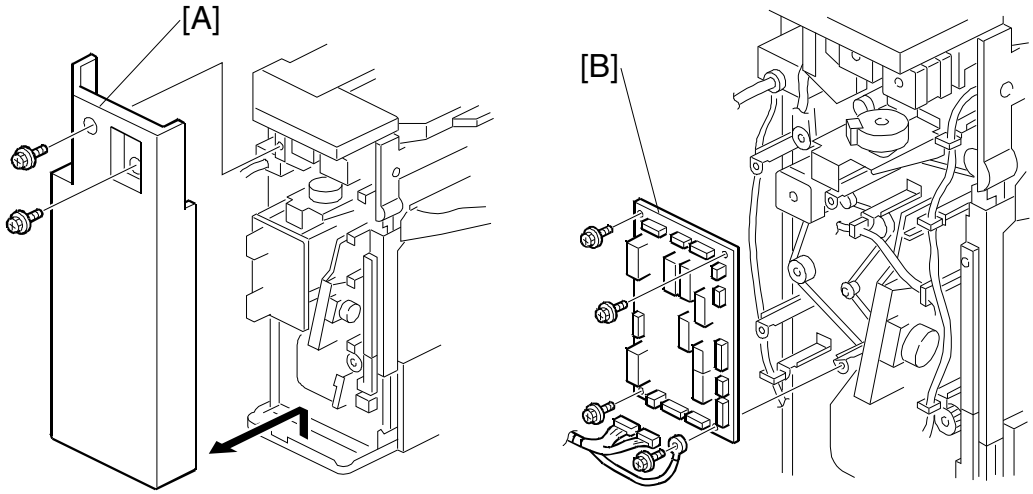


1. Rear cover [A] ( x 2)
2. Main PCB [B] ( x 4, All )

## 1.2 STAPLER UNIT

1. Side cover [A] (☞ x 2)
2. Open exit guide plate [B]
3. Upper side cover [C] (☞ x 2)

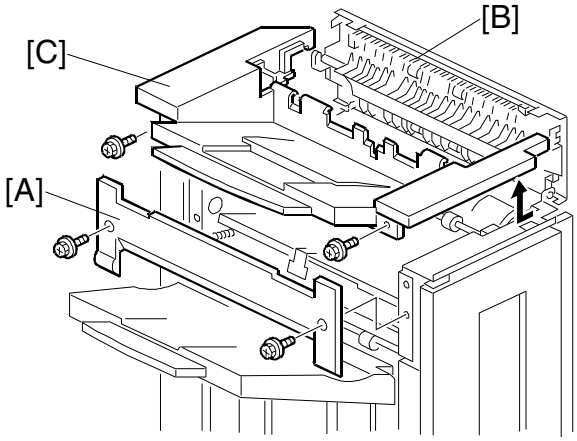


4. Front cover support plate [D] (☞ x 1)
5. Front cover [E]
6. Front inner cover [F] (☞ x 2)

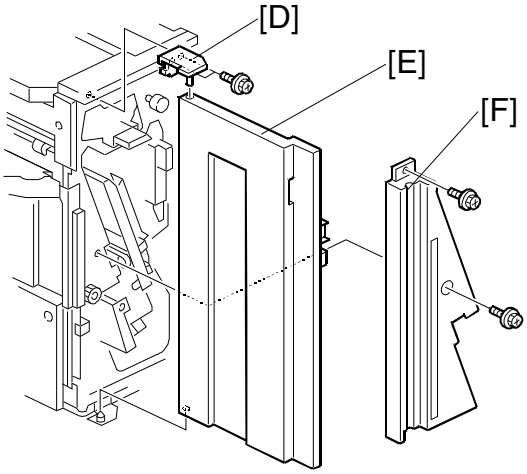


7. Harness [G]
8. Unhook the spring [H]
9. Turn the stapler unit [I] and take it out.
10. Bracket [J] (☞ x 2)

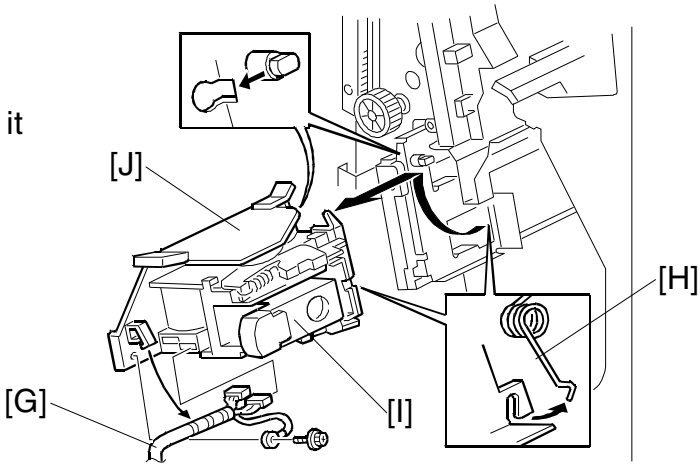

# 1.3 MOTORS

## 1.3.1 SHIFT MOTOR

1. Rear cover (☛1.1)
2. Shift motor [A] (🔩 x 2, 🖐 x 1)

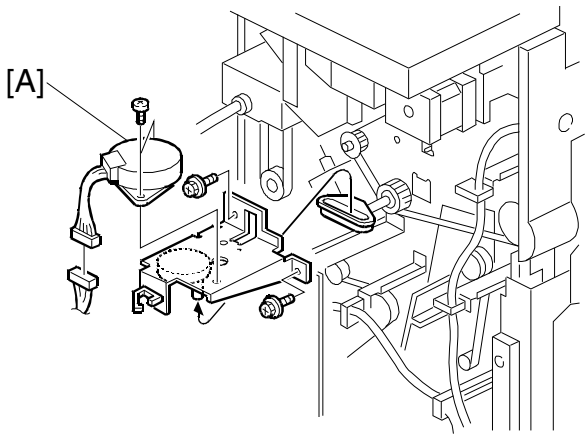


## 1.3.2 STAPLER MOTOR

1. Rear cover (☛1.1)
2. Stapler motor [A] (🔩 x 2, 🖐 x 1)

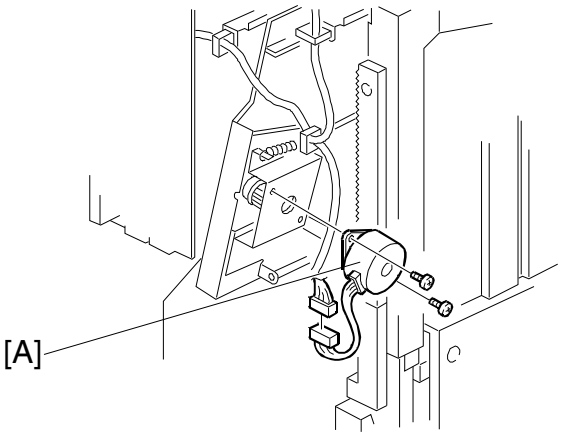

## 1.3.3 UPPER TRANSPORT MOTOR AND EXIT MOTOR

1. Rear cover (☛1.1)
2. Motor assembly [A] (🔩 x 4, 🔌 x 2)
3. Upper transport motor [B] (🔩 x 4)
4. Exit motor [C] (🔩 x 4)

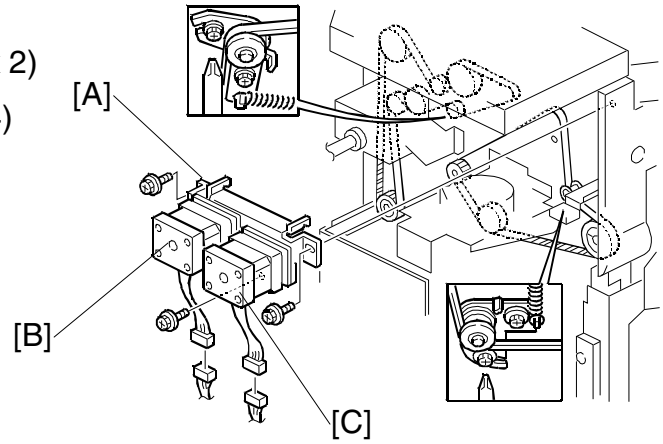


## 1.3.4 LOWER TRANSPORT MOTOR

1. Main PCB (☛1.1)
2. Lower transport motor [A] (🔩 x 2, 🔌 x 1)

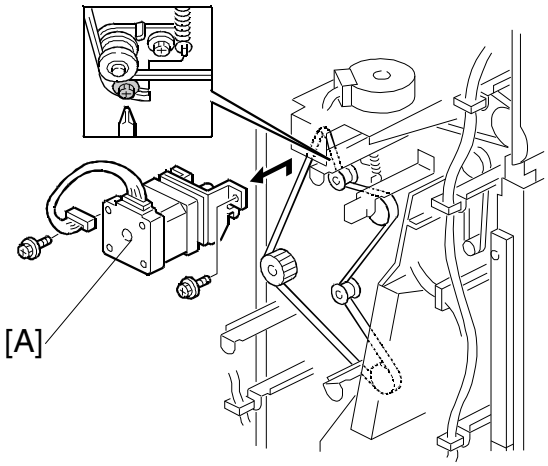

# 1.4 MOTORS AND SENSORS

## 1.4.1 PREPARATION

1. Front cover and inner cover (☛1.2)
2. Upper side cover [A] (🖉 x 2)
3. Upper tray [B] (🖉 x 1)

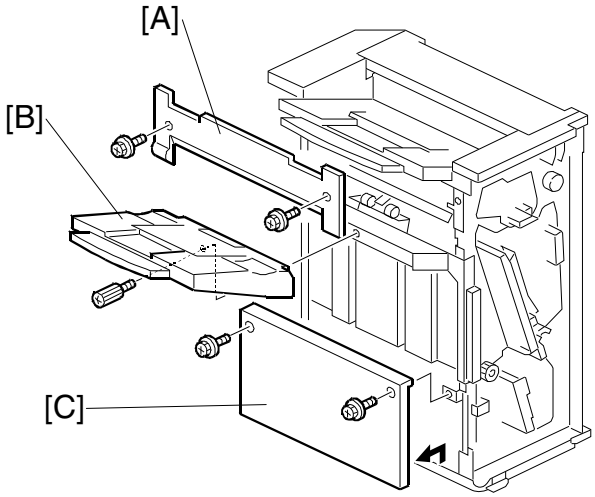


4. Lower side cover [C] (🖉 x 2)
5. Loosen the 2 screws [D].
6. Lower the lower tray guide plate [E].

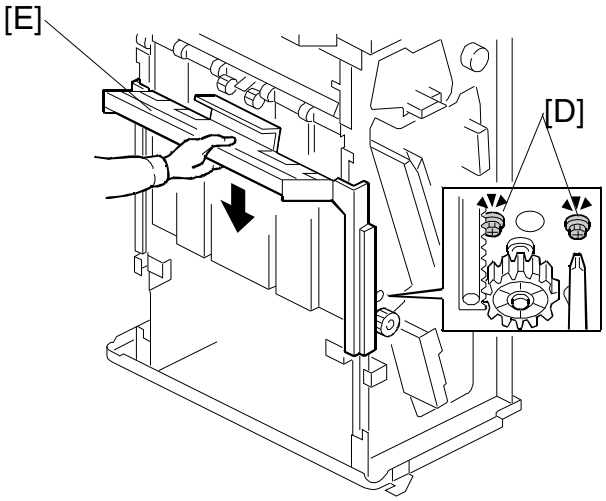


7. Guide plate [F] (🖉 x 4)

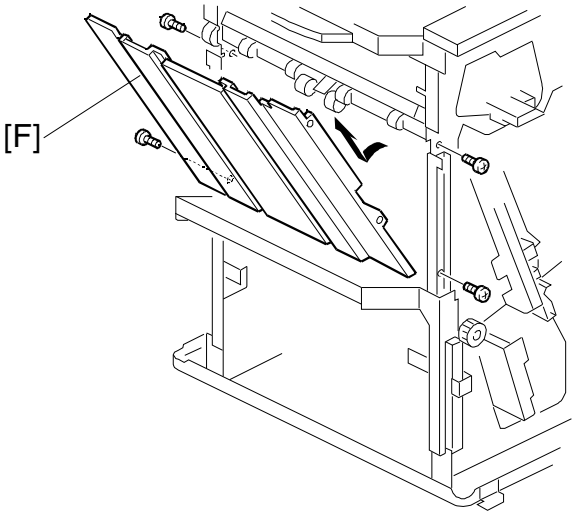

## 1.4.2 STACK HEIGHT SENSOR

1. Stack height sensor assembly [A] ( x 1)
2. Stack height sensor [B] ( x 1)

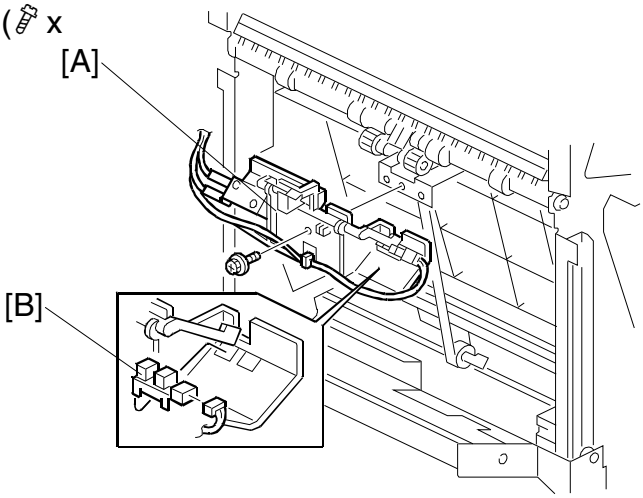


## 1.4.3 STAPLER TRAY PAPER SENSOR

1. Stapler tray paper sensor [A] ( x 1)

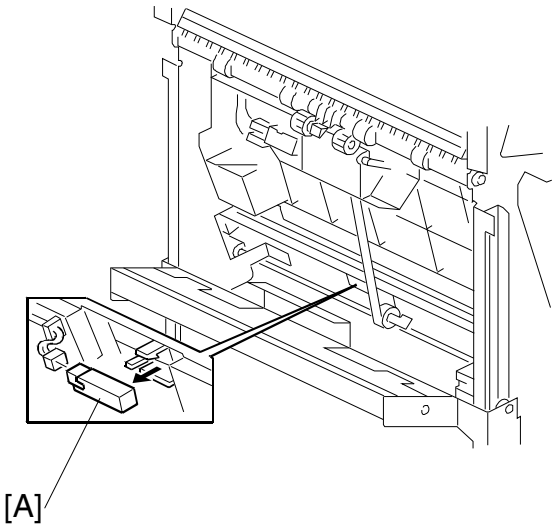

## 1.4.4 LOWER TRAY LIFT MOTOR

1. Lower tray lift motor [A] (☞ x 2, ☞ x 1)

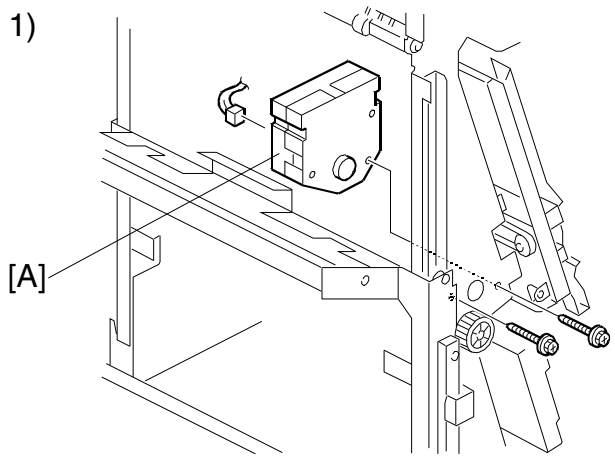


## 1.4.5 STACK FEED-OUT MOTOR

1. Stack feed-out motor [A] (☞ x 2, ☞ x 1)

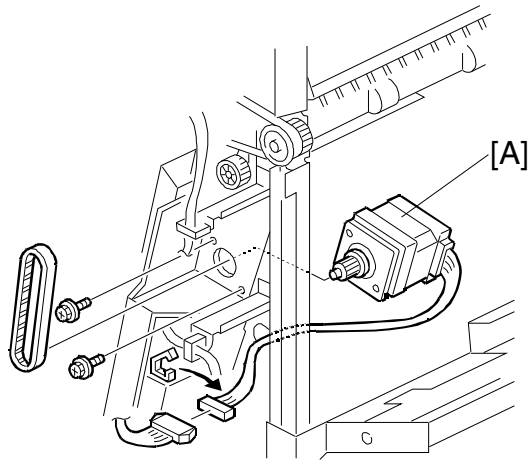

# 2. TROUBLESHOOTING

## 2.1 JAM DETECTION

| Mode | | Jam | Content |
|---|---|---|---|
| Shift | Staple | | |
| ✔ | ✔ | Entrance sensor:<br>On check | The entrance sensor does not turn on within the normal time after the main machine exit sensor turns on |
| ✔ | ✔ | Entrance sensor:<br>Off check | The entrance sensor does not turn off within the normal time after it turns on. |
| ✔ | | Lower tray exit sensor:<br>On check | The lower tray exit sensor does not turn on within the normal time after the entrance sensor turns off. |
| ✔ | | Tray exit sensor:<br>Off check | The tray exit sensor does not turn off within the normal time after it turns on. |
| | ✔ | Stapler tray entrance sensor:<br>On check | The stapler tray entrance sensor does not switch on within the normal time after the entrance sensor switched on. |
| | ✔ | Stapler tray entrance sensor:<br>Off check | The staple tray entrance sensor does not turn off within the normal time after it turns on. |
| | ✔ | Lower tray exit sensor:<br>On check | The lower exit sensor does not turn on after the feed-out pawl feeds out the outputs. |
| | ✔ | Lower tray exit sensor:<br>Off check | The lower exit sensor turns on when the feed-out pawl returns to its home position after feeding out the outputs. |

# 3. SERVICE TABLES

## 3.1 DIP SWITCH SETTINGS

The DIP switches should not be set to any combination other than those listed in the table below.

| SW100 | | Description |
|---|---|---|
| 1 | 2 | |
| 0 | 0 | Normal operation mode (Default) |
| 1 | 0 | Packing mode. |

- Before packing the machine, do the following: Set switch 1 to 1 then back to zero. The lower tray moves to the lowest position. Then turn off the main switch.
- After unpacking the machine, do the following: After turning the main switch back on, the lower tray returns to home position automatically.

# 4. DETAILED DESCRIPTIONS

## 4.1 GENERAL LAYOUT

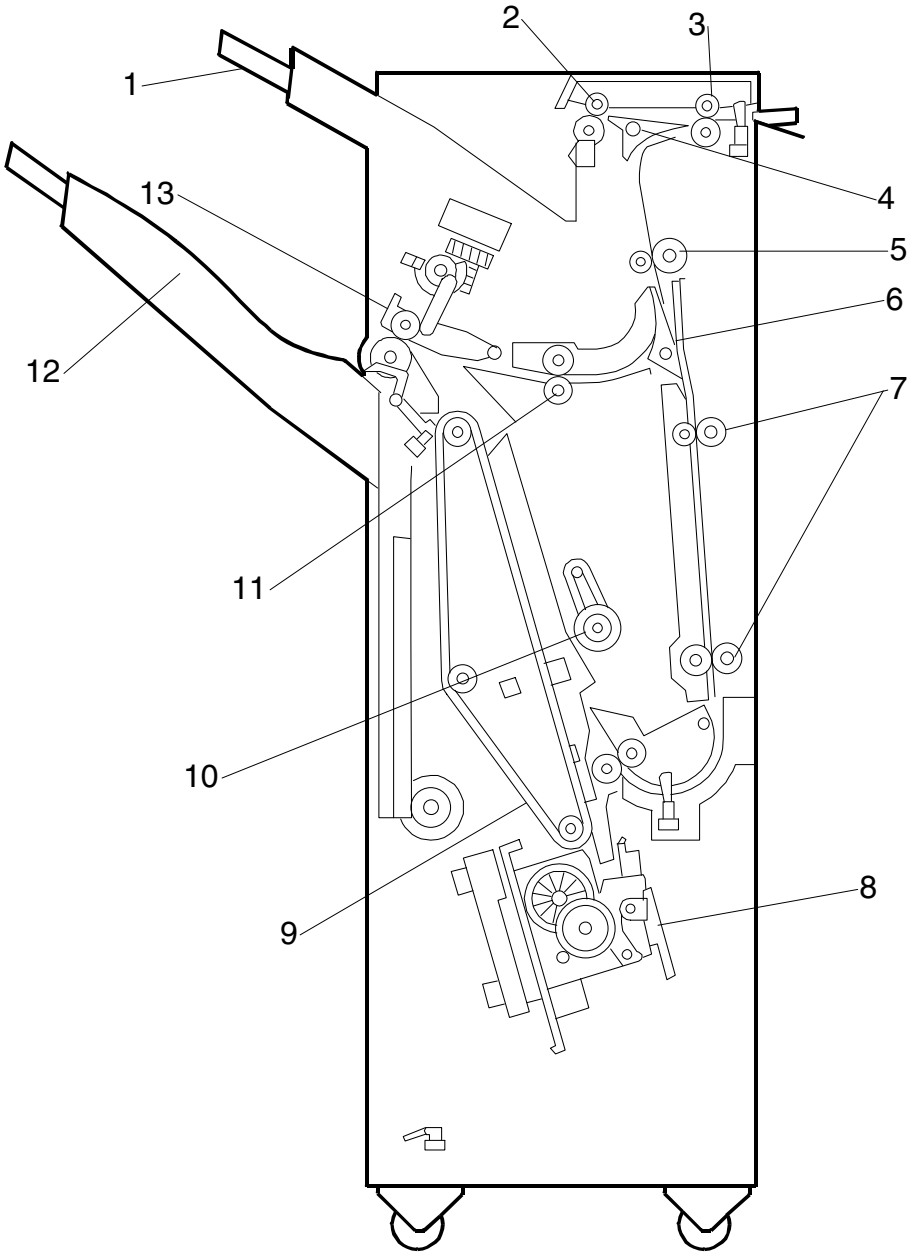


1. Upper Tray
2. Upper Tray Exit Roller
3. Entrance Roller
4. Tray Junction Gate
5. Upper Transport Roller
6. Stapler Junction Gate
7. Lower Transport Rollers
8. Stapler
9. Stack Feed-out Belt
10. Positioning Roller
11. Shift Roller
12. Lower Tray
13. Lower Tray Exit Roller

## 4.2 ELECTRICAL COMPONENT LAYOUT

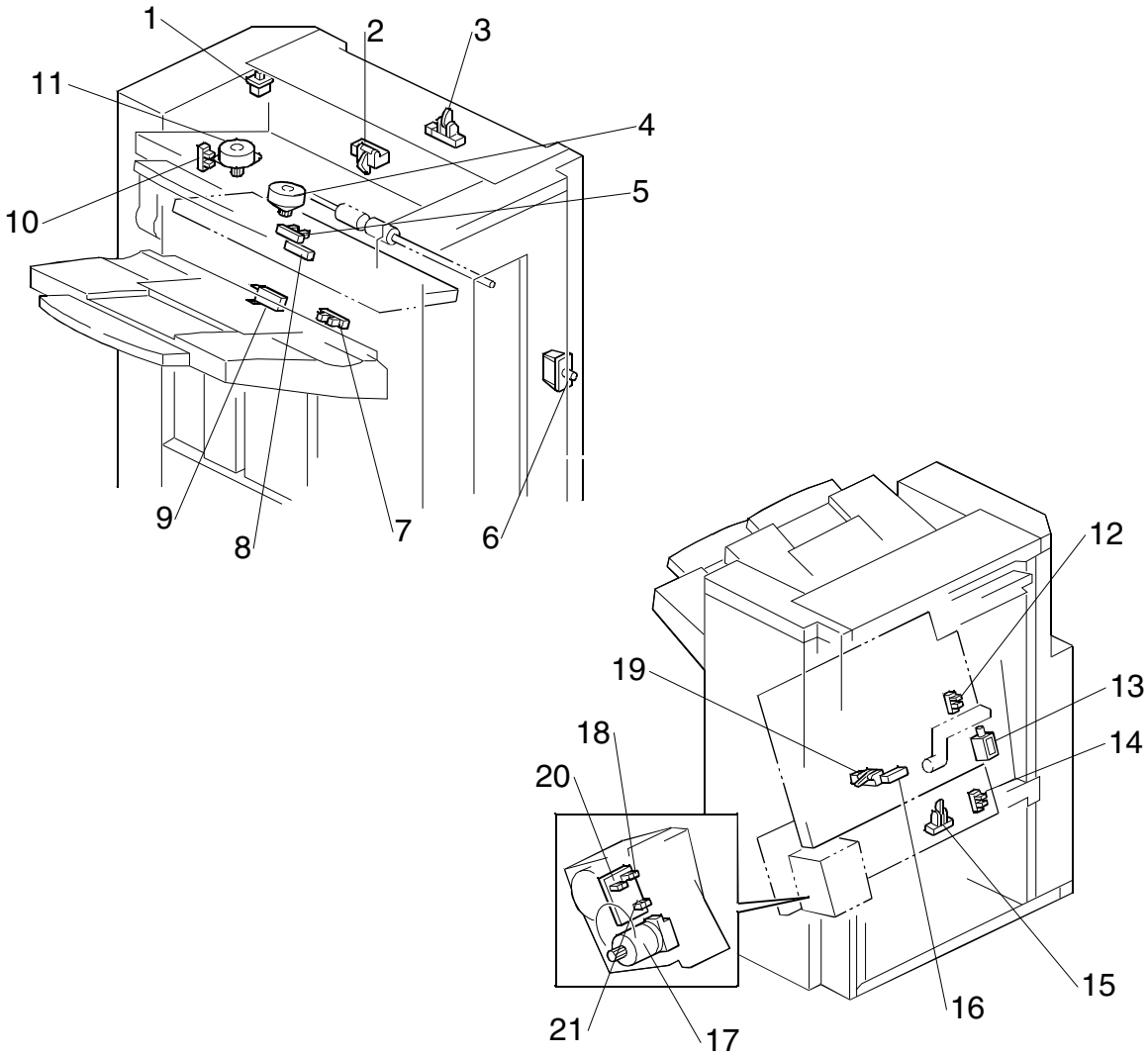


1. Upper Cover Switch
2. Paper Limit Sensor
3. Entrance Sensor
4. Exit Guide Plate Motor
5. Exit Guide Plate HP Sensor
6. Front Door Safety Switch
7. Stack Height Sensor
8. Lower Tray Exit Sensor
9. Lower Tray Upper Limit Switch
10. Shift HP Sensor
11. Shift Motor
12. Jogger Fence HP Sensor
13. Positioning Roller Solenoid
14. Stapler HP Sensor
15. Stapler Tray Entrance Sensor
16. Stapler Tray Paper Sensor
17. Stapler Hammer Motor
18. Staple Sheet Sensor
19. Stack Feed-out Belt HP Sensor
20. Stapler Rotation HP Sensor
21. Staple Sensor

ELECTRICAL COMPONENT LAYOUT

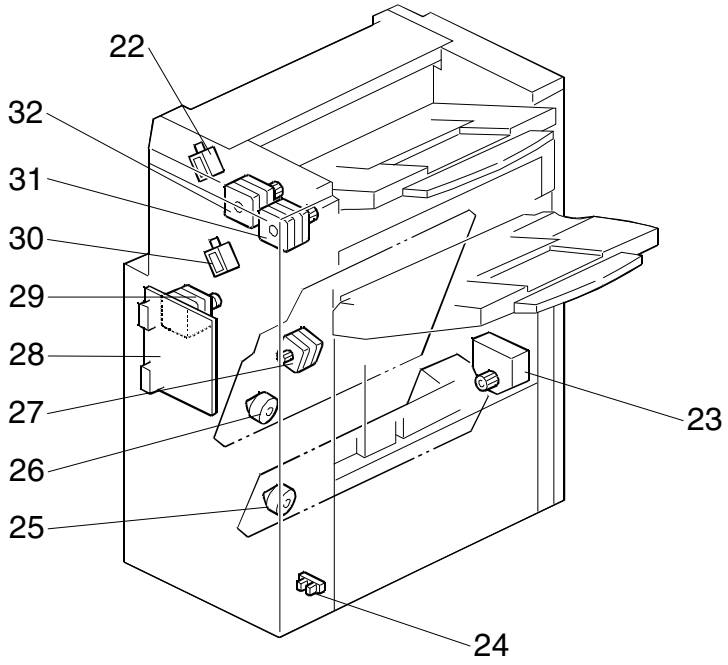


22. Tray Junction Gate Solenoid
23. Lower Tray Lift Motor
24. Lower Tray Lower Limit Sensor
25. Stapler Motor
26. Jogger Fence Motor
27. Stack Feed-out Motor
28. Main Board
29. Lower Transport Motor
30. Stapler Junction Gate Solenoid
31. Exit Motor
32. Upper Transport Motor

# 4.3 ELECTRICAL COMPONENT DESCRIPTION

| Symbol | Name | Function | Index No. |
|---|---|---|---|
| **Motors** | | | |
| M1 | Upper Transport | Drives the entrance roller and upper transport rollers. | 32 |
| M2 | Lower Transport | Drives the lower transport rollers and the positioning roller. | 29 |
| M3 | Jogger Fence | Drives the jogger fences. | 26 |
| M4 | Staple Hammer | Drives the staple hammer. | 17 |
| M5 | Stack Feed-out | Drives the stack feed-out belt. | 27 |
| M6 | Exit Guide Plate | Opens and closes the exit guide plate. | 4 |
| M7 | Exit | Drives the exit roller. | 31 |
| M8 | Lower Tray Lift | Moves the lower tray up or down. | 23 |
| M9 | Shift | Moves the shift roller from side to side. | 11 |
| M10 | Stapler | Moves the stapler unit from side to side. | 25 |
| | | | |
| **Sensors** | | | |
| S1 | Entrance | Detects copy paper entering the finisher and checks for misfeeds. | 3 |
| S2 | Paper Limit | Detects when the paper stack height in the upper tray is at its limit. | 2 |
| S3 | Jogger Fence HP | Detects when the jogger fence is at home position. | 12 |
| S4 | Shift HP | Detects when the shift roller is at home position. | 10 |
| S5 | Stack Feed-out Belt HP | Detects when the stack feed-out belt is at home position. | 19 |
| S6 | Stapler HP | Detects when the stapler is at home position. | 14 |
| S7 | Exit Guide Plate HP | Detects when the exit guide plate is at home position. | 5 |
| S8 | Stapler Tray Entrance | Detects copy paper entering the stapler tray and checks for misfeeds. | 15 |
| S9 | Lower Tray Exit | Checks for misfeeds. | 8 |
| S10 | Stack Height | Detects the top of the copy paper stack. | 7 |
| S11 | Lower Tray Lower Limit | Detects when the lower tray is at its lower limit position. | 24 |
| S12 | Stapler Tray Paper | Detects when there is copy paper in the stapler tray. | 16 |
| S13 | Staple Sheet | Detects the leading edge of the staple sheet. | 18 |
| S14 | Stapler Rotation HP | Detects when the staple hammer is at home position. | 20 |
| S15 | Staple | Detects whether there are staples in the staple cartridge. | 21 |
| | | | |
| **Solenoids** | | | |
| SOL1 | Tray Junction Gate | Drives the tray junction gate. | 22 |
| SOL2 | Stapler Junction Gate | Drives the stapler junction gate. | 30 |

ELECTRICAL COMPONENT DESCRIPTION

| Symbol | Name | Function | Index No. |
|---|---|---|---|
| SOL3 | Positioning Roller | Moves the positioning roller. | 13 |
| | | | |
| **Switches** | | | |
| SW1 | Lower Tray Upper Limit | Detects when the lower tray is at its upper limit position. | 9 |
| SW2 | Front Door Safety | Cuts the dc power when the front door is opened. | 6 |
| SW3 | Upper Cover | Cuts the dc power when the upper cover is opened. | 1 |
| | | | |
| **PCBs** | | | |
| PCB1 | Main | Controls the finisher and communicates with the copier/printer. | 28 |
| | | | |

## 4.4 DRIVE LAYOUT

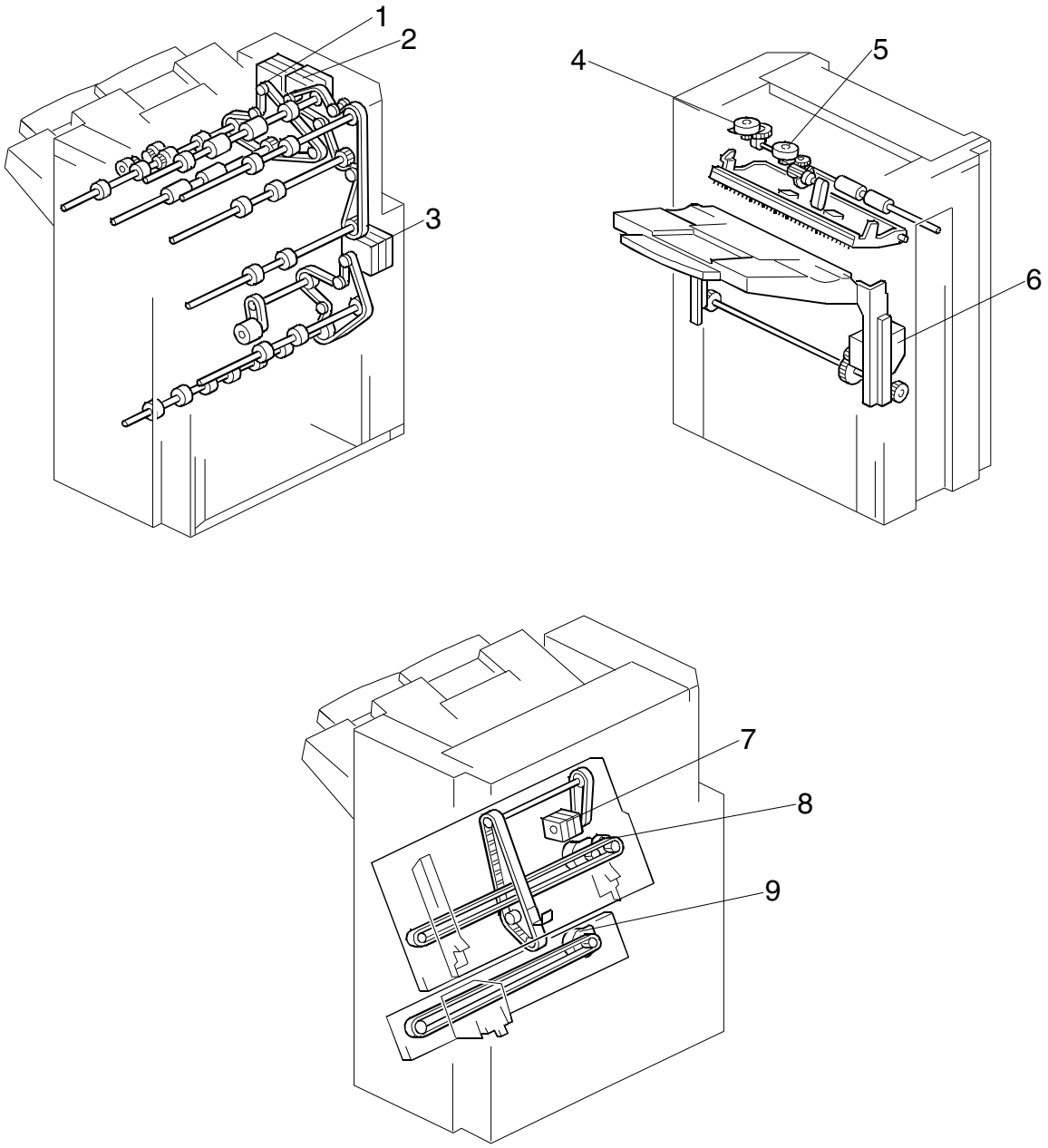


1. Exit Motor
2. Upper Transport Motor
3. Lower Transport Motor
4. Shift Motor
5. Exit Guide Plate Motor
6. Lower Tray Lift Motor
7. Stack Feed-out Motor
8. Jogger Motor
9. Stapler Motor

# 4.5 JUNCTION GATES

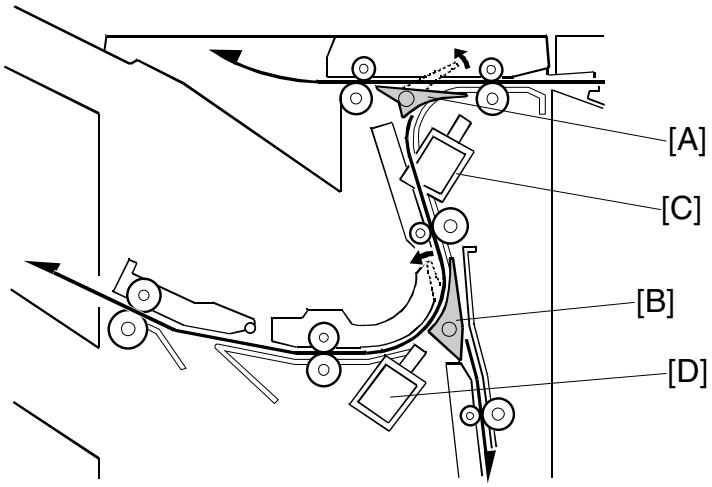


Depending on the finishing mode, the copies are directed up, straight through, or down by the combination of the tray junction gate [A] and stapler junction gate [B]. These gates are controlled by the tray junction gate solenoid [C] and stapler junction gate solenoid [D].

### *Upper Tray Mode*

The tray junction gate solenoid remains off. The copies go up to the upper tray.

### *Sort/Stack Mode*

The tray junction gate solenoid turns on and the stapler junction gate solenoid remains off. The copies are sent to the lower tray directly.

### *Staple Mode*

The tray junction gate solenoid and the stapler junction gate solenoid both turn on.

The copies go down to the jogger unit.

## 4.6 UPPER TRAY

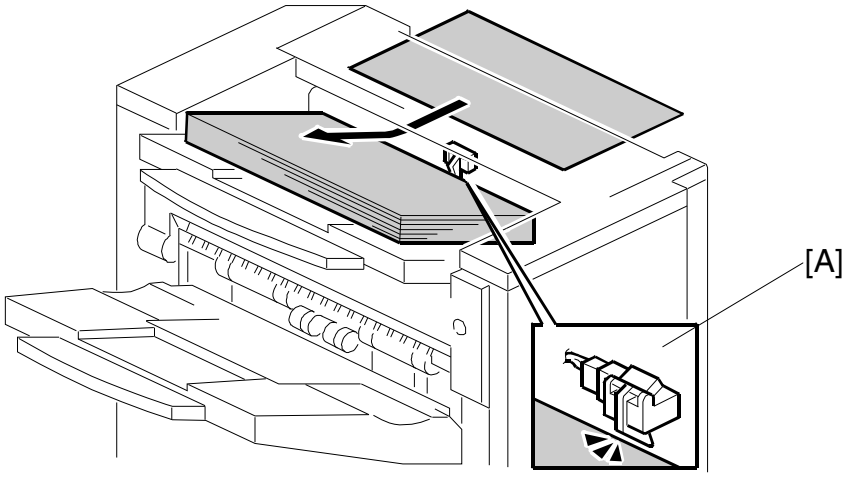


When the paper limit sensor [A] switches on during feed-out for each of three consecutive sheets of paper, paper overflow is detected.

# 4.7 LOWER TRAY UP/DOWN MECHANISMS

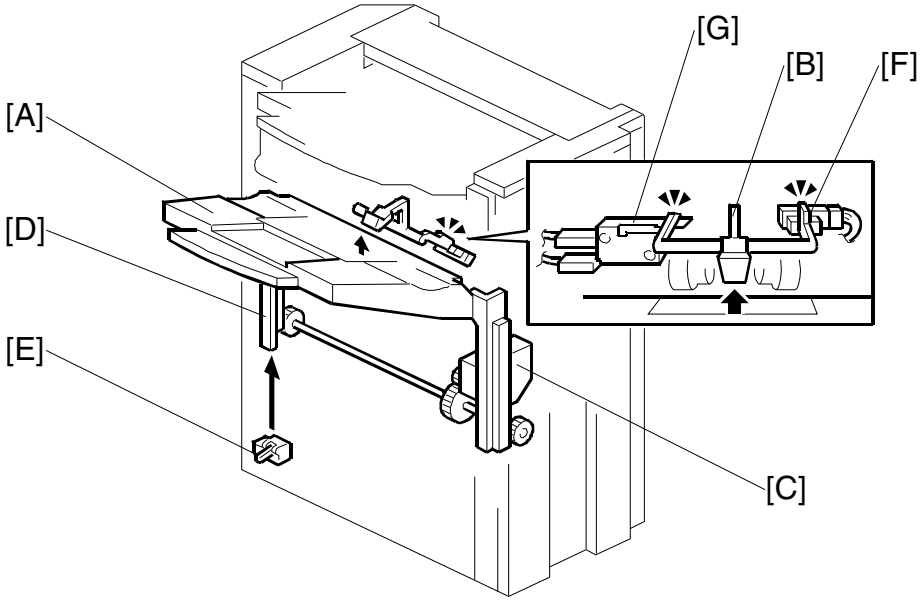


The vertical position of the lower tray [A] depends on the height of the copied paper stack on the lower tray. The stack height sensor feeler [B] contacts the top of the stack, and the lower tray lift motor [C] controls the tray height.

When the lower tray reaches its lowest possible position, the actuator [D] turns on the lower tray lower limit sensor [E], and copying stops.

### *Tray Up*

When the copy paper on the tray is removed, the stack height sensor [F] turns off and the tray lifts up. Then, the tray stops when the sensor turns on again (the tray pushes up the feeler).
If the stack height sensor fails, the lower tray upper limit switch [G] detects the tray and stops the motor. This is a safety measure against stack height sensor failure.

### *Sort/Stack Mode (Tray Down)*

Every five sheets of paper, the tray goes down until the sensor turns off again. Then, it goes up until the sensor is on again.

### *Staple Mode (Tray Down)*

After a stapled copy is fed out, the tray goes up for 220 ms and stops for 300 ms. Then, it goes down for 1 second, waits for 500 ms, then goes up until the sensor turns on.

## 4.8 PAPER SHIFT MECHANISM

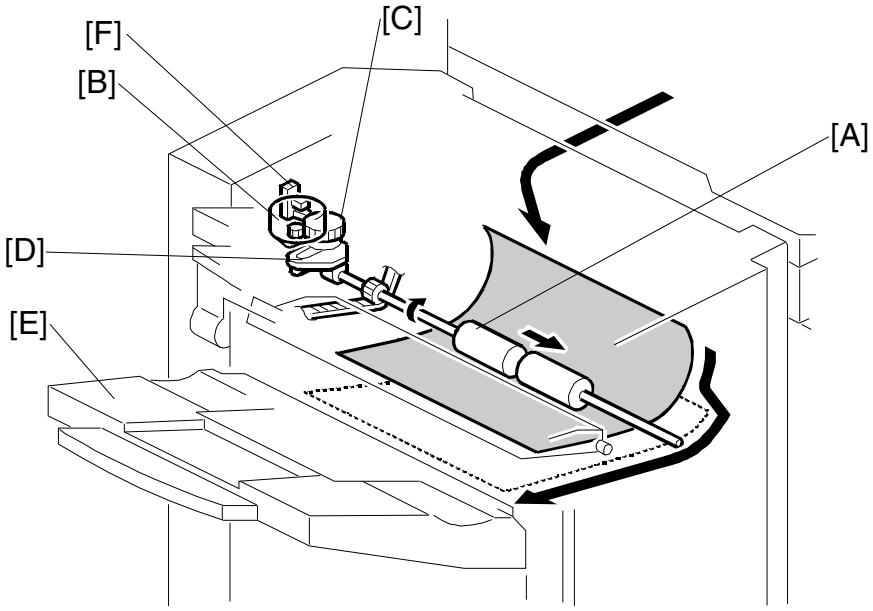




In the sort/stack mode, the shift roller [A] moves from side to side to separate the sets of copies.

The horizontal position of the shift roller is controlled by the shift motor [B] and the shift gear disk [C]. After the trailing edge of the copy passes the upper transport roller, the shift motor turns on, driving the shift gear disk and the link [D].

After the paper is delivered to the lower tray [E], the shift roller moves to its home position, which is detected by the shift HP sensor [F]. Then, when the trailing edge of the next copy passes the upper transport roller, the shift roller shifts again. This operation is done every sheet.

When the trailing edge of each page in the next set of copies passes the upper transport roller, the shift roller shifts in the opposite direction.

# 4.9 JOGGER UNIT PAPER POSITIONING MECHANISM

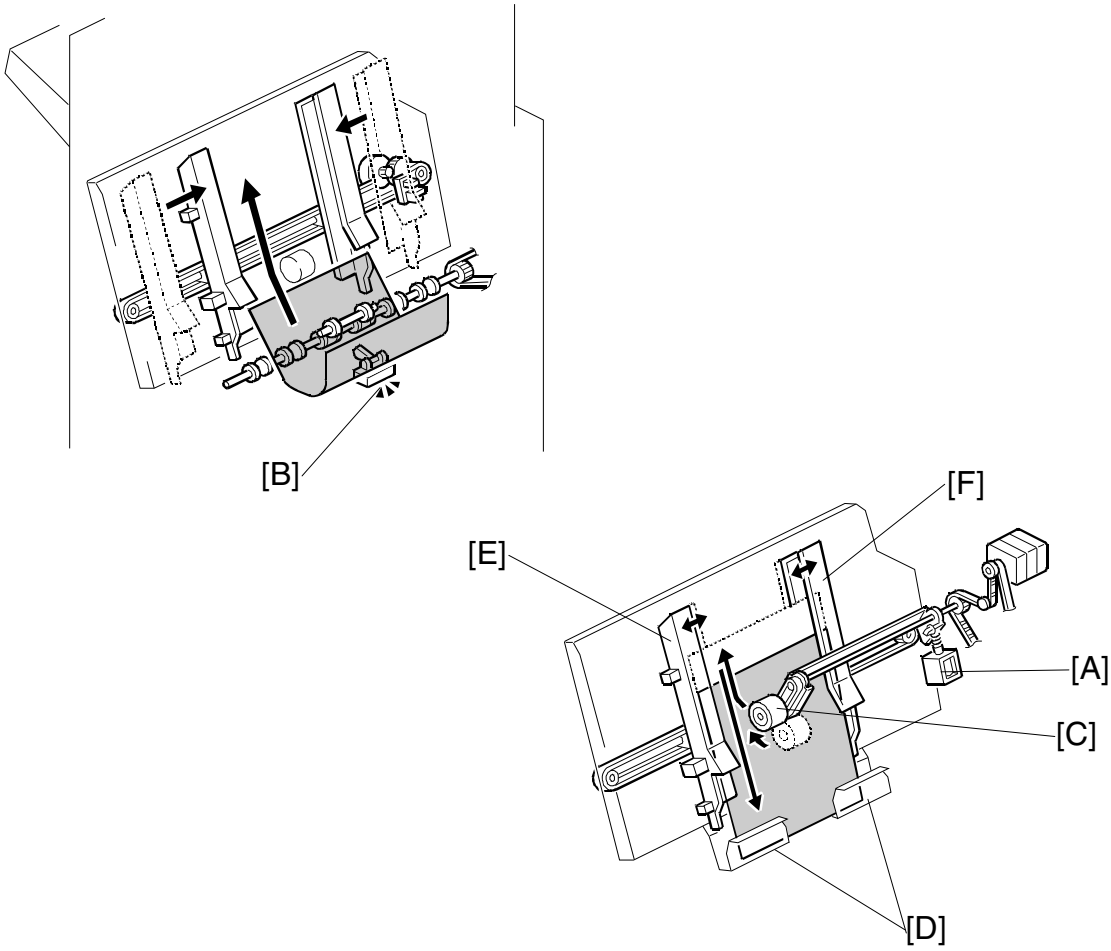


In staple mode, each sheet of copy paper is vertically and horizontally aligned when it arrives in the jogger unit.

For the vertical paper alignment, the positioning roller solenoid [A] turns on shortly after the stapler tray entrance sensor [B] turns off, and the positioning roller [C] pushes the copy against the bottom of the stack stopper [D].

For the horizontal paper alignment, the jogger front fence [E] and the rear fence [F] move to the waiting position, which is 18 mm away from the side of the paper. When aligning the paper vertically, the jogger fence moves in 14 mm from the waiting position. After the vertical position has been aligned, the jogger fence pushes the paper 4 mm against the rear fence to align the paper horizontally. Then the jogger fence moves back to the previous position.

# 4.10 EXIT GUIDE PLATE

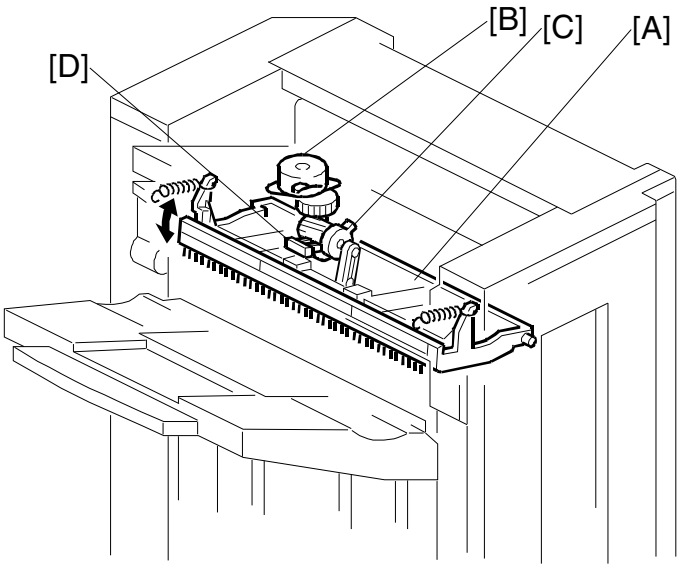




When stacking a large size of paper (such as A3, DLT) in the jogger unit, the leading edge of the paper reaches the exit rollers. To prevent the paper from running into the exit rollers and not being aligned correctly, the exit guide plate [A] is moved up to make a gap between the exit rollers. This operation is done for all paper sizes, but is only needed for the larger sizes.

The exit guide plate motor [B] and exit roller release cam [C] control the exit guide plate movement. When the exit guide plate motor starts, the cam turns and the exit guide plate moves up. When stapling is finished, the exit guide plate motor turns on again to close the exit guide plate. When the exit guide plate HP sensor [D] turns on, the motor stops.

# 4.11 STAPLER MECHANISM

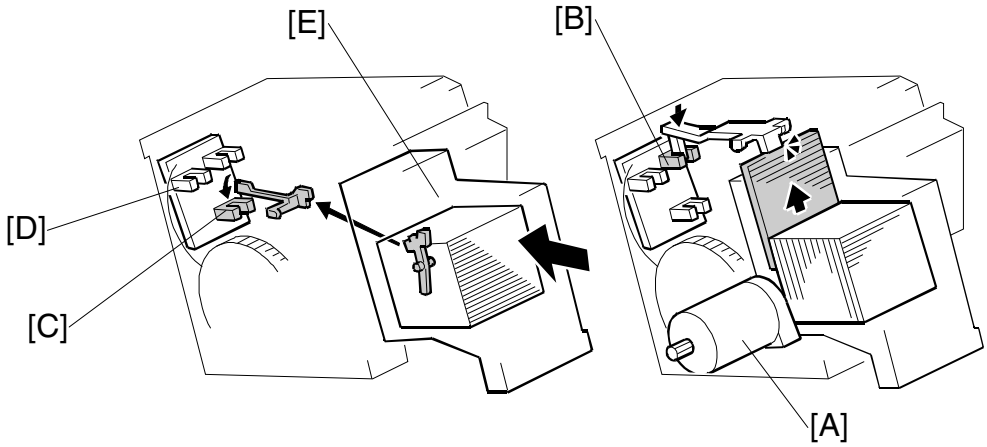


The staple hammer motor [A] drives the staple hammer.

The staple sheet sensor [B] detects the leading edge of the staple sheet at the stapling position to prevent the hammer from operating if there are no staples at the stapling position.

If there is no staple cartridge in the stapler unit or no staples in the staple cartridge, staple end is indicated on the operation panel. The stapler sensor [C] detects this.

The stapler rotation HP sensor [D] checks whether the staple hammer mechanism returns to home position after each stack has been stapled.

When excessive load is applied to the staple hammer motor, the copier detects a staple jam. When a staple jam has occurred, the jammed staple is inside the staple cartridge [E]. Therefore, the jammed staple can be removed easily after pulling out the staple cartridge.

## 4.12 STAPLER UNIT MOVEMENT MECHANISM

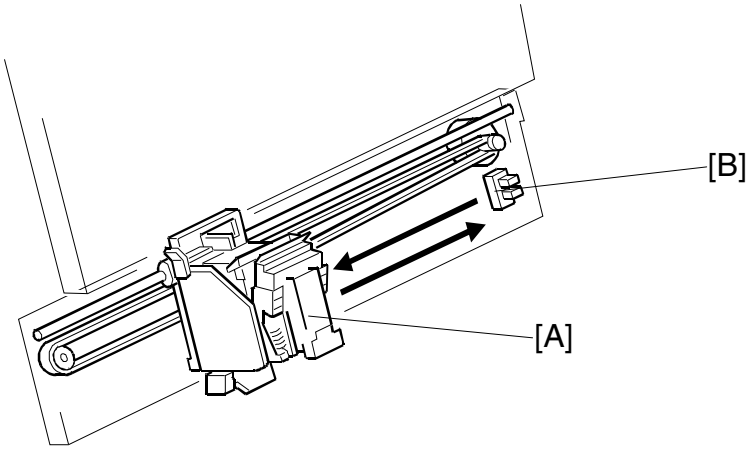


The stapler motor moves the stapler [A] from side to side. After the start key is pressed, the stapler moves from its home position to the stapling position.

If two-staple-position mode is selected, the stapler moves to the front stapling position first, then moves to the rear stapling position. However, for the next copy set, it staples in the reverse order (at the rear side first, then at the front side).

After the job is completed, the stapler moves back to its home position. The stapler HP sensor [B] detects this.

# 4.13 PAPER FEED-OUT MECHANISM

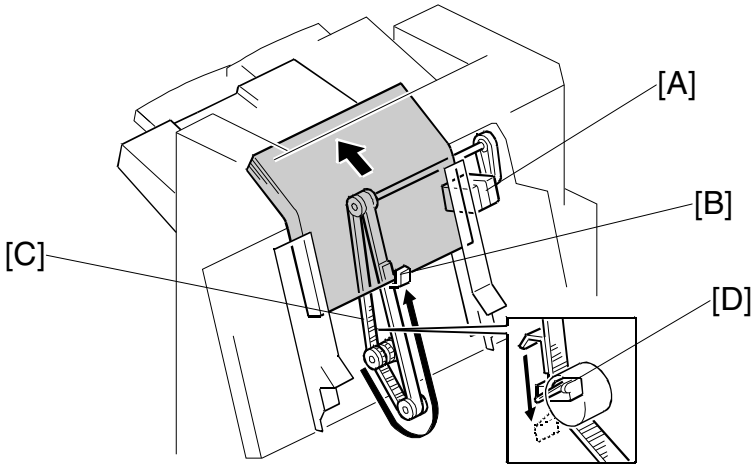


After the copies have been stapled, the stack feed-out motor [A] starts. The pawl [B] on the stack feed-out belt [C] transports the set of stapled copies up and feeds it to the shift roller. The shift roller takes over stack feed-out after the leading edge reaches this roller.

Just before the stapled stack passes through the lower tray exit sensor, the stack-feed-out motor turns off until the shift rollers have completely fed the stack out to the lower tray. Then, the stack-feed-out motor turns on again until the pawl [B] actuates the stack feed-out belt home position sensor [D].

# BOOKLET FINISHER
# B793

| BOOKLET FINISHER SR3000 REVISION HISTORY | | |
|---|---|---|
| **Page** | **Date** | **Added/Updated/New** |
| | | None |

# BOOKLET FINISHER B793

## TABLE OF CONTENTS


**1. REPLACEMENT AND ADJUSTMENT ..... 1**

1.1 COVERS ..... 1

1.1.1 FRONT/INNER/REAR COVERS ..... 1

1.1.2 UPPER COVERS ..... 2

1.2 MAIN BODY ..... 4

1.2.1 POSITIONING ROLLER ..... 4

1.2.2 SHIFT TRAY POSITION SENSOR, UPPER LIMIT SWITCH ..... 4

1.2.3 PROOF TRAY EXIT / FULL SENSOR ..... 5

1.2.4 FINISHER ENTRANCE SENSOR ..... 6

1.2.5 SHIFT TRAY EXIT SENSOR ..... 7

1.2.6 STAPLE TRAY PAPER SENSOR ..... 8

1.2.7 SHIFT TRAY MOTOR ..... 8

1.2.8 ENTRANCE MOTOR ..... 9

1.2.9 UPPER TRANSPORT MOTOR ..... 9

1.2.10 LOWER TRANSPORT MOTOR ..... 10

1.2.11 SHIFT MOTOR ..... 11

1.3 FOLDER ..... 12

1.3.1 STAPLE FOLDER UNIT ..... 12

1.3.2 FOLDER UNIT ..... 13

1.3.3 FOLDER UNIT EXIT SENSOR ..... 14

1.3.4 FOLDER UNIT ENTRANCE SENSOR ..... 15

1.3.5 STAPLER UNIT ..... 15

1.4 OTHERS ..... 26

1.4.1 MAIN BOARD ..... 26

1.5 DIP SWITCHES ..... 27

**2. DETAILED SECTION DESCRIPTIONS ..... 28**

2.1 COMPONENT LAYOUT ..... 28

2.1.1 MECHANICAL COMPONENT LAYOUT ..... 28

2.1.2 ELECTRICAL COMPONENT LAYOUT ..... 30

2.2 JUNCTION GATES ..... 39

2.3 PROOF TRAY.....40
2.4 SHIFT TRAY.....41
2.4.1 UP/DOWN MOTION.....41
2.4.2 SIDE-TO-SIDE MOTION.....42
2.5 BOOKLET TRAY.....43
2.6 JOGGER UNIT.....46
2.7 EXIT GUIDE PLATE, PAPER FEED OUT.....47
2.8 STAPLER UNIT MOVEMENT.....48
2.9 STACKING FOR BOOKLET STAPLING.....49
2.9.1 OVERVIEW.....49
2.9.2 8.5 X 14 (LEGAL) OR SHORTER.....49
2.9.3 LONGER THAN 8.5 X 14 INCHES.....50
2.10 MOVING THE STACK TO THE FOLDING POSITION.....52
2.11 FOLDER.....53
2.11.1 OVERVIEW.....53
2.11.2 FOLD PLATE.....53
2.11.3 FOLD ROLLERS.....54
2.12 PUNCH UNIT.....55
2.12.1 OVERVIEW OF OPERATION.....55
2.12.2 PAPER POSITION DETECTION.....57
2.12.3 PUNCH UNIT MOVEMENT.....58
2.12.4 PUNCH SELECTION AND FIRING.....58
2.12.5 PUNCH HOPPER MECHANISM.....59

# Read This First

## Safety and Symbols

### Replacement Procedure Safety

**⚠CAUTION**

- Turn off the main power switch and unplug the machine before beginning any of the replacement procedures in this manual.

When taking apart the bridge unit, first take the unit out of the copier.

### Symbols Used in this Manual

This manual uses the following symbols.

☛: See or Refer to

: Screws

: Connector

: Clip ring

: E-ring

# 1. REPLACEMENT AND ADJUSTMENT

## 1.1 COVERS

### 1.1.1 FRONT/INNER/REAR COVERS

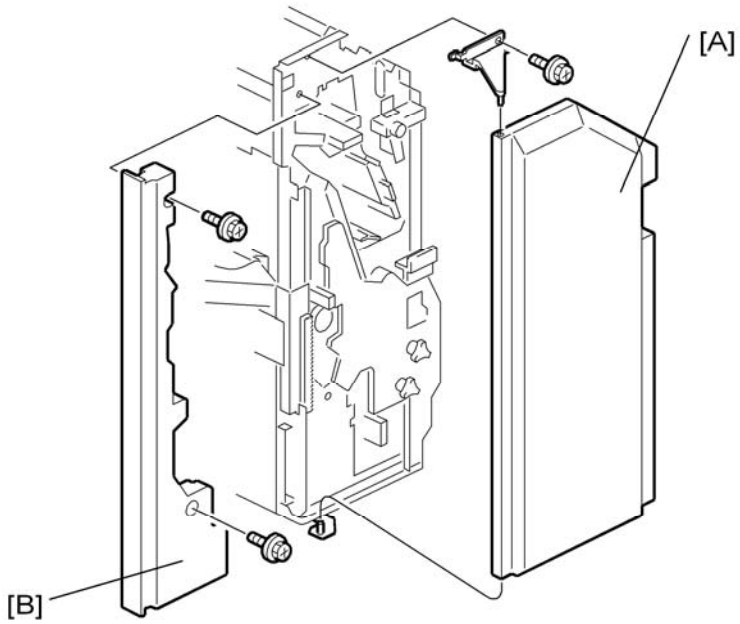


1. Remove the front cover [A] ( x 1).
2. Remove the inner cover [B] ( x 2).

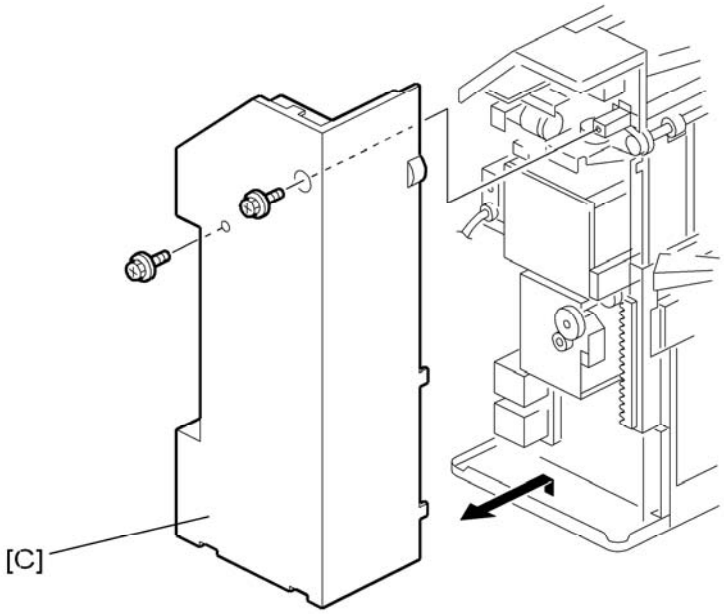


**3.** Remove the rear cover [C] ( x 2).

## 1.1.2 UPPER COVERS

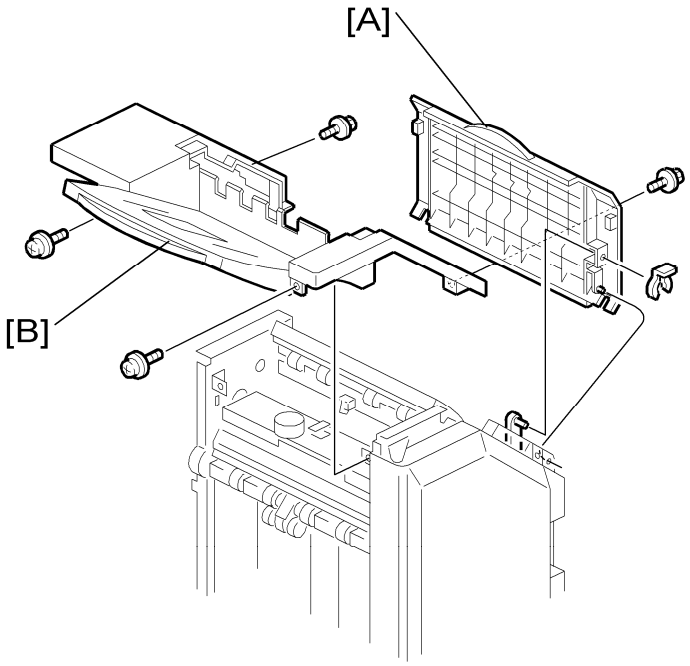


**1.** Remove the upper cover [A] ( x 1).

**2.** Remove the proof tray [B] ( x 4).

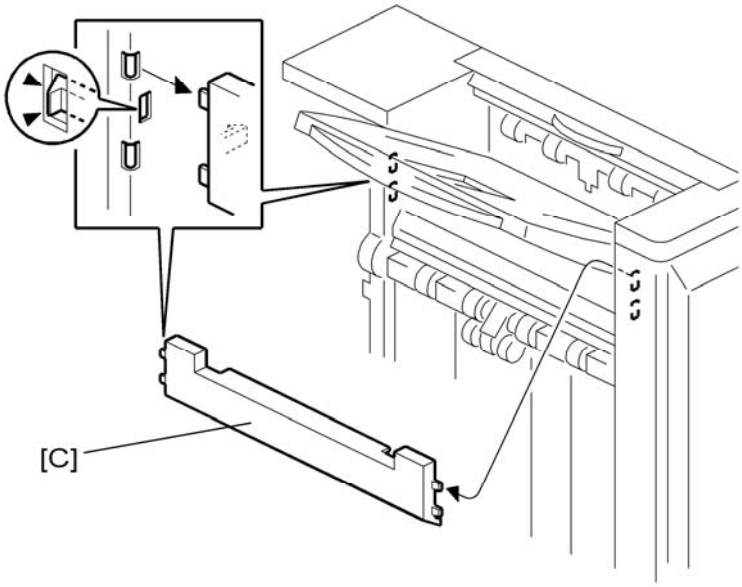


**3.** Remove the upper left cover [C].

# 1.2 MAIN BODY

## 1.2.1 POSITIONING ROLLER

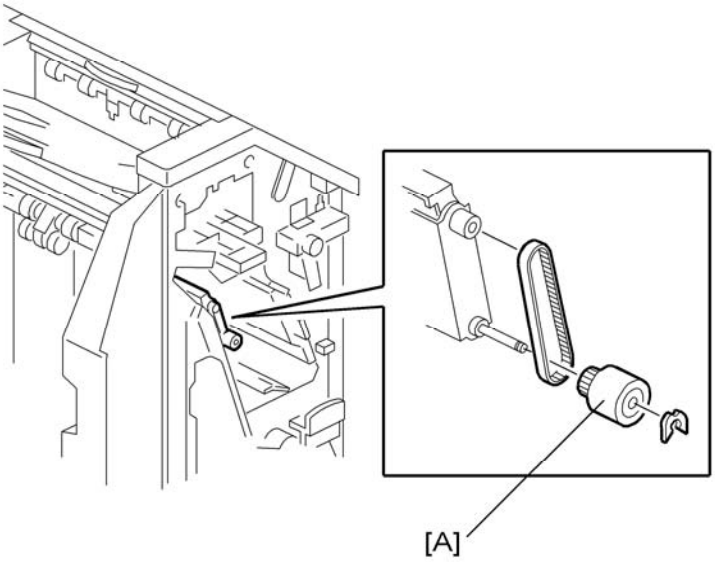


1. Open the front cover.
2. Remove the positioning roller [A] ( x 1).

## 1.2.2 SHIFT TRAY POSITION SENSOR, UPPER LIMIT SWITCH

1. Remove the following items.
   - Front Cover
   - Inner Cover
   - Rear Cover
   - Proof Tray
   - Upper Left Cover

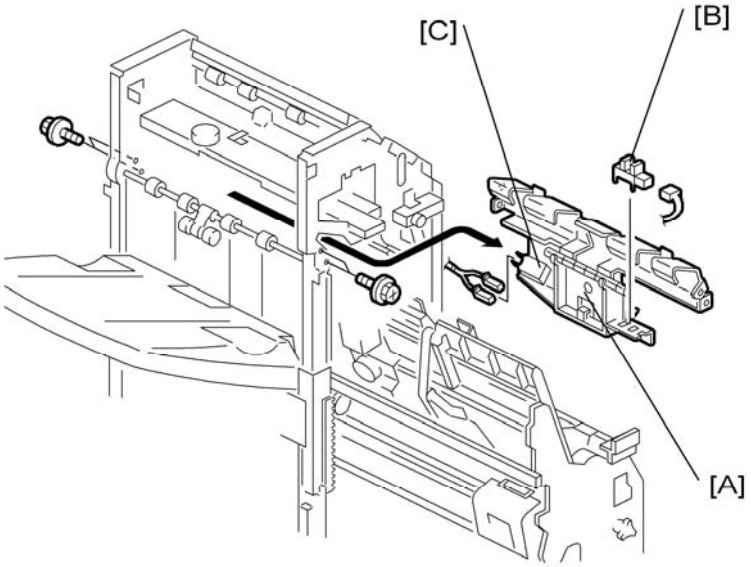


2. Remove the lower guide unit [A] ( x 4, x 2).
3. Remove the shift tray position sensor [B] ( x 1).
4. Remove the upper limit switch [C] ( x 2). (Pull it out from the assembly.)

## 1.2.3 PROOF TRAY EXIT / FULL SENSOR

1. Remove the front cover, rear cover and proof tray.
2. Open the upper cover.

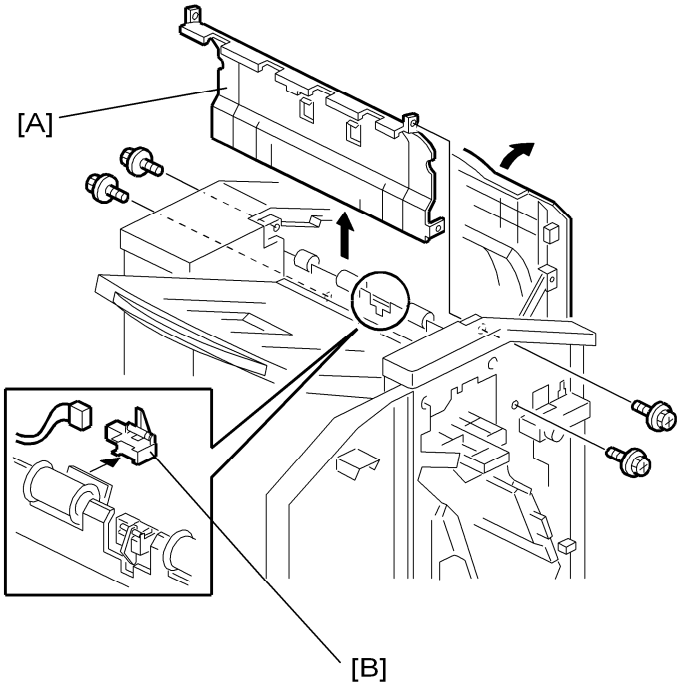

Main Body

3. Remove the vertical transport guide [A] ( x 4).
4. Remove the exit sensor [B] ( x 1).

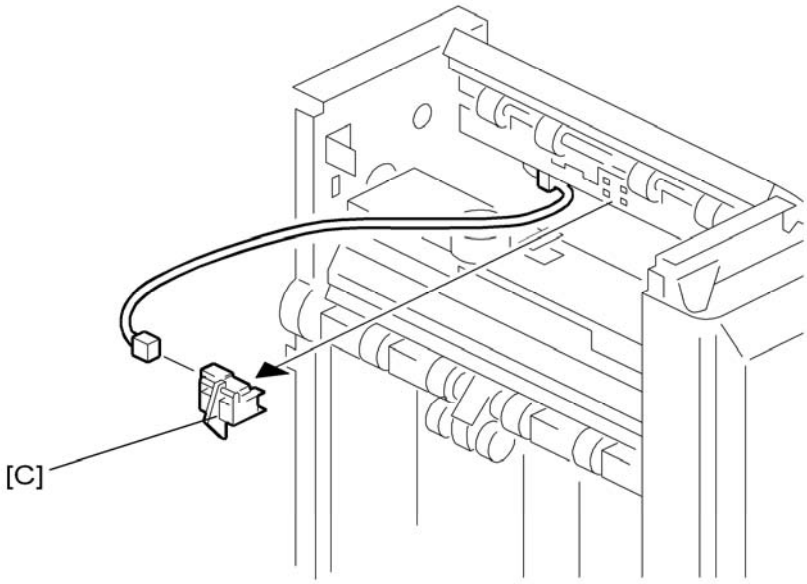


5. Remove the tray full sensor [C] ( x 1).

## 1.2.4 FINISHER ENTRANCE SENSOR

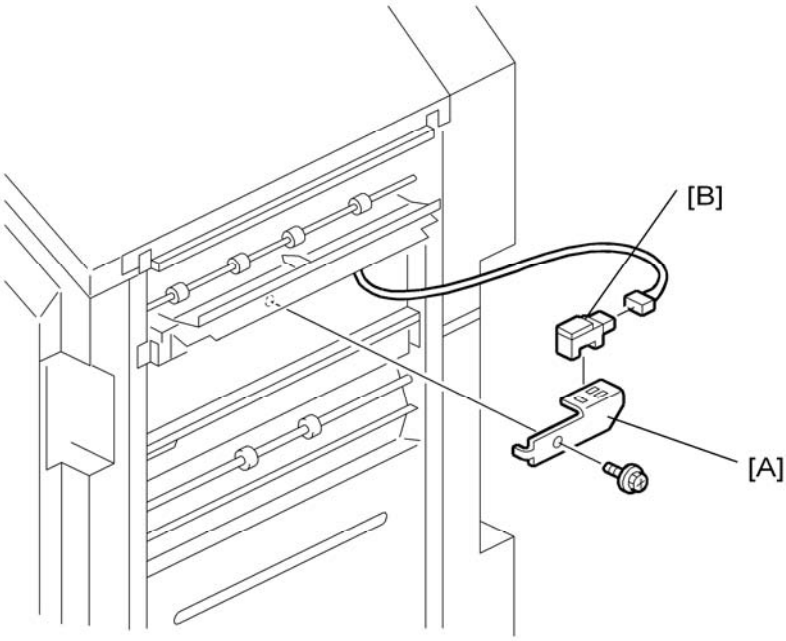


1. Remove the finisher entrance sensor with bracket [A] ( x 1).
2. Remove the finisher entrance sensor [B] ( x 1).

## 1.2.5 SHIFT TRAY EXIT SENSOR

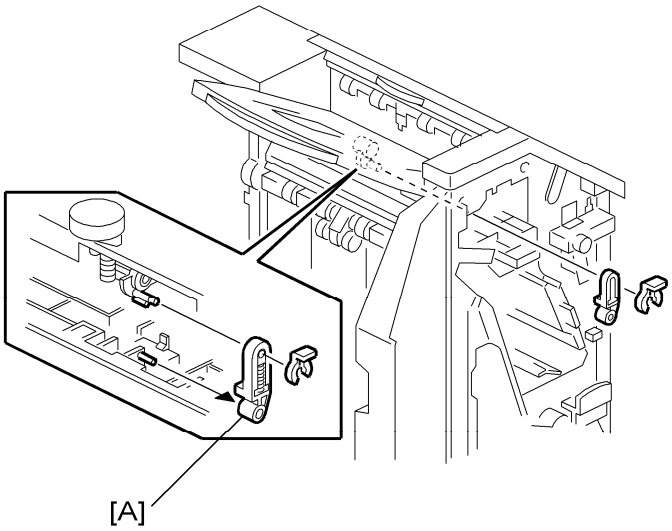


1. Remove the front cover and upper left cover.
2. Remove the link [A] ( x 1).

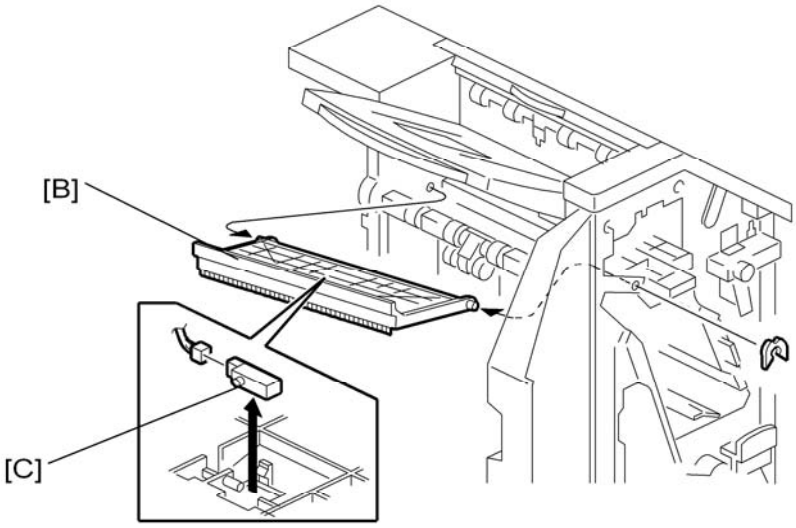


3. Remove the exit guide unit [B].
4. Remove the sensor [C] ( x 1).

## 1.2.6 STAPLE TRAY PAPER SENSOR

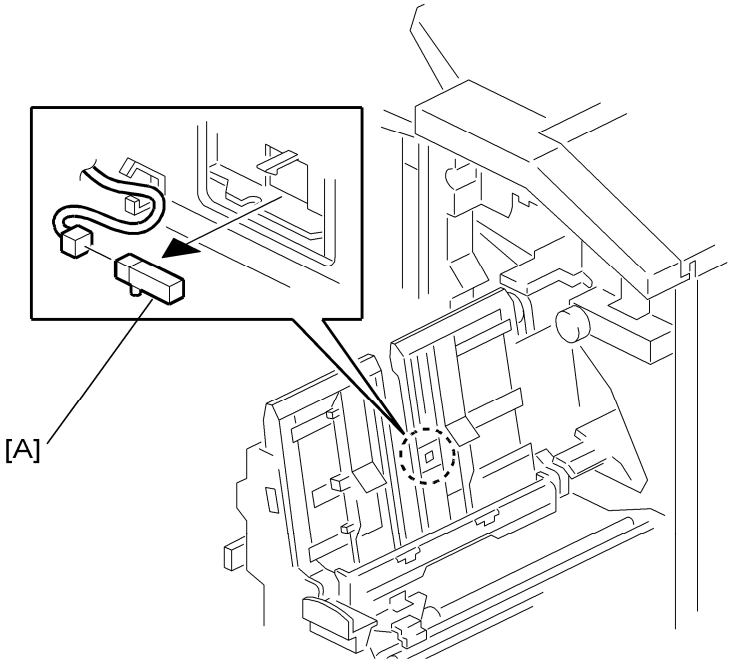


1. Open the front cover.
2. Pull out the staple/fold unit.
3. Remove the staple tray paper sensor [A] ( x 1).

## 1.2.7 SHIFT TRAY MOTOR

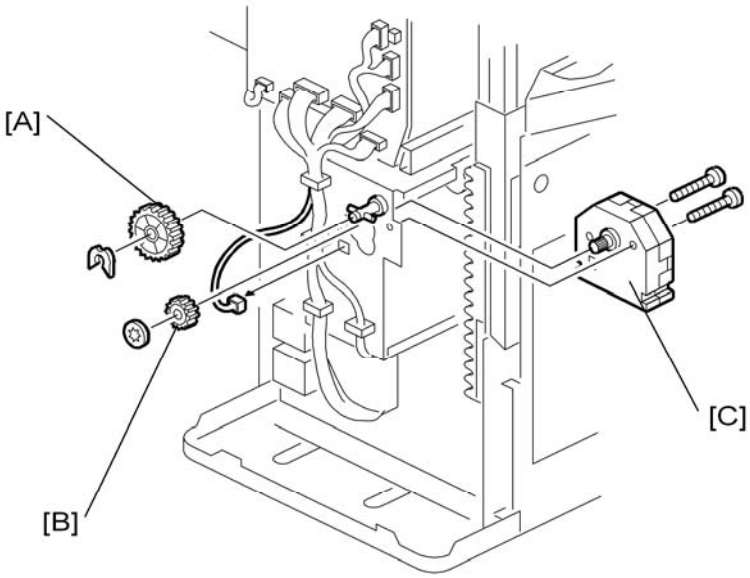


1. Remove the rear cover.
2. Open the front cover, and then pull out the staple/fold unit.

3. Remove the two gears [A], [B].
4. Remove the shift tray motor [C] ( x 2, x 1)

## 1.2.8 ENTRANCE MOTOR

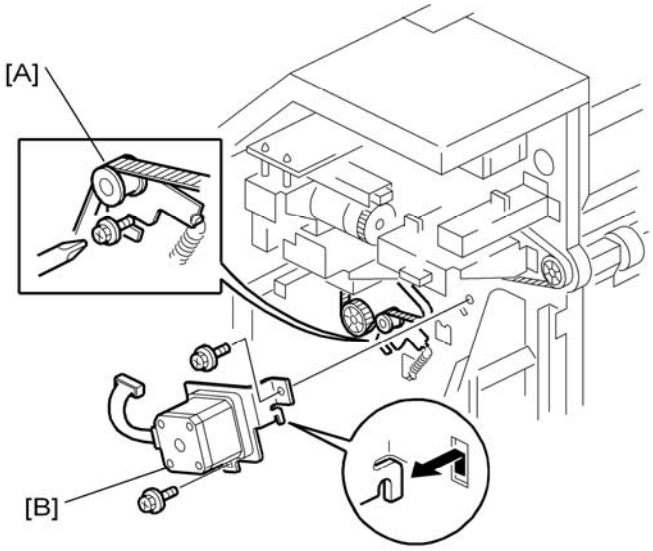


1. Remove the rear cover.
2. Release the belt tension [A].
3. Remove the entrance motor [B] ( x 2, x 1).

## 1.2.9 UPPER TRANSPORT MOTOR

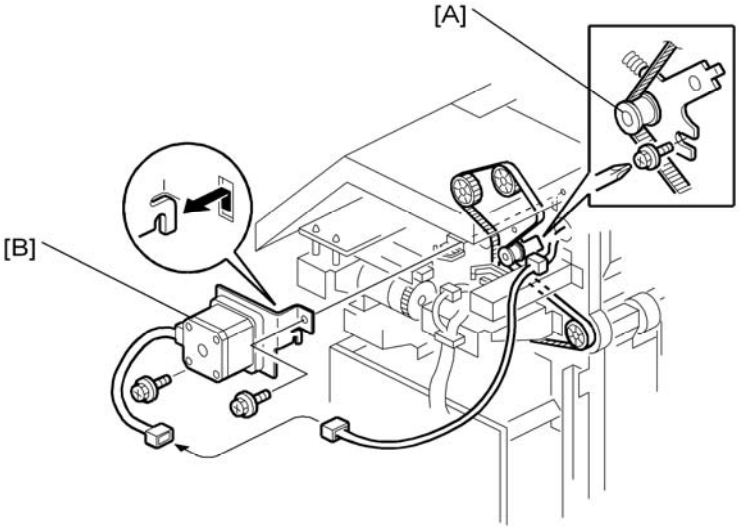


1. Remove the rear cover.

2. Release the belt tension [A].
3. Remove the upper transport motor [B] ( x 2, x 1).

## 1.2.10 LOWER TRANSPORT MOTOR

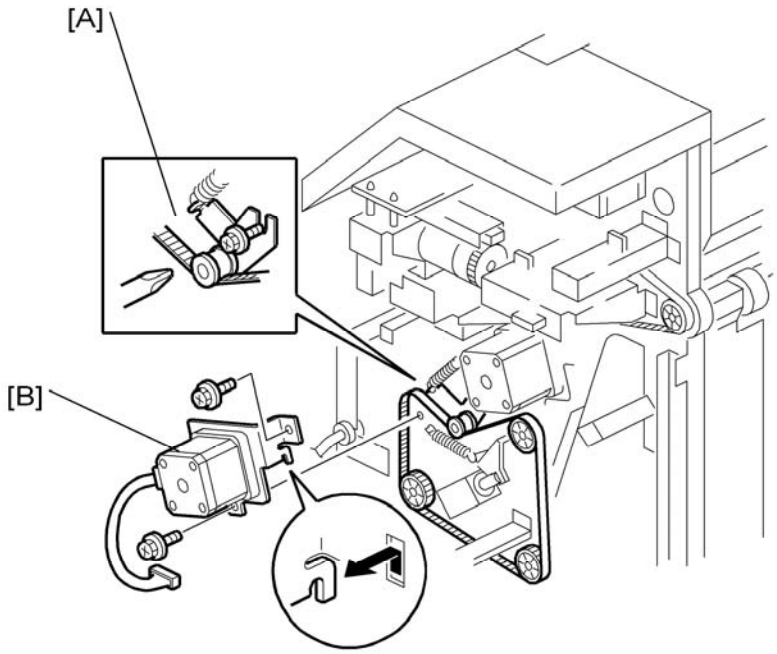


1. Remove the rear cover.
2. Release the belt tension [A].
3. Remove the lower transport motor [B] ( x 2, x 1).

## 1.2.11 SHIFT MOTOR

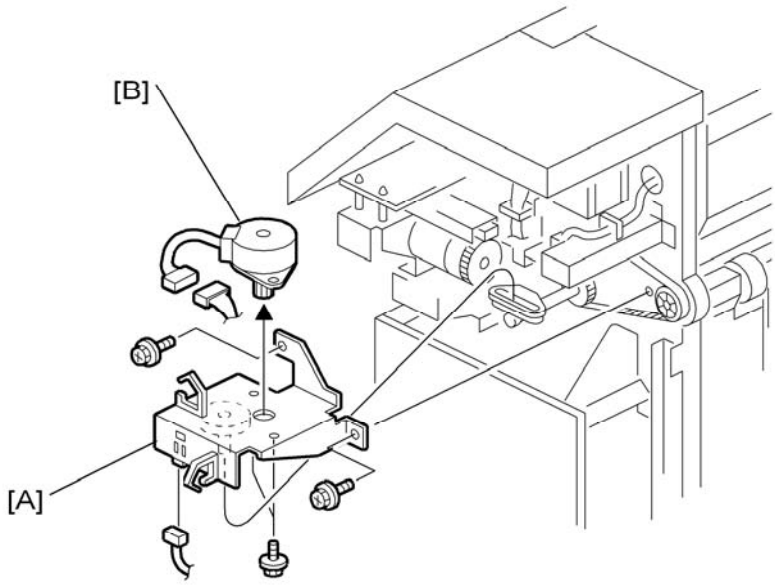


1. Remove the rear cover.
2. Remove the shift motor with bracket [A] ( x 1, x 4)
3. Remove the shift motor [B] ( x 1).

# 1.3 FOLDER

## 1.3.1 STAPLE FOLDER UNIT

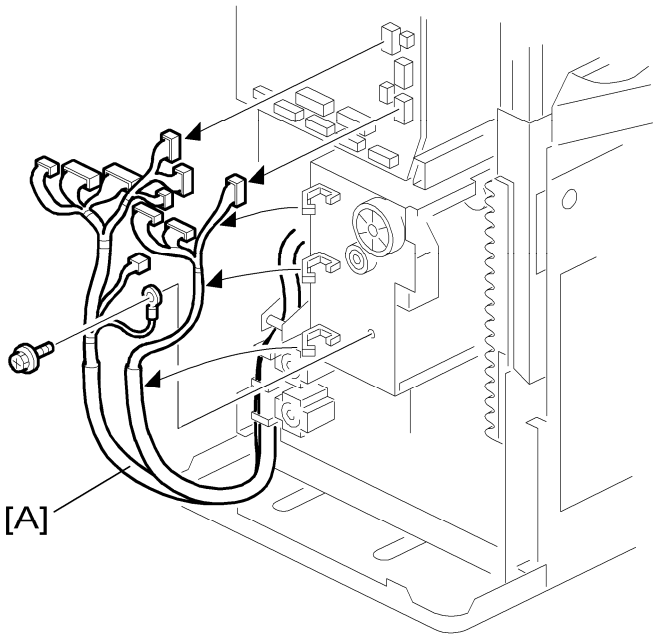


1. Remove the rear cover.
2. Disconnect all connectors and release the harness [A] for the staple folder unit ( x 1, x 3).
3. Open the front cover.

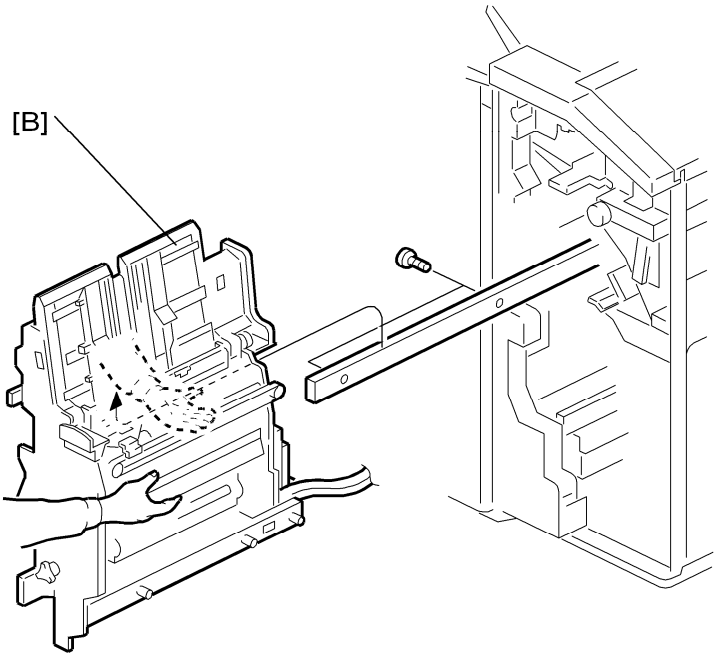

4. Pull out and remove the staple folder unit [B] ( x 2).

## 1.3.2 FOLDER UNIT

1. Remove the staple folder unit.

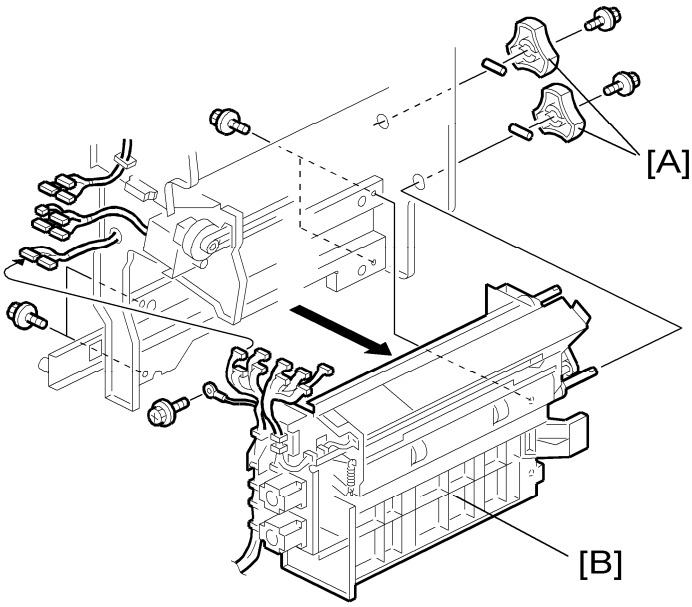


2. Remove the knobs [A] ( x 1 each).
3. Disconnect the connectors.
4. Remove the folder unit [B] ( x 4).

## 1.3.3 FOLDER UNIT EXIT SENSOR

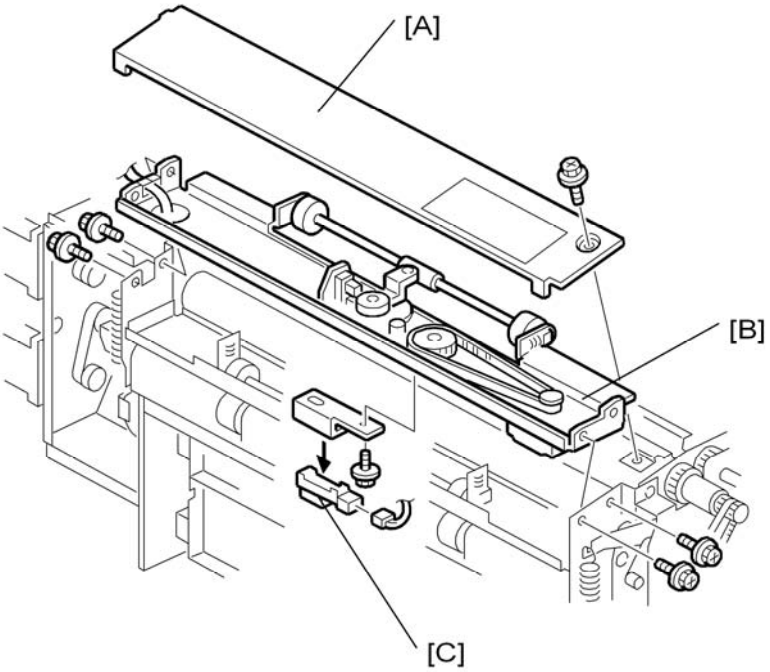


1. Remove the folder unit.
2. Remove the folder unit upper cover [A] ( x 1).
3. Remove the lower clamp roller unit [B] ( x 4).
4. Remove the folder unit exit sensor [C] ( x 1, x 1).

## 1.3.4 FOLDER UNIT ENTRANCE SENSOR

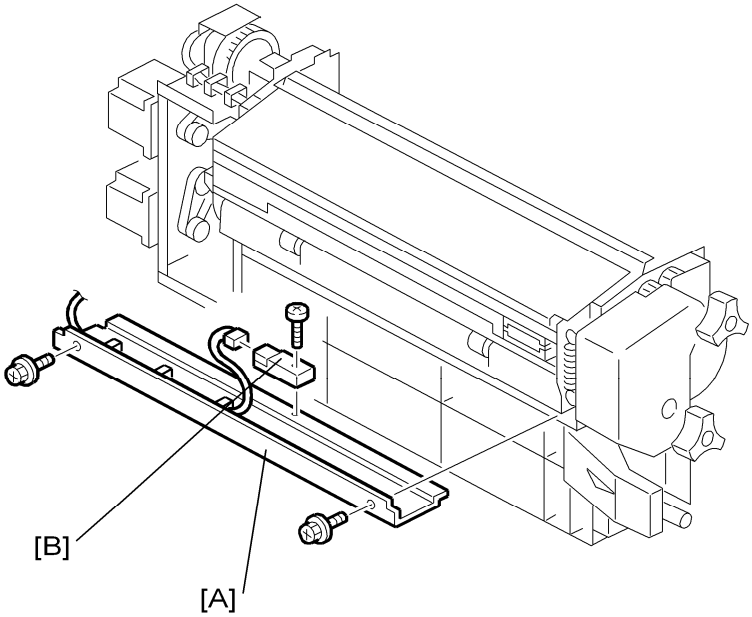


1. Open the front cover.
2. Pull out the staple folder unit.
3. Remove the exit cover [A] ( x 2).
4. Remove the entrance sensor [B] ( x 1, x 1).

## 1.3.5 STAPLER UNIT

1. Remove the rear cover.

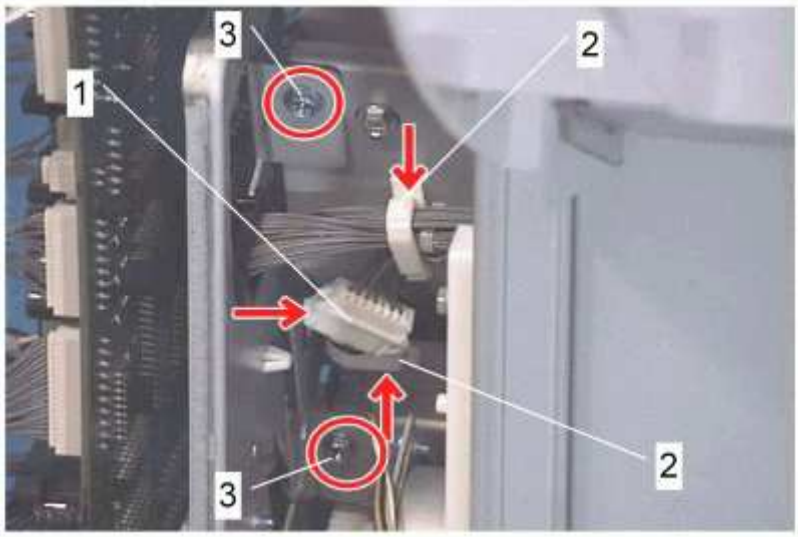


2. Disconnect the connector [1] and release the harness ( x 2 [2]).
3. Remove two screws [3].

Folder

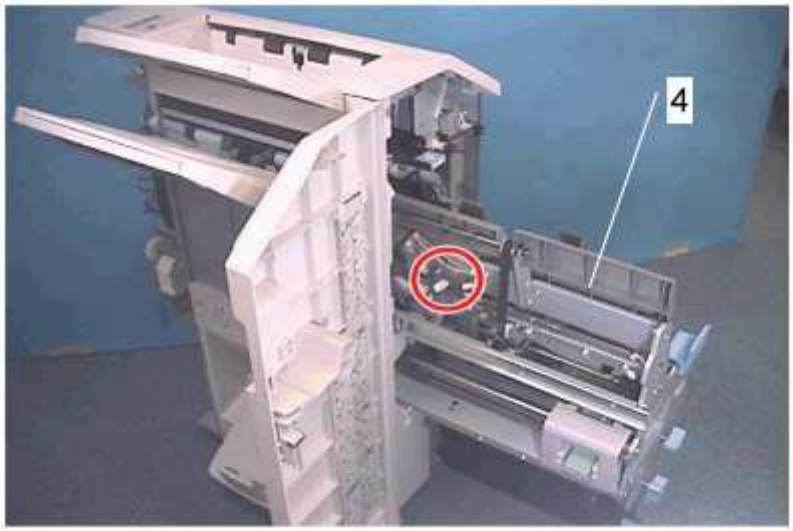


**4.** Open the front cover and pull out the staple folder unit [4].

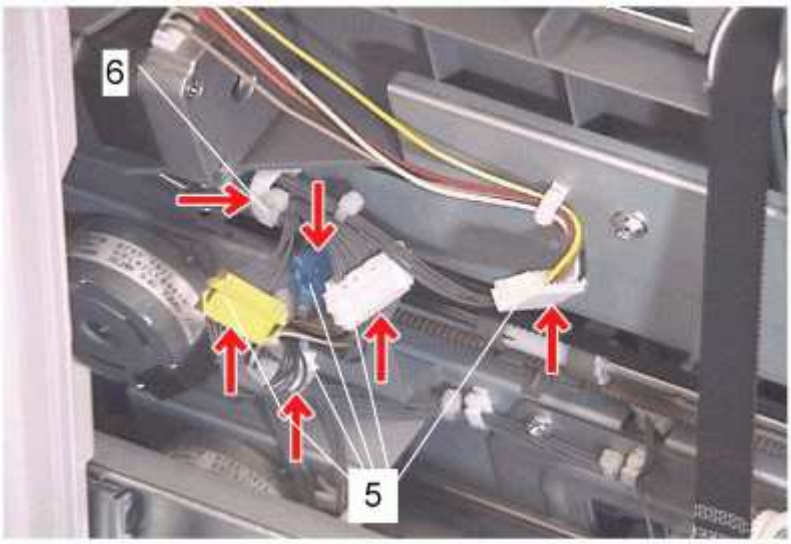


**5.** Disconnect the connectors and release the harness. (4 connectors [5], 1 clamp [6])

**6.** Remove a connector [7].

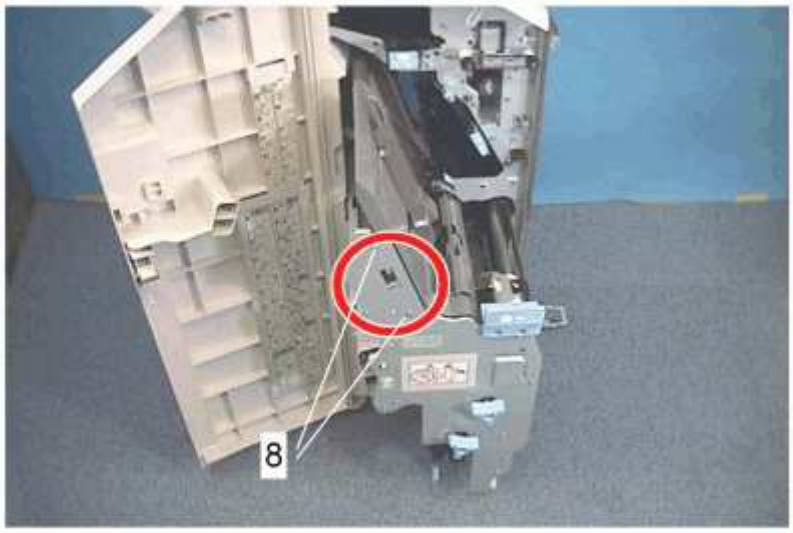


**7.** Remove 2 screws [8].

Folder

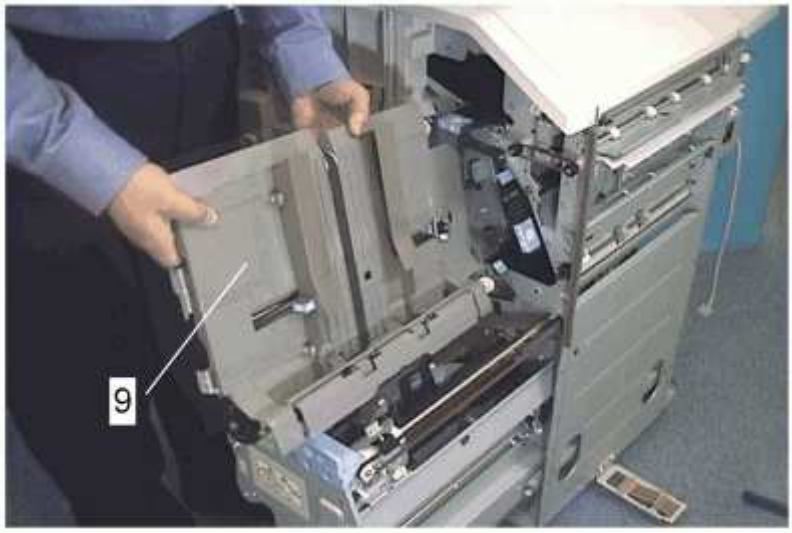


**8.** Remove the staple tray [9].

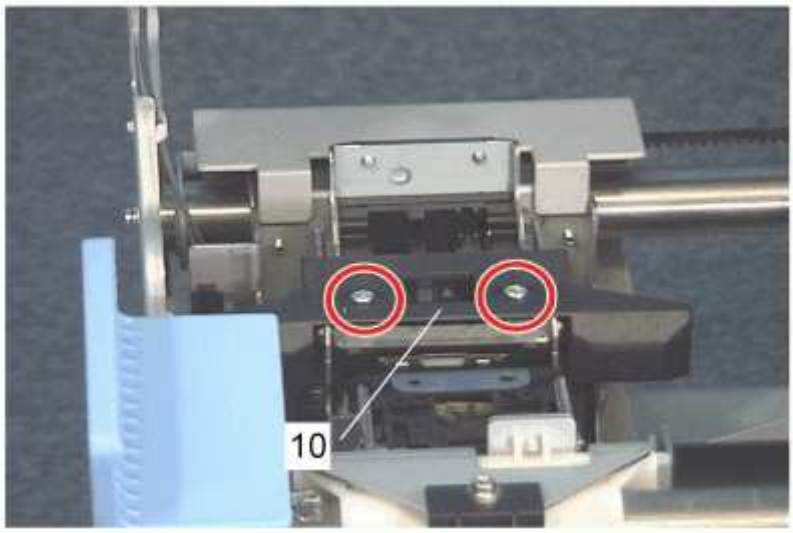


**9.** Remove the guide [10]. (2 screws)

**10.** Move the stapler unit until its screw come to the hole [11] on the stay.

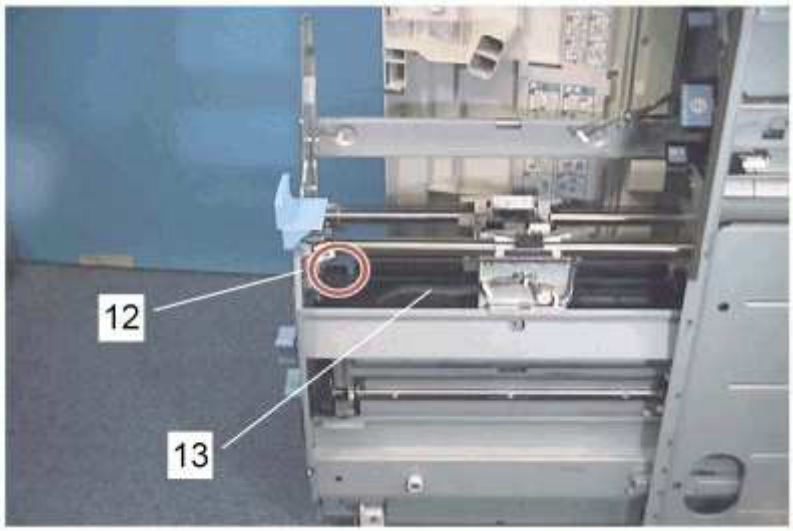


**11.** Remove the screw [12] that holds the front of the guide plate [13].

Folder

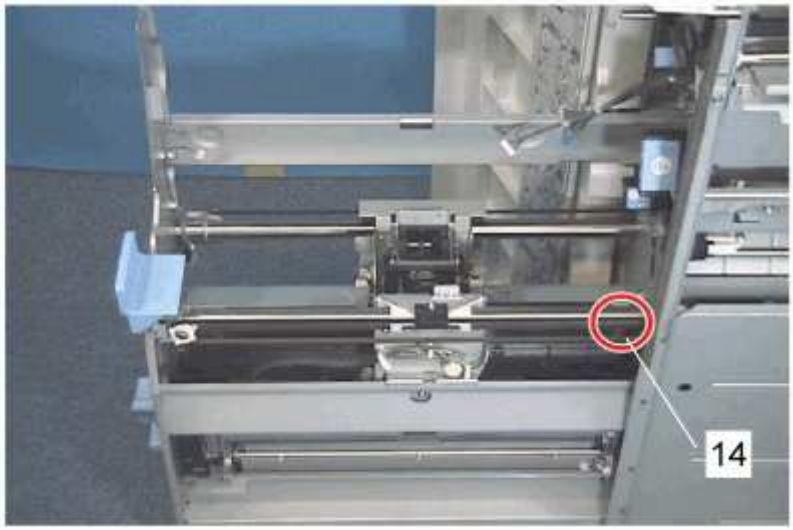


**12.** Remove the screw [14] that holds the rear of the guide plate.

Note

- Remove the rear side screw through the hole in the stay.

**13.** Remove the guide plate [13].

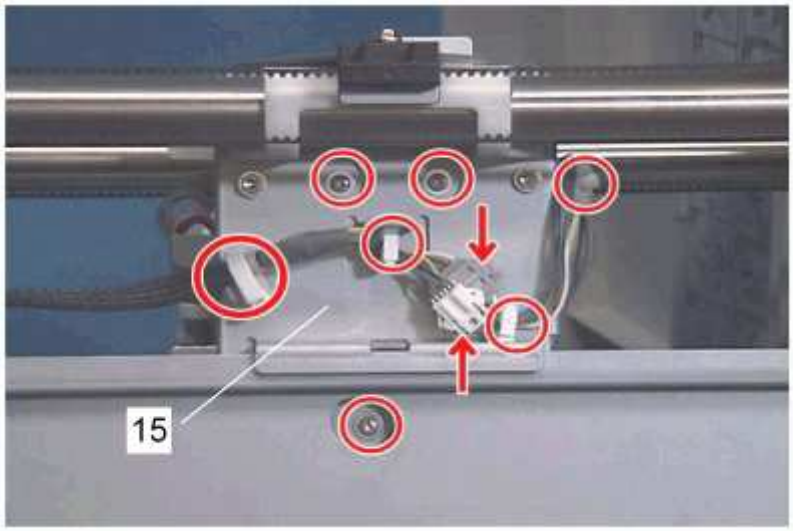


**14.** Remove the staple folding unit [15] (3 screws, 2 connectors).

Folder

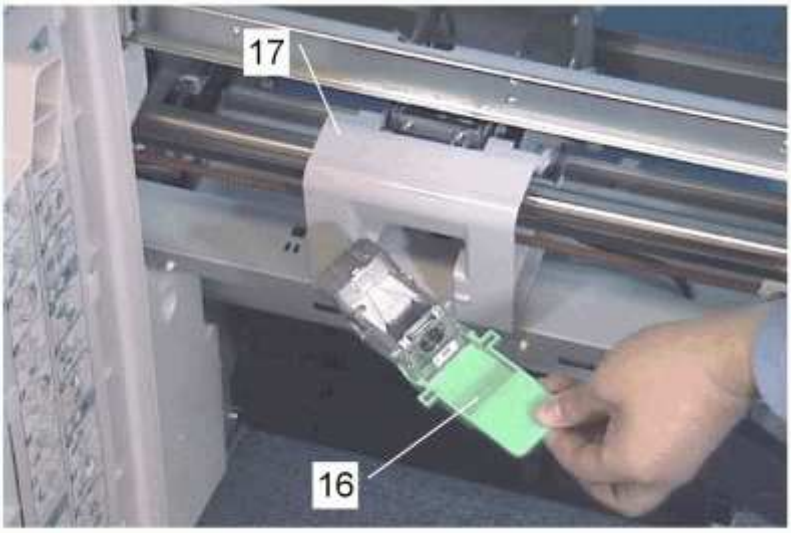


**15.** Remove the staple cartridge [16].

**16.** Remove the stapler unit cover [17].

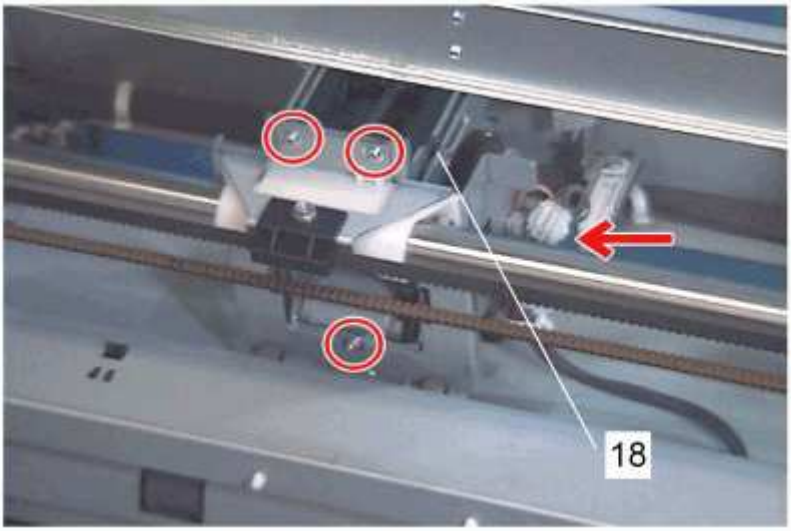


**17.** Remove the stapler drive unit [18].

**Reassembly**

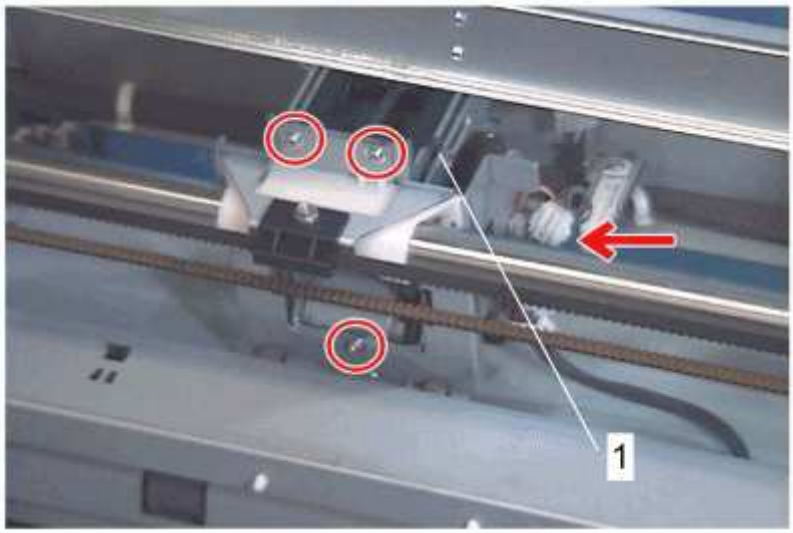


1. Mount the stapler drive unit [1].

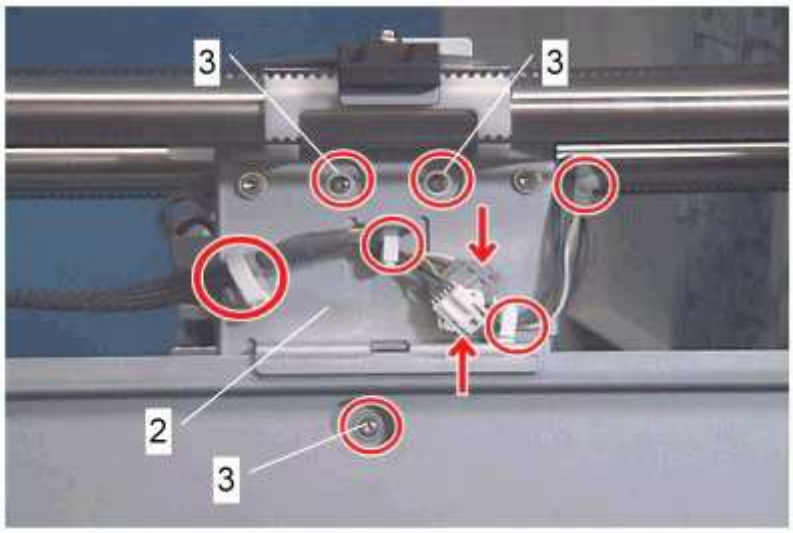


2. Mount the staple folder unit [2]. Do not tighten the screws [3] at this time.

Folder

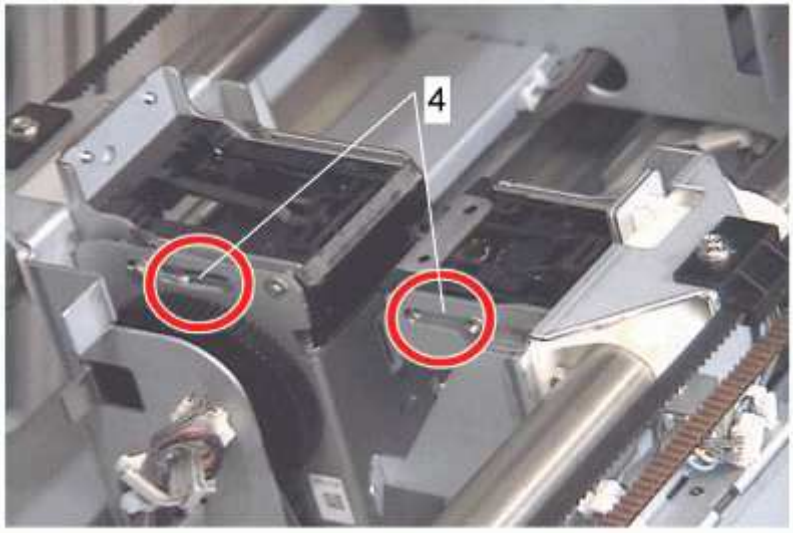


**3.** Set the special tool in the long hole [4] on both units.

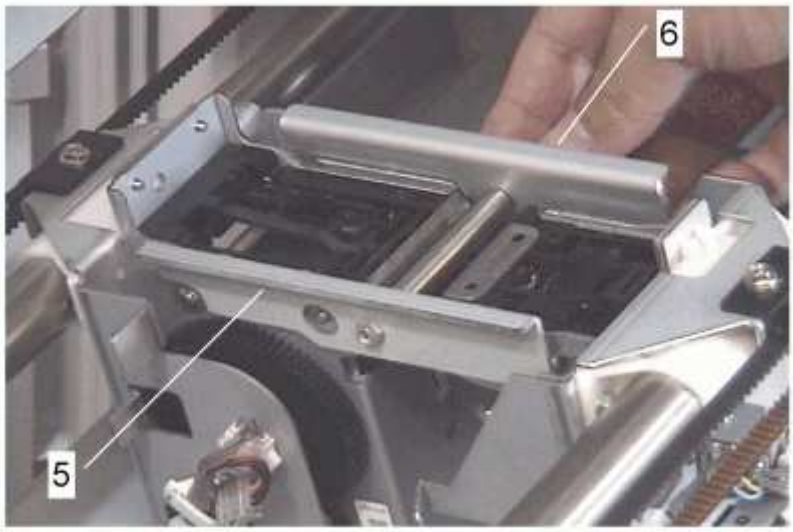


**4.** Secure the special tool [5] with the knob [6].

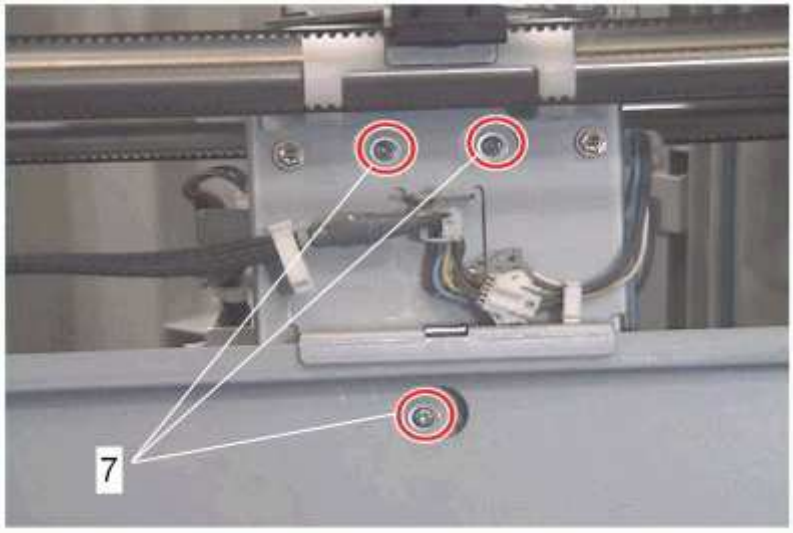


5. Tighten the screws [7] for the stapler folder unit.
6. Reassemble the machine.

# 1.4 OTHERS

## 1.4.1 MAIN BOARD

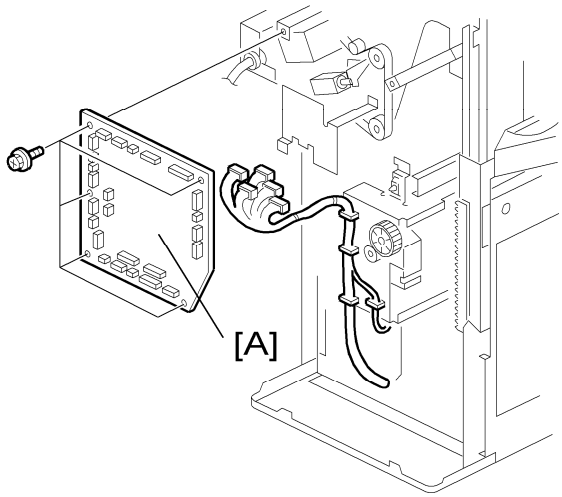


1. Remove the rear cover.
2. Remove the main board [A] ( x 5).

# 1.5 DIP SWITCHES

SW100: Adjust the staple position for booklet mode

| No. | Function |
|---|---|
| 1 | ON: 0.3 mm |
| 2 | ON: 0.6 mm |
| 3 | ON: 1.2 mm |
| 4 | Direction<br>OFF: Towards the trailing edge, ON: Towards the leading edge |

SW101: Adjust the fold position

| No. | Function |
|---|---|
| 1 | ON: 0.2 mm |
| 2 | ON: 0.4 mm |
| 3 | ON: 0.8 mm |
| 4 | Direction<br>OFF: Towards the trailing edge, ON: Towards the leading edge |

SW102: Move the tray position

| No. | Function |
|---|---|
| 1 | OFF → ON → OFF<br>Turn the switch from off to on, then turn it to off again. Then, the tray moves down to the shipping position |
| 2 | Not used |

Note

- After you change any of these dip switch settings, open and close the finisher cover to activate the new setting. It is not necessary to turn the main power off/on.

# 2. DETAILED SECTION DESCRIPTIONS

## 2.1 COMPONENT LAYOUT

### 2.1.1 MECHANICAL COMPONENT LAYOUT

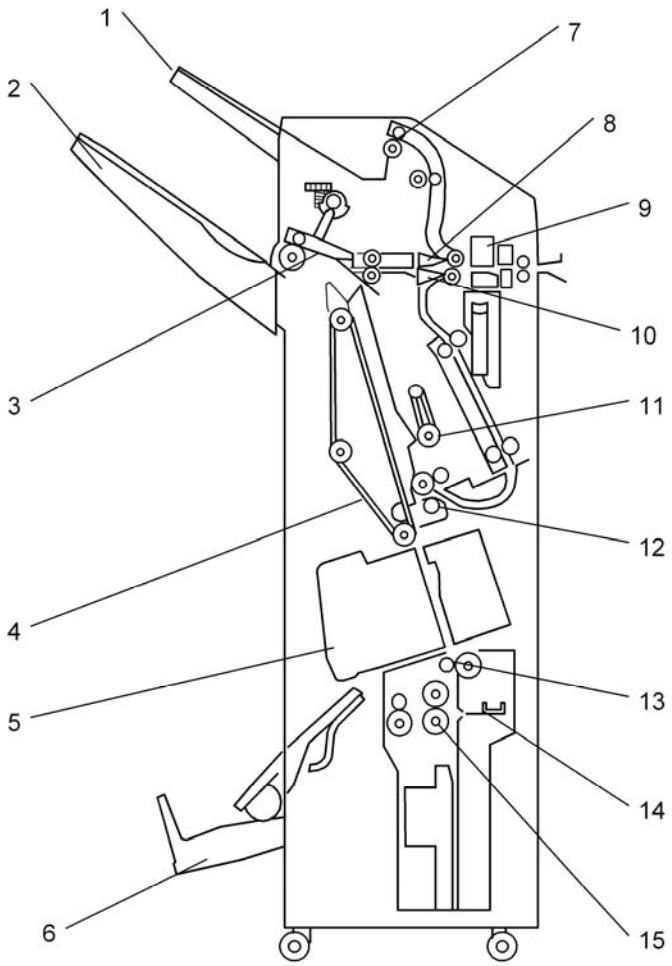


| | | |
|---|---|---|
| 1. Proof Tray | 2. Shift Tray | 3. Exit Guide Plate |
| 4. Stack Feed Out Belt | 5. Staple Unit | 6. Booklet Tray |
| 7. Proof Tray Exit Roller | 8. Proof Tray Junction Gate | 9. Punch Unit |
| 10. Staple Tray Junction Gate | 11. Positioning Roller | 12. 1st Clamp Roller |
| 13. 2nd Clamp Roller | 14. Folder Plate | 15. Folder Roller |

Drive Layout

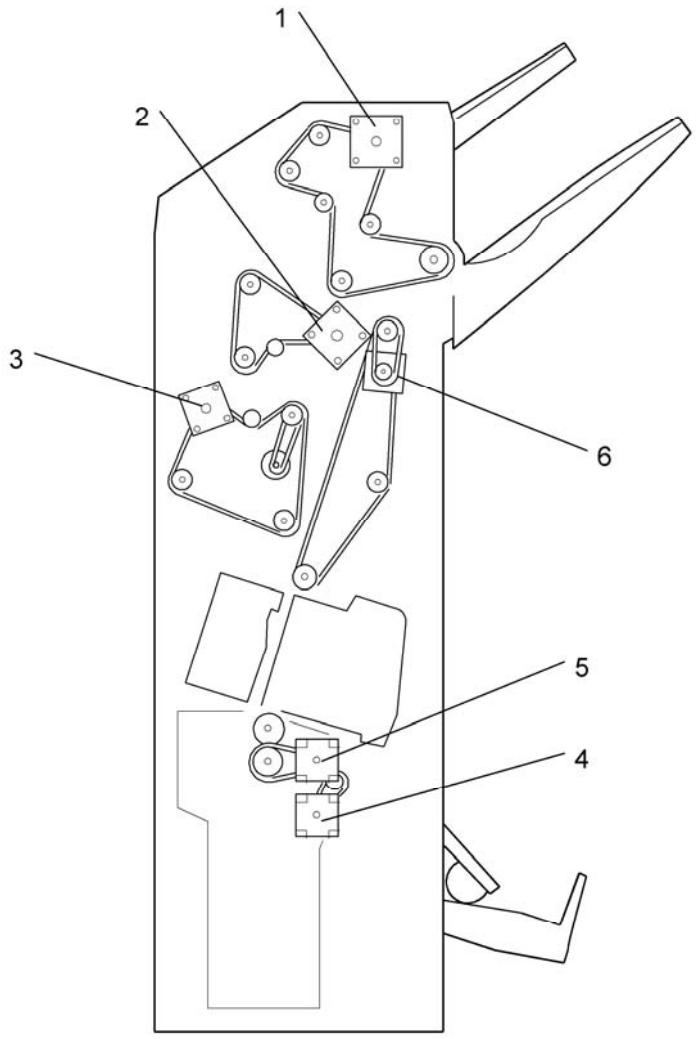


1. Upper Transport Motor
2. Entrance Motor
3. Lower Transport Motor
4. Fold Plate Motor
5. Fold Roller Motor
6. Stack Feed-out Motor

## 2.1.2 ELECTRICAL COMPONENT LAYOUT

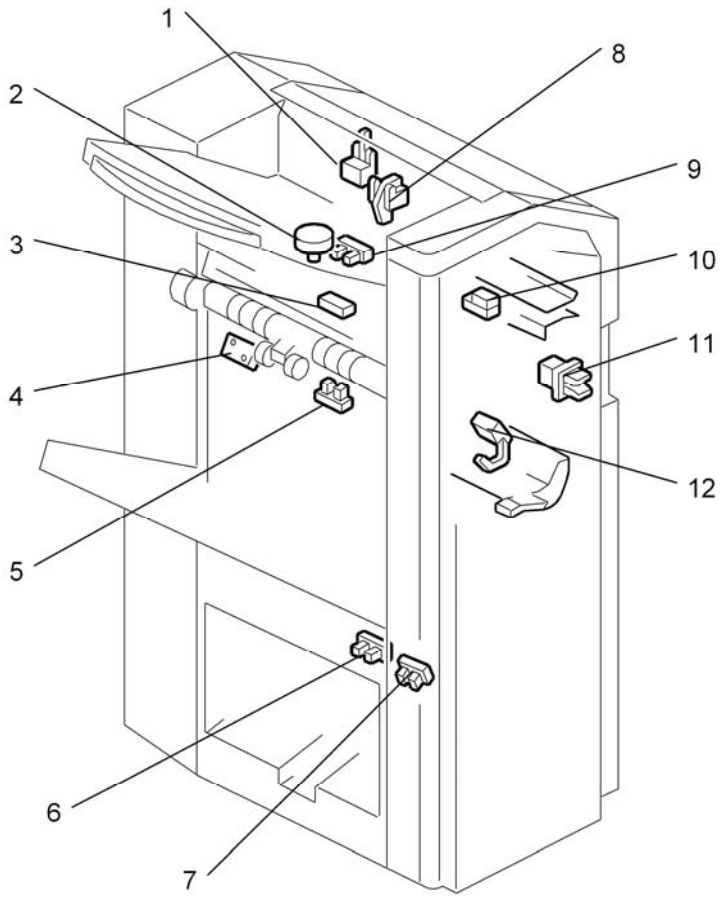


1. Proof Tray Exit Sensor
2. Exit Guide Plate Motor
3. Shift Tray Exit Sensor
4. Upper Limit Switch
5. Shift Tray Position Sensor
6. Rear Booklet Tray Full Sensor
7. Front Booklet Tray Full Sensor
8. Proof Tray Full Sensor
9. Exit Guide Plate HP Sensor
10. Entrance Sensor
11. Front Door Safety Switch
12. Staple Tray Exit Sensor

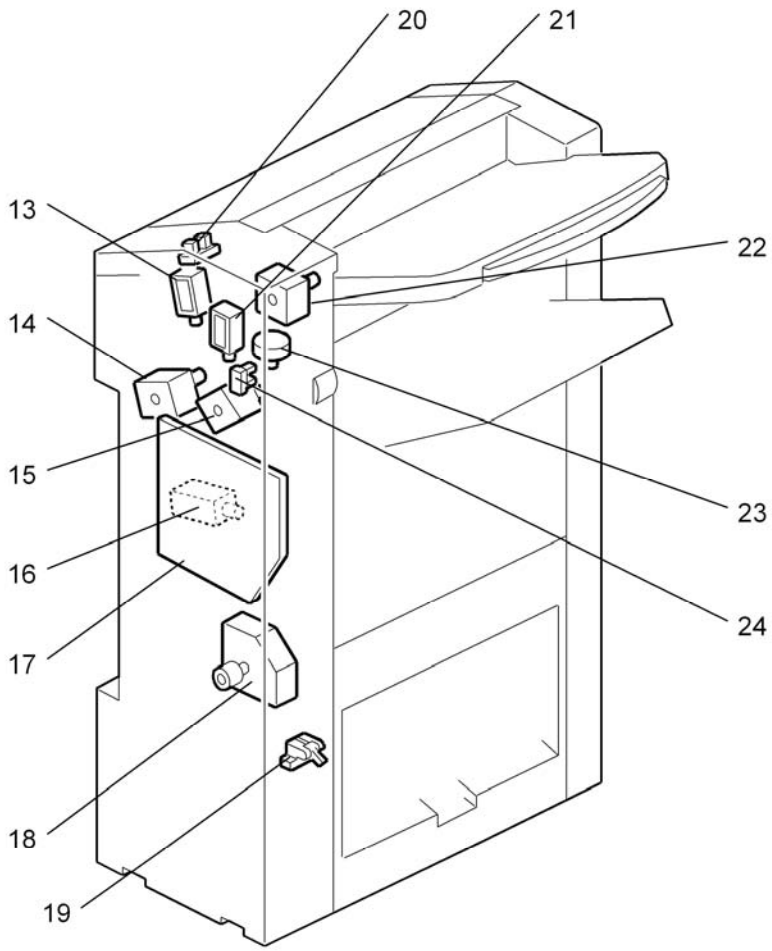


13. Proof Tray Gate Solenoid
14. Lower Transport Motor
15. Entrance Motor
16. Positioning Roller Solenoid
17. Main Board
18. Shift Tray Motor
19. Lower Limit Sensor
20. Upper Cover Sensor
21. Staple Tray Gate Solenoid
22. Upper Transport Motor
23. Shift Motor
24. Shift Motor HP Sensor

Component Layout

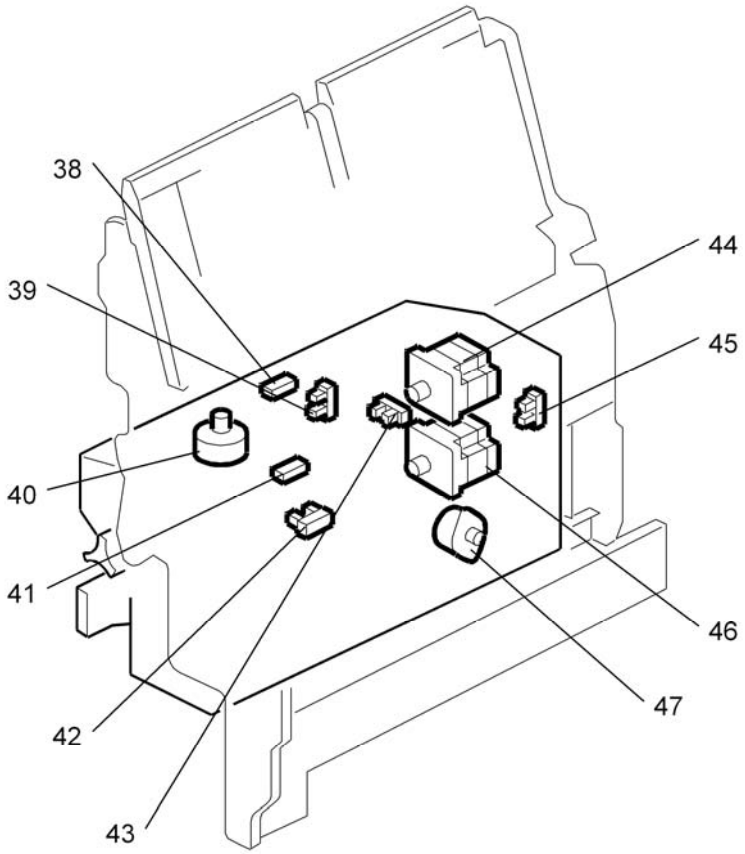


38. Fold Unit Exit Sensor
39. Lower Clamp Roller HP Sensor
40. Lower Retraction Motor
41. Fold Unit Entrance Sensor
42. Bottom Fence HP Sensor
43. Fold Cam HP Sensor
44. Fold Roller Motor
45. Fold Plate HP Sensor
46. Fold Plate Motor
47. Bottom Fence Lift Motor

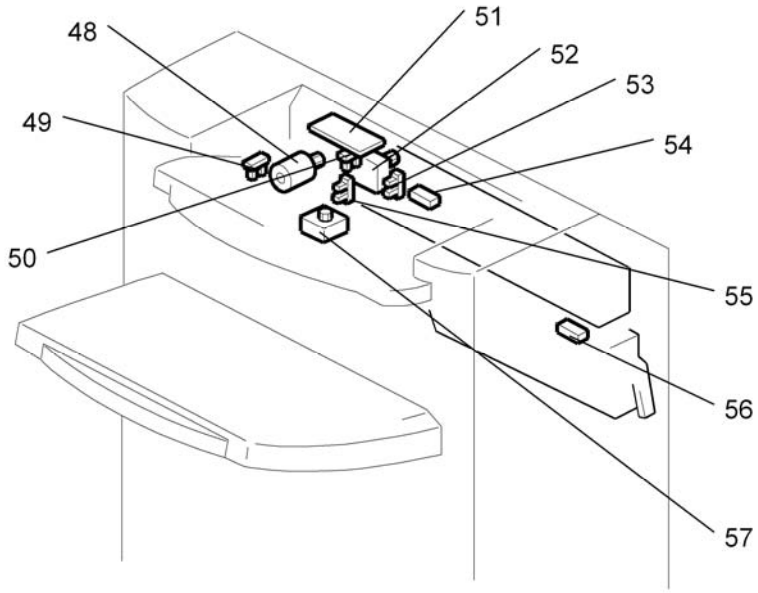


48. Punch Motor
49. Punch Encoder Sensor
50. Punch HP Sensor
51. Punch Board
52. Paper Position Sensor Slide Motor
53. Paper Position Slide HP Sensor
54. Paper Position Sensor
55. Punch Movement HP Sensor
56. Punch Hopper Full Sensor
57. Punch Movement Motor

Component Layout

Electrical Component Descriptions

### *Boards*

| Item | No. | Purpose |
|---|---|---|
| Main Board | 17 | Controls the finisher. |
| Punch Board | 51 | Controls the punch unit. |

### *Sensors*

| Item | No. | Purpose |
|---|---|---|
| Proof Tray Exit Sensor | 1 | Detects paper when it is fed out to the proof tray. |
| Shift Tray Exit Sensor | 3 | Detects paper when it is fed out to the shift tray. |
| Shift Tray Position Sensor | 5 | Detects when the shift tray is at the correct height to receive paper. |
| Rear Booklet Tray Full Sensor | 6 | One of two sensors that the machine uses to determine when the booklet tray is full. |
| Front Booklet Tray Full Sensor | 7 | One of two sensors that the machine uses to determine when the booklet tray is full. |
| Proof Tray Full Sensor | 8 | Detects when the proof tray is full. |
| Exit Guide Plate HP Sensor | 9 | Detects when the exit guide plate is at home position |
| Entrance Sensor | 10 | Detects when paper comes into the finisher |
| Staple Tray Exit Sensor | 12 | Detects paper leaving the bottom of the stapler |
| Lower Limit Sensor | 19 | Detects when the shift tray has moved to its lowest possible position (the shift tray is full). |
| Upper Cover Sensor | 20 | Detects when the upper cover is open |
| Shift Motor HP Sensor | 24 | Detects when the side-to-side motion of the shift roller is at home position |

| Item | No. | Purpose |
|---|---|---|
| Stopper S HP Sensor | 28 | Detects when the ‘stopper S’ mechanism is at home position. |
| Stack Feed Out HP Sensor | 29 | Detects when the stack feed-out belt is at home position |
| Staple Unit HP Sensor | 30 | Detects when the side-to-side motion of the stapler unit is at home position |
| Jogger HP Sensor | 34 | Detects when the jogger unit is at home position |
| Staple Tray Paper Sensor | 35 | Detects when paper is fed into the stapler tray |
| Stapler Safety Sensor | 37 | Stops side-to-side movement of the stapler until stopper S and the stack feed-out pawl mechanisms are at home position, to prevent damage to the machine. |
| Fold Unit Exit Sensor | 38 | 1) Detects the folded edge of the stack as it feeds out from the nip of the fold rollers so the fold feeds back into the nip, 2) when the folded booklet finally emerges from the nip of the fold rollers, detects the leading and trailing edge of the booklet to make sure that it feeds out correctly. |
| Lower Clamp Roller HP Sensor | 39 | Detects when the lower clamp roller is at home position |
| Fold Unit Entrance Sensor | 41 | Detects 1) the leading edge of the stack during booklet stapling, and 2) also used to signal an alarm if a paper is detected at the entrance of the fold unit when the copier is turned on. |
| Bottom Fence HP Sensor | 42 | Detects when the bottom fence of the booklet folding mechanism is at home position |
| Fold Cam HP Sensor | 43 | Along with the fold plate HP sensor, this sensor controls the movement of the fold plate. The actuator mounted on the end of the roller that drives the folder plate forward and back makes three full rotations, i.e. the actuator passes the sensor gap twice and stops on the 3rd rotation and reverses. This accounts for the left and right movement of the fold plate. |
| Fold Plate HP Sensor | 45 | Along with the fold plate HP sensor this sensor controls the movement of the fold plate. The fold plate has arrived at the home position when the edge of the plate enters the gap of this sensor. |
| Punch Encoder Sensor | 49 | Controls the timing for activating the punches, to punch holes in the paper at the correct position. |

Component Layout

| Item | No. | Purpose |
|---|---|---|
| Punch HP Sensor | 50 | Detects when the hole-punch firing mechanism is at home position |
| Paper Position Slide HP Sensor | 53 | Detects when the mechanism that measures the paper position in the punch unit is at home position |
| Paper Position Sensor | 54 | Detects the side edge of the paper, to tell the machine where to put the punch holes. |
| Punch Movement HP Sensor | 55 | Detects when the side-to-side motion of the punch unit is at home position. |
| Punch Hopper Full Sensor | 56 | Detects when the punch hopper is full. Also checks if the hopper is installed correctly. |

### *Motors*

| Item | No. | Purpose |
|---|---|---|
| Exit Guide Plate Motor | 2 | Controls the exit guide plate mechanism. |
| Lower Transport Motor | 14 | Controls the positioning roller, and other rollers in the finisher (see 'Drive Layout' for details). |
| Entrance Motor | 15 | Controls the rollers at the entrance of the finisher. |
| Shift Tray Motor | 18 | Moves the shift tray up and down. |
| Upper Transport Motor | 22 | Controls the rollers that feed paper from the junction gate to the proof tray and to the shift tray (see 'Drive Layout' for details). |
| Shift Motor | 23 | Moves the shift tray from side to side. |
| Stack Feed Out Motor | 25 | Controls the stack feed-out belt |
| Jogger Motor | 26 | Controls the jogger in the stapler tray |
| Upper Retraction Motor | 27 | Controls the 'stopper S' mechanism. Also moves the upper clamp roller into contact and away from the stack of paper in the stapler tray. |
| Upper | 33 | Rotates the upper clamp roller. |

| Item | No. | Purpose |
|---|---|---|
| Clamp Roller Motor | | |
| Stapler Unit Motor | 36 | Moves the stapler from side to side. |
| Lower Retraction Motor | 40 | Drives a large cam that alternately clamps and unclamps the lower clamp roller, which is the idle roller of the clamp roller pair.<br>When these rollers are clamped, they are part of the paper feed path and feed the stack toward the bottom fence of the fold unit. When the idle roller is retracted, the stacks falls a very short distance (3 mm) onto the fold unit bottom fence below. These rollers remain unclamped while the bottom fence positions the stack for folding and while the stack is folded by the fold rollers. |
| Fold Roller Motor | 44 | Controls the rollers that fold the paper. |
| Fold Plate Motor | 46 | Controls the plate that makes the fold in the paper. |
| Bottom Fence Lift Motor | 47 | Raises the bottom fence and stapled stack to the correct fold position for the paper size. |
| Punch Motor | 48 | Punches the holes in the paper. |
| Paper Position Sensor Slide Motor | 52 | Controls side-to-side movement of the paper position sensor in the punch unit. |
| Punch Movement Motor | 57 | Moves the punch from side to side. |

### *Solenoids*

| Item | No. | Purpose |
|---|---|---|
| Proof Tray Gate Solenoid | 13 | Controls the proof tray junction gate |
| Positioning Roller Solenoid | 16 | Controls the positioning roller. |
| Staple Tray Gate Solenoid | 21 | Controls the staple tray junction gate |

### *Switches*

| Item | No. | Purpose |
|---|---|---|
| Upper Limit Switch | 4 | Detects when the shift tray is at the highest possible position, and cuts power to the shift tray motor. |

Component Layout

| Item | No. | Purpose |
|---|---|---|
| Front Door Safety Switch | 11 | Cuts dc power when the front door is opened. |

### *Others*

| Item | No. | Purpose |
|---|---|---|
| Staple Driver Unit | 31 | Pushes the staples into the paper. |
| Staple Folder Unit | 32 | Folds the ends of the staples after stapling |

## 2.2 JUNCTION GATES

Two junction gates control the path of paper.

Each junction gate is controlled by a solenoid.

Junction gate operation is summarized in the following table.

| Mode | Proof | Shift | Staple |
|---|---|---|---|
| Paper Path | | | 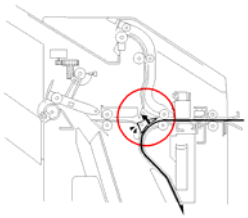 |
| Proof Tray Gate Solenoid | ON | OFF | OFF |
| Staple Tray Gate Solenoid | OFF | OFF | ON |

## 2.3 PROOF TRAY

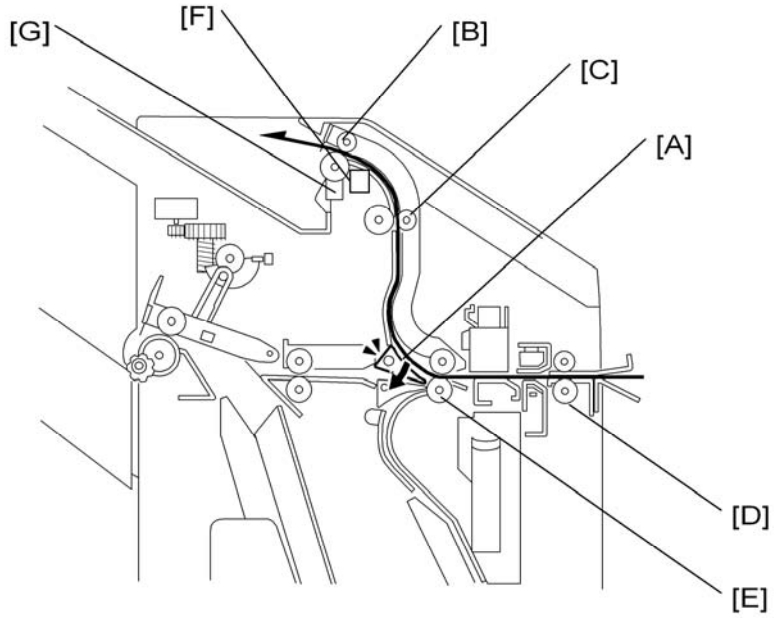


Proof Tray Junction Gate Control [A]: Proof Tray Gate Solenoid

Roller Drive:

- Proof Tray Exit Roller [B], Proof Tray Transport Roller [C]: Controlled by the Upper Transport Motor
- Entrance Roller [D], Transport Roller [E]: Controlled by the Entrance Motor

Jam Detection: Proof Tray Exit Sensor [F]

Tray Full Detection: Proof Tray Full Sensor [G]

# 2.4 SHIFT TRAY

## 2.4.1 UP/DOWN MOTION

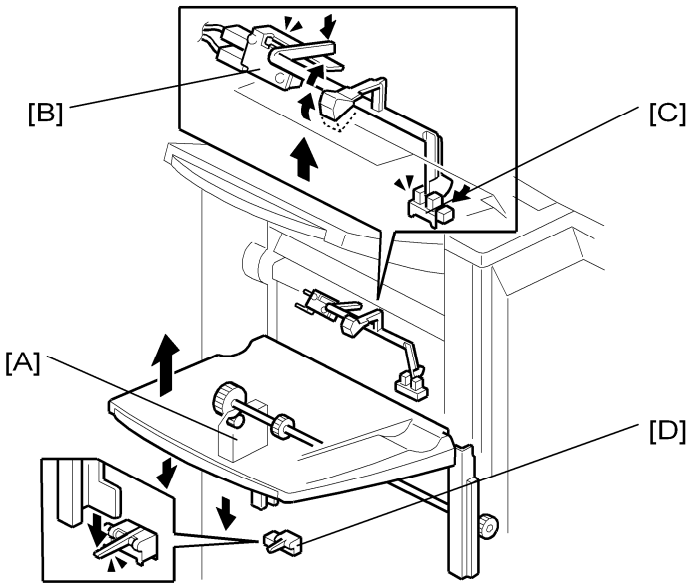


The shift tray motor [A] moves the tray up and down.

The upper limit switch [B] detects when the tray moves up too far, and cuts power to the shift tray motor.

The shift tray position sensor [C] checks when the tray (or the top of the stack) is at the correct height to receive paper.

- Shift Mode: This is checked every 5 sheets
- Staple Mode: This is checked every stack

The lower limit sensor [D] detects when the tray is full. At this point, the tray cannot move down any more.

## 2.4.2 SIDE-TO-SIDE MOTION

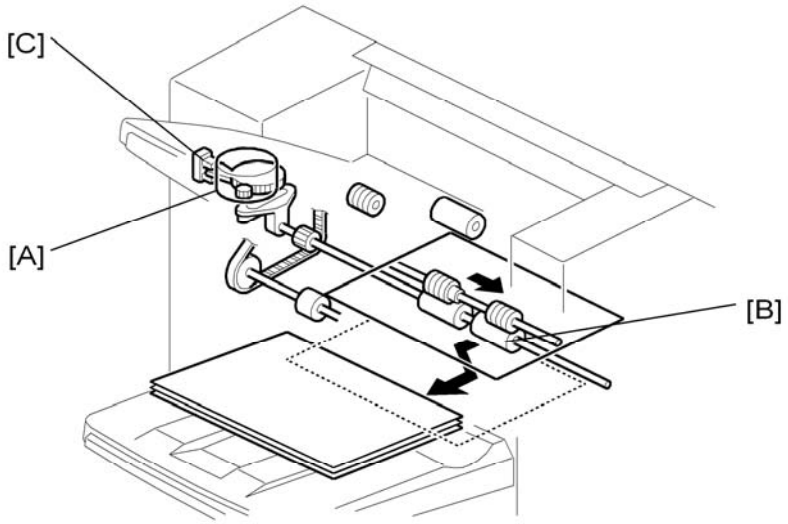


The shift motor [A] moves the shift roller [B] from side to side.

The shift motor HP sensor [C] detects when the mechanism is at home position.

The upper transport motor rotates the shift roller.

When shift mode is used, the shift motor turns on after each page is fed out. Then, for the next set, the shift motor turns the other way. In this way, the user can easily divide the sets.

## 2.5 BOOKLET TRAY

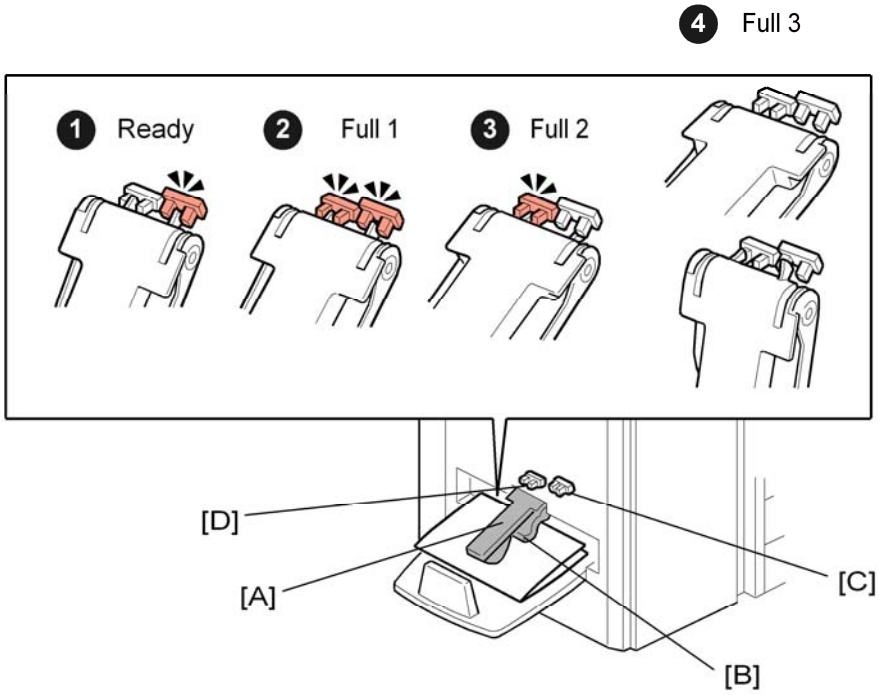


The sensor actuator arm [A] rests on the top of the stack of stapled booklets as they are output to the lower tray. A flap depressor [B] keeps the open ends of the booklets down. The front booklet tray full sensor [C] and rear booklet tray full sensor [D] detect when the tray is full of booklets.

Note

- The front booklet tray full sensor is mounted higher than the rear booklet tray full sensor.
- The booklet tray is stationary. When it becomes full, the stapling and folding job stops until booklets are removed from the tray.
- If the booklet tray is not installed (this is detected if the front and rear sensors remain OFF), the machine will not operate in the booklet staple and fold mode. When booklet mode is selected, the tray full message appears on the operation panel.

The combinations of the two actuators and two sensors when the actuator arm rises determines the number of booklets that the tray can hold before the job stops.

Tray full detection depends on the size of the paper and the number of sheets in one stapled and folded booklet.

The condition detected by the machine (❶ Ready ❷ Full 1, ❸ Full 2, ❹ Full 3; see the illustration above) depends on the states of the sensors, as shown in the table below.

Booklet Tray

| Condition | Front Sensor | Rear Sensor |
|---|---|---|
| Ready | ON | OFF |
| Full 1 | ON | ON |
| Full 2 | OFF | ON |
| Full 3 (or booklet tray not installed) | OFF | OFF |

In the tables below:

- "Sht" denotes "sheets in a stack".
- "Cnt" denotes "Count" (see below for an explanation).

After a booklet is feed out, the fold roller motor stops the exit roller. The machine then monitors the tray full sensors every feed-out of a paper stack. The machine checks a certain condition, based on the size of the paper and the number of sheets in the booklet. Two examples are shown below the table. Tell the operators that the number of sheets that the lower tray can hold will vary greatly.

**- Lower Tray Full Condition Tables -**

**A3 (DLT)**

| **Sheet** | **1** | **2** | **3** | **4** | **5** | **6** | **7** | **8** | **9** | **10** |
|---|---|---|---|---|---|---|---|---|---|---|
| **Full 1** | **15 Cnt** | - | - | - | - | - | - | - | - | - |
| **Full 2** | - | 3 Cnt | 11 Cnt | - | - | - | - | - | - | - |
| **Full 3** | - | - | - | 16 Cnt | 12 Cnt | 2 Cnt | 3 Cnt | 5 Cnt | 6 Cnt | 7 Cnt |

**A4 (LT)**

| **Sheet** | **1** | **2** | **3** | **4** | **5** | **6** | **7** | **8** | **9** | **10** |
|---|---|---|---|---|---|---|---|---|---|---|
| **Full 1** | **15 Cnt** | - | - | - | - | - | - | - | - | - |
| **Full 2** | - | 8 Cnt | 16 Cnt | 19 Cnt | **5 Cnt** | 2 Cnt | 2 Cnt | 2 Cnt | 3 Cnt | 4 Cnt |
| **Full 3** | - | - | - | - | - | - | - | - | - | - |

**- Examples -**

After the copier makes a booklet with 1 sheet of 11 x 17 inch paper, the machine checks every feed-out of a paper stack for the 'Full 1' condition. If the Full 1 condition occurs 15 times ('**15 Cnt'** in the table above), the machine detects that the tray is full.

After the copier makes a booklet with 5 sheets of A4/LT paper, the machine checks every feed-out of a paper stack for the 'Full 2' condition. If the Full 3 condition occurs 5 times ('**5 Cnt'** in the table above), the machine detects that the tray is full.

## 2.6 JOGGER UNIT

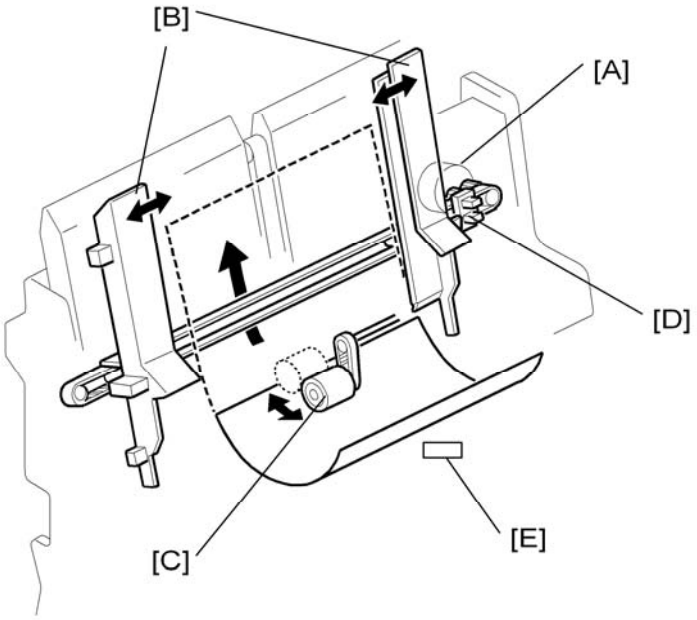


The jogger is used in corner-staple mode and in booklet mode.

For each sheet of paper when it arrives in the staple tray, the following is done.

- The jogger motor [A] drives the jogger fences [B].
- The positioning roller solenoid moves the positioning roller [C] onto the top of the sheet. Then the lower transport motor turns on and the positioning roller rotates to push the sheet of paper against the stopper (there are two stoppers: stopper L or stopper S the one that is used depends on the paper size, as we shall see later.)

The jogger HP sensor [D] detects when the jogger fences are at home position (away from the stack).

The staple tray exit sensor [E] detects if a jam occurs when the machine feeds the stack out at the bottom of the jogger tray.

## 2.7 EXIT GUIDE PLATE, PAPER FEED OUT

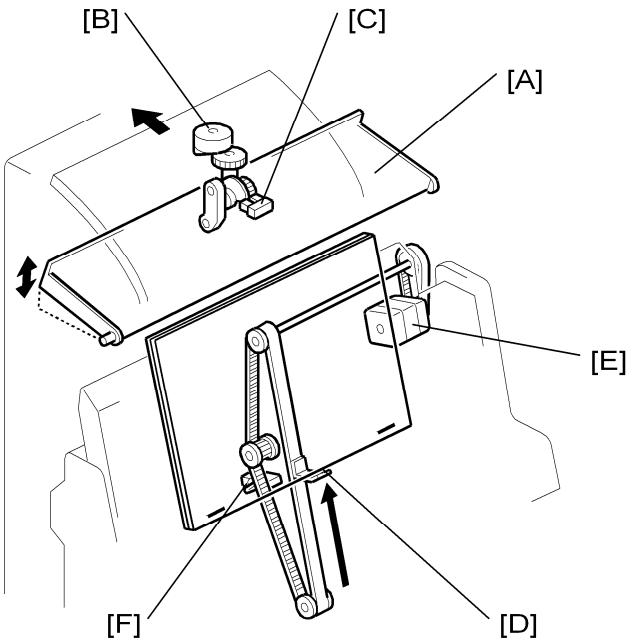


The exit guide plate [A] opens when a stapled stack is fed out.

Also it opens every time a sheet is fed to the staple tray, to prevent the paper running into the exit roller during stacking.

The exit guide plate motor [B] drives the exit guide plate. The exit guide plate HP sensor [C] detects when the guide plate is at home position.

The stack feed-out belt feeds out stapled stacks. The pawl [D] on the belt moves the stack out to the exit.

The stack feed-out motor [E] drives the belt. The stack feed-out HP sensor [F] detects when the belt is at home position.

# 2.8 STAPLER UNIT MOVEMENT

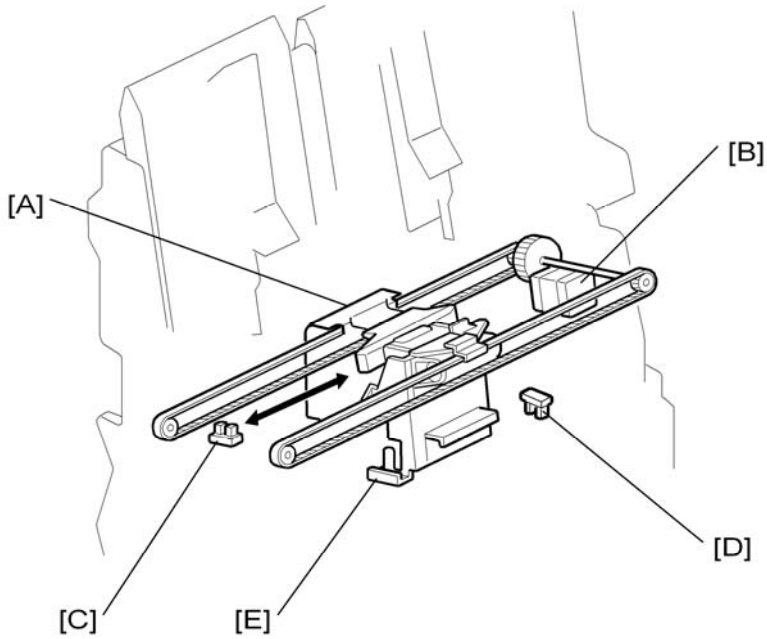


The machine has only one stapler [A]. It does stapling for booklets and for corner stapling. The stapler unit motor [B] moves the stapler from side to side. The stapler unit HP sensor [C] detects when the stapler unit is at home position.

In corner staple mode, at the start of the job, the stapler moves to the position where the stapler will be inserted.

In booklet mode, at the start of a job, the stapler moves to a starting position that depends on the paper size, as follows:

- 8.5 x 14 inches or shorter: Rear side staple position
- Longer than 8.5 x 14 inches: Center position. When the stapler is at the center position, bracket [E] releases ‘stopper L’, which catches the bottom edge of the paper for booklet stapling with longer paper sizes. This will be described in a later section.

If the stapler safety sensor [D] detects the stapler unit at its initialization, the stapler unit stops moving until the stack feed out belt pawl and stopper S are at home position. If the stapler unit does not stop, it could collide with the pawl and/or the stopper.

# 2.9 STACKING FOR BOOKLET STAPLING

## 2.9.1 OVERVIEW

There are two stoppers near the stapler unit. These stoppers hold the stack of paper in the correct position during stacking.

The stoppers are called ‘stopper S’ and ‘stopper L’. Stopper S is used for legal size paper, or shorter than 8.5 x 14 inches. Stopper L is used for paper that is longer than 8.5 x 14 inches.

Note

- In corner stapling mode, the pawl on the stack feed-out belt holds the stack of paper. For booklet stapling, this pawl stays at home position, which is on the rear side, so it does not interfere with booklet stapling.

## 2.9.2 8.5 X 14 (LEGAL) OR SHORTER

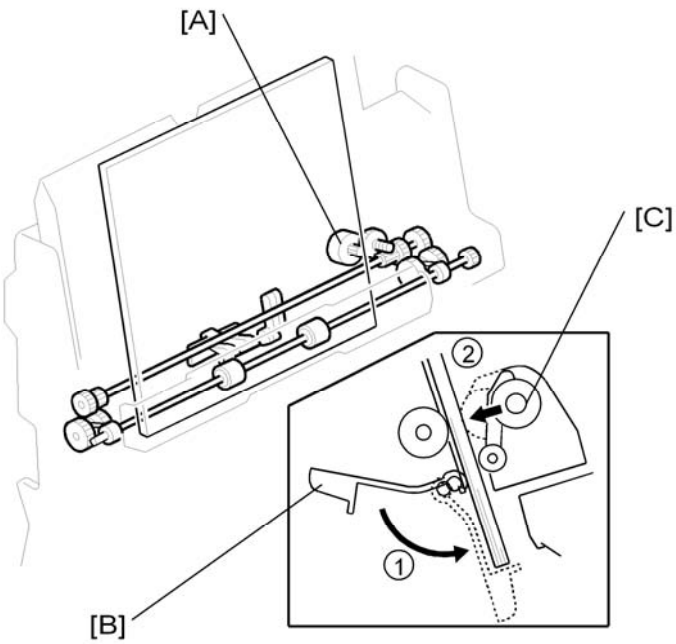


At the start of the set, the upper retraction motor [A] turns on, and stopper S [B] moves down into position to catch the paper ①. The upper retraction motor also moves the upper clamp roller [C] into contact with the stack ②.

Stacking for Booklet Stapling

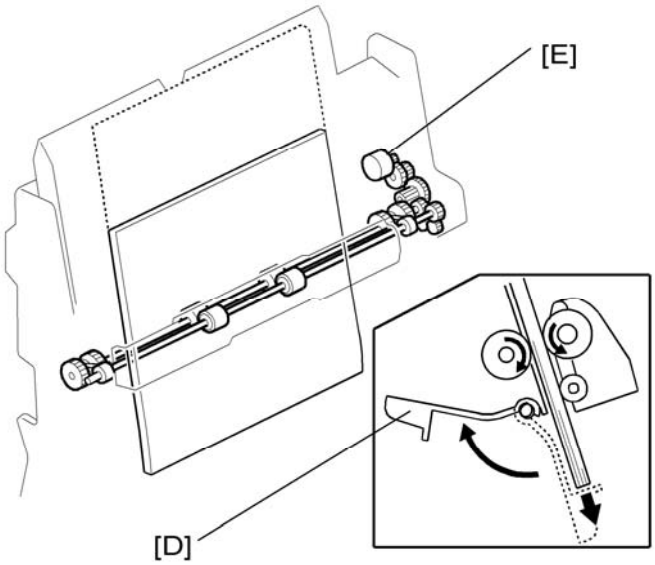


When the stack is complete, stopper S moves away [D], and the machine feeds the stack to the correct position for stapling. To do this, the upper clamp roller motor [E] rotates the upper clamp roller.

## 2.9.3 LONGER THAN 8.5 X 14 INCHES

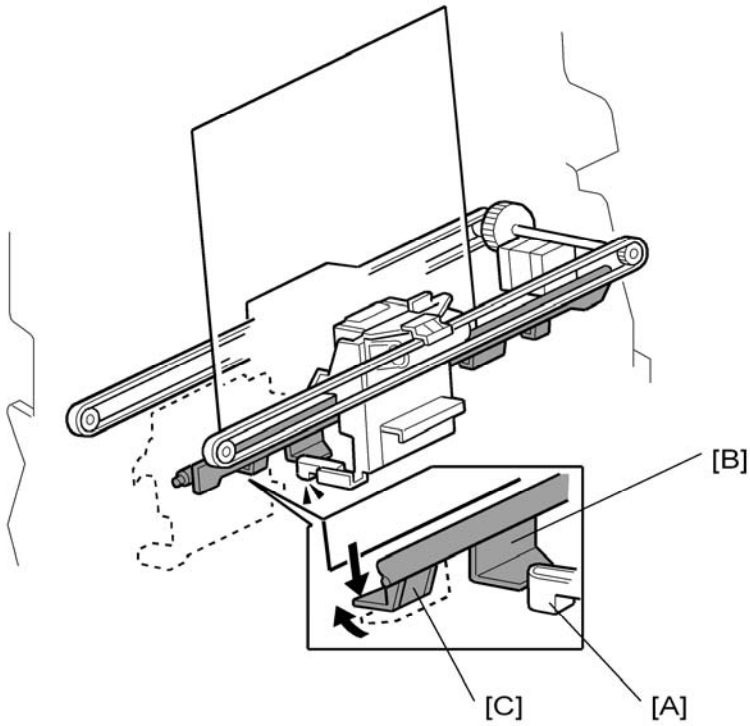


At the start of the set, the stapler moves to the center position. At this position, a bracket [A] on the stapler unit pushes stopper L [B]. The pawl [C] on the stopper L assembly then moves into position to catch the paper. The upper clamp roller holds the stack (see the

previous section).

When the stack is complete, the stapler moves to the rear-side position, and stopper L moves away. The machine feeds the stack to the correct position for stapling.

## 2.10 MOVING THE STACK TO THE FOLDING POSITION

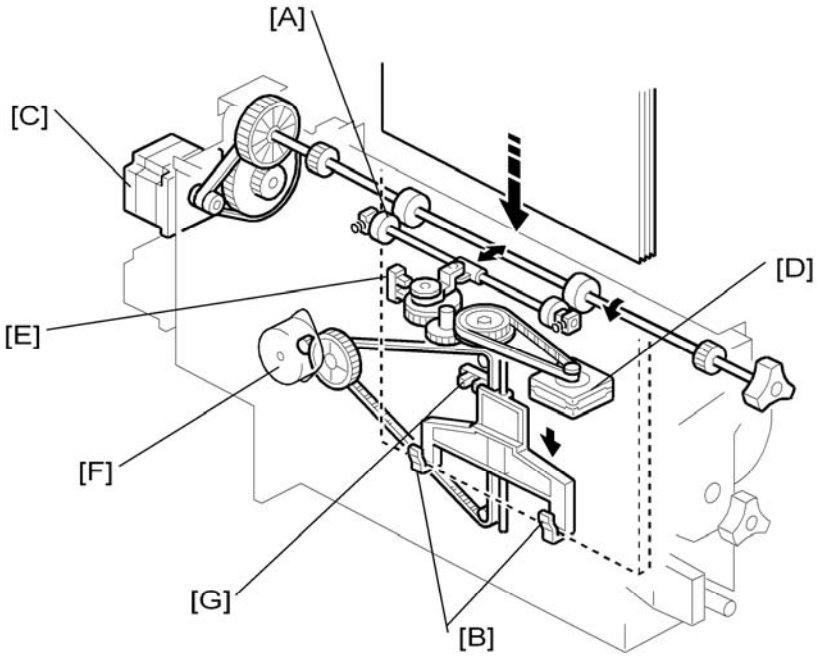


First, the upper clamp roller feeds the stack down after the stack has been stapled. When the lower clamp roller [A] catches the stack, the upper clamp roller stops, and the lower clamp roller feeds the stack down.

The lower clamp roller is released just before the leading edge of the stack reaches the bottom fence [B] (this fence consists of two pawls that catch the paper). The bottom fence moves the stack to the folding position

The fold roller motor [C] turns the lower clamp roller.

The lower retracting motor [D] moves the lower clamp roller against and away from the stack. The lower clamp roller HP sensor [E] detects when the lower clamp roller is moved to the home position.

The bottom fence lift motor [F] moves the bottom fence up and down. The bottom fence HP sensor [G] detects when the bottom fence is at home position.

# 2.11 FOLDER

## 2.11.1 OVERVIEW

The fold plate pushes the stack into the nip between the fold rollers. The fold rollers feed out the stack, then reverse to feed it back in again. Then, the fold rollers feed the stack out of the folder, to the booklet tray.

## 2.11.2 FOLD PLATE

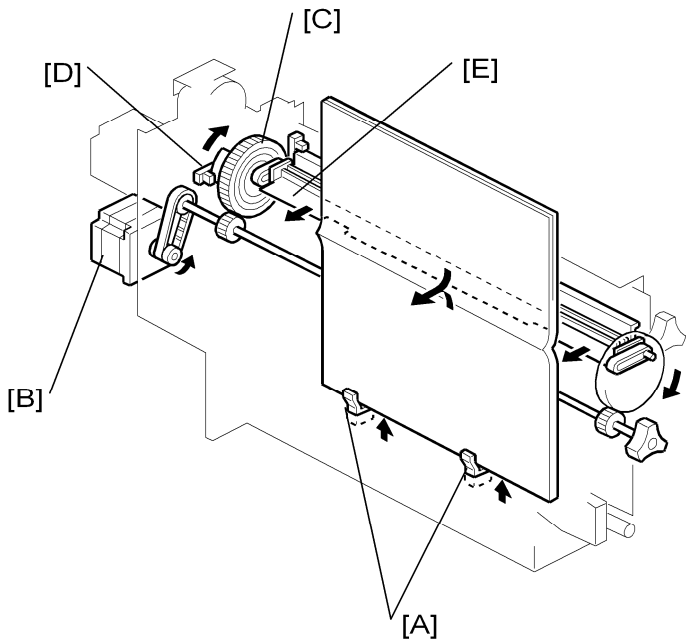


[A]: Bottom Fence Stack Stoppers. Catches the stack after it is released by the clamp rollers.

[B]: Fold Plate Motor. Drives the timing belt and gears that move the fold plate.

[C]: Fold Plate Cam. Controls the movement of the fold plate to the left (into the nip of the fold rollers) and right (toward the fold plate home position).

[D]: Fold Plate HP Sensor. Controls operation of the fold plate motor.

[E]: Fold Plate. Moves left and pushes the stack into the nip of the fold rollers and then moves right to retract.

## 2.11.3 FOLD ROLLERS

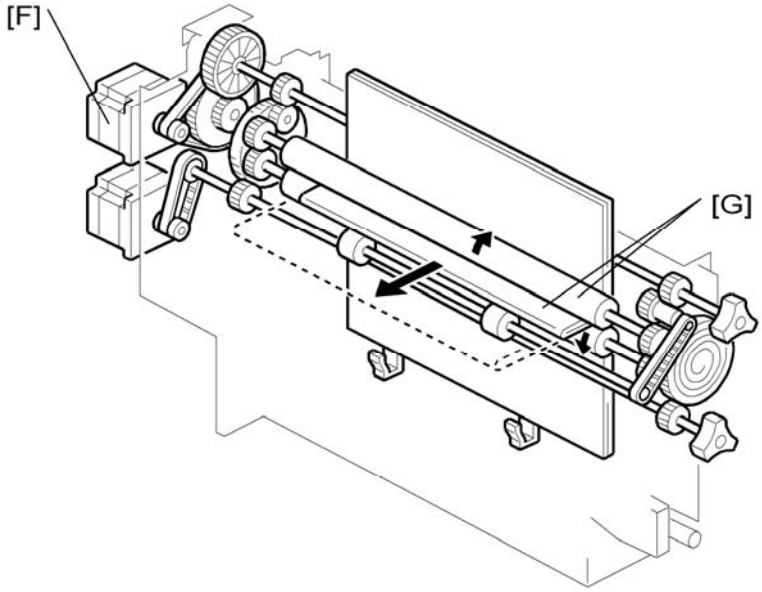


[F]: Fold Roller Motor. Drives forward to feed out the stack at the fold, and then drives forward again to feed out the folded stack.

Note

- This cycle can be repeated by changing the setting of SP6136.

[G]: Fold Rollers. Driven by the fold roller motor, this roller pair feeds out the stack at its fold, reverses to feed in the stack to, and then feeds forward again (assisted by the fold unit exit rollers – not shown) to feed out the stack to the lower tray.

# 2.12 PUNCH UNIT

## 2.12.1 OVERVIEW OF OPERATION

### *Skew Correction Before Punching*

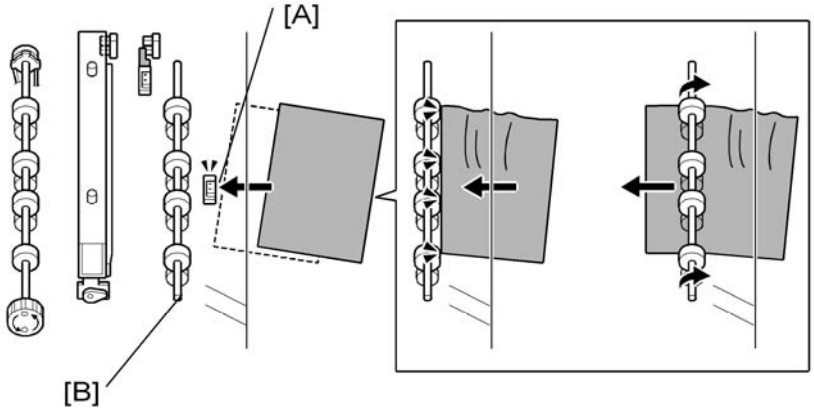


The finisher entrance roller corrects for paper skew and then the punch unit moves across to punch the holes at the correct position. Each sheet is punched one at a time.

Paper feeds out of the copier. The finisher entrance sensor [A] detects the leading edge of the sheet.

The finisher entrance roller [B] stops rotating briefly while the copier exit rollers continue to rotate. This buckles the paper against the finisher entrance roller to correct skew. The finisher entrance roller starts to rotate again and feeds the sheet into the finisher.

These SP codes adjust the skew operation in the punch unit:

- SP6130. This SP corrects the punch hole alignment. To do this, it corrects the skew of each sheet by adjusting the amount of time the finisher entrance roller remains off while the exit roller of the machine remains on. For more, see Section "5. Service Tables".
- SP6131. This SP determines whether the finisher entrance roller stops to correct skew when paper enters the finisher. You can use this SP to disable the skew correction. For more, see Section "5. Service Tables".

## *Punch Unit Position Correction*

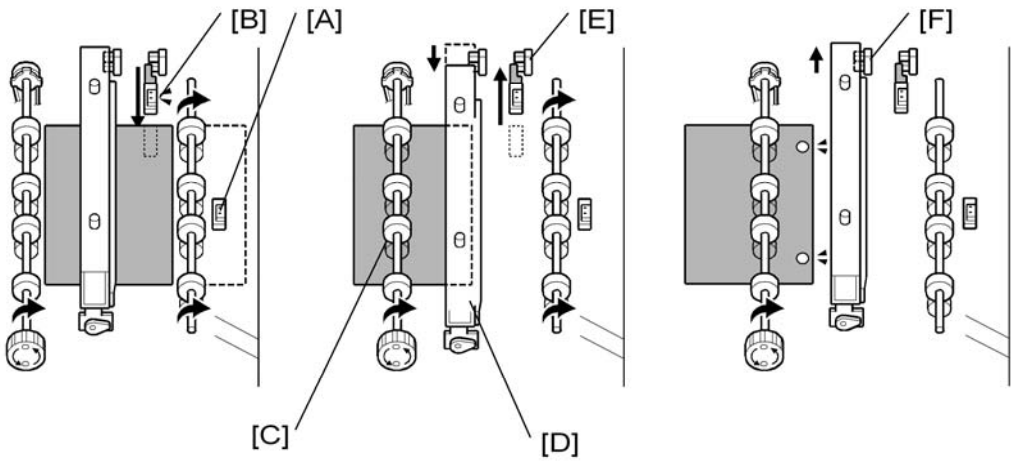


These operations (skew correction before punching, and punch unit position correction) increase the accuracy of the punch alignment.

❶

The trailing edge of the sheet passes the finisher entrance sensor [A].

The paper position slide unit moves the paper position sensor [B] forward to the edge of the paper.

The paper position sensor detects the position of the paper edge and sends this information to the punch unit board. The machine uses the detected position of the paper edge to calculate the correct position for punching.

The upper transport motor switches on and rotates the feed rollers [C] the prescribed distance to put the paper under the punch unit [D].

❷

Using the result of the position calculation, the punch unit control board moves the punch unit [D] to the adjusted punch position.

The paper position slide unit and its paper sensor, move back to the paper position slide home position sensor [E], and the punch unit fires the punches to make the holes.

❸

The feed rollers feed the punched paper out of the punch unit and into the paper path. The punch unit moves back to home position (detected by the home position sensor [F].

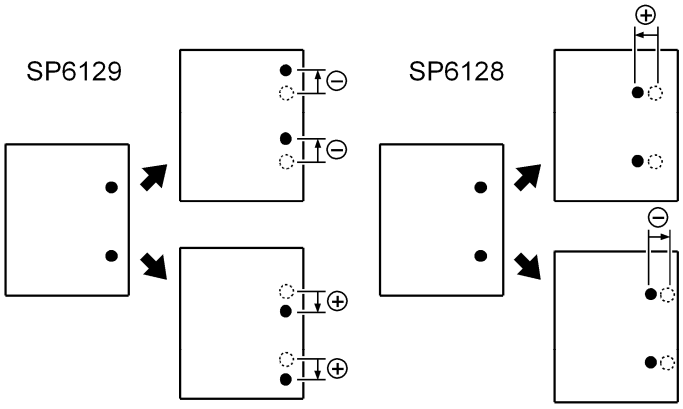


These SP codes adjust the punch hole alignment:

- SP6128 Adjusts the punch positions in the direction of paper feed.
- SP6129 Adjusts the punch position perpendicular to the direction of feed.

For more, see Section "5. Service Tables".

## 2.12.2 PAPER POSITION DETECTION

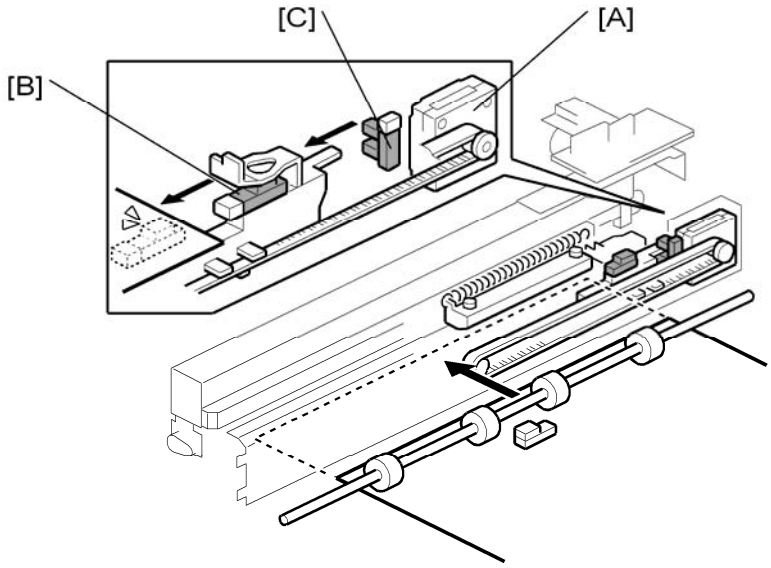


The paper position sensor slide motor [A] extends and retracts the paper position slide that holds the paper position sensor [B].

The paper position sensor detects the position of the paper edge. The detected position of the paper is used to move the punch unit across to the correct position for punching.

When the paper position slide is retracted, the paper position slide HP sensor [C] detects when the slider is at home position and stops paper position slide motor.

## 2.12.3 PUNCH UNIT MOVEMENT

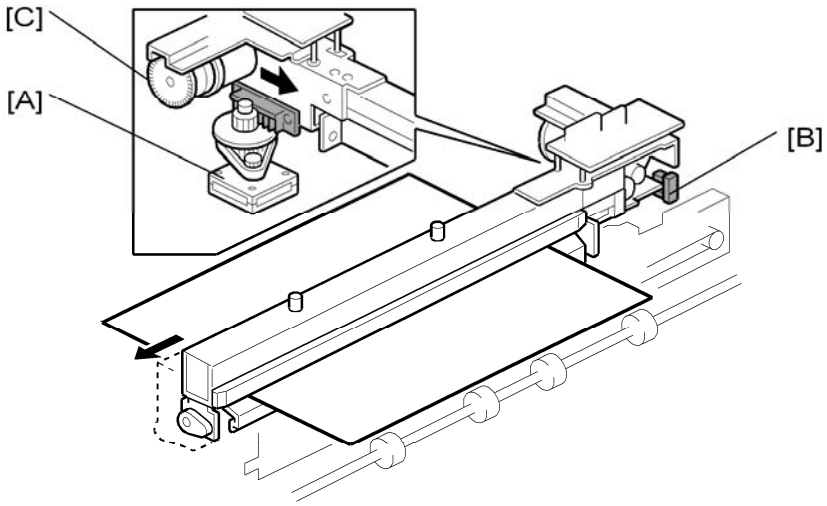


The punch movement motor [A] extends and retracts the punch unit to put it at the correct position for punching.

The punch movement HP sensor [B] detects the position when it retracts, switches off the punch movement motor, and stops the punch unit at its home position.

The punch drive motor [C] fires the punches that punch holes in the paper below.

## 2.12.4 PUNCH SELECTION AND FIRING

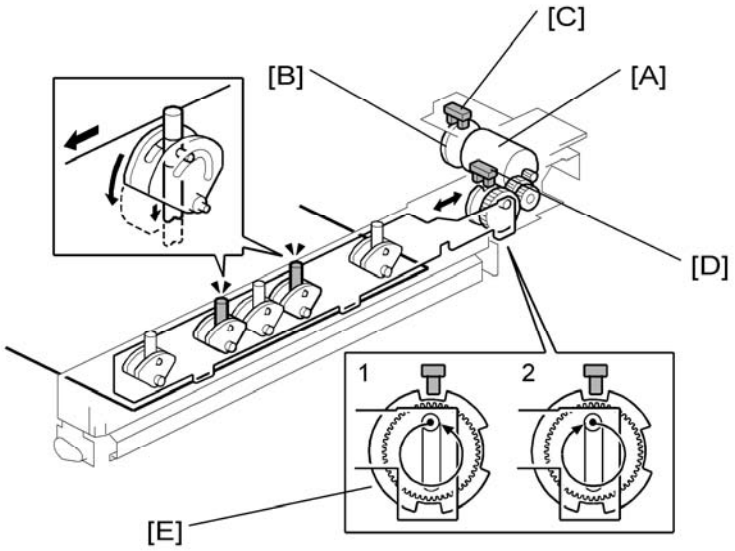


The punch drive motor [A] turns the small, notched encoder wheel [B] through the gap in the punch encoder sensor [C]. The sensor output is used to control the punch timing.

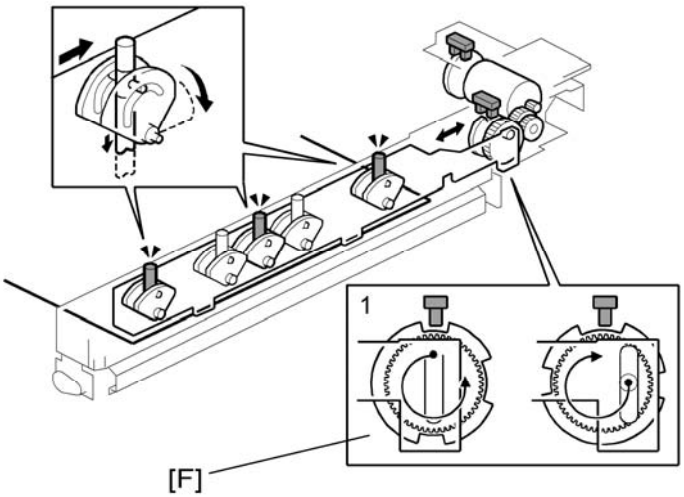


The timing for 2-hole punching [E] is different from 3-hole punching [F].

When the punch unit is at the punching position, the punch motor turns until the encoder detects the starting position for 2-hole or 3-hole punching.

- This is the '1' position in the diagrams (the first diagram is for 2-hole punching, and the second diagram is for 3-hole punching).

Then, the punch drive motor turns counter-clockwise to the '2' position. This movement punches the holes in the paper.

Then, the punch drive motor turns clockwise to the '1' position, to be ready for the next sheet of paper.



## 2.12.5 PUNCH HOPPER MECHANISM

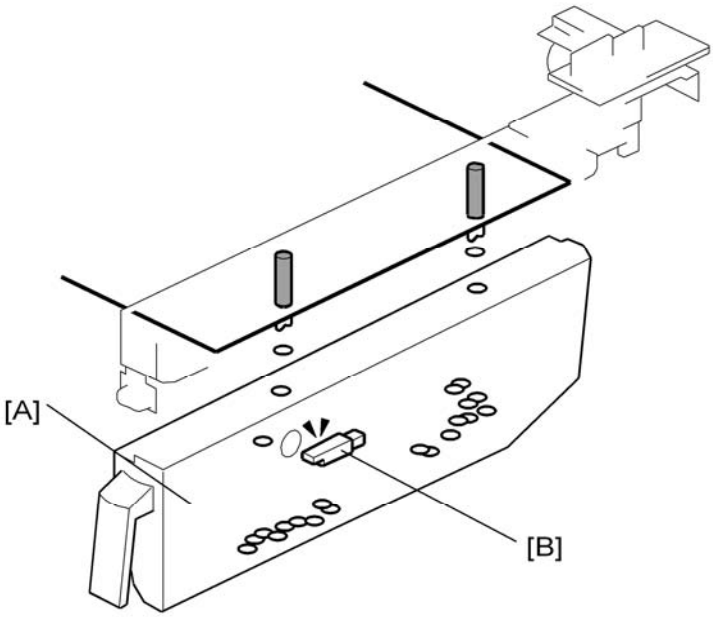


The punchouts fall from the punch unit into the punch hopper [A].

Punch Unit

The punch hopper full sensor [B] does the following:

- Signals that the hopper is full when it detects the top of the stack of punchouts that have collected in the hopper.
- Detects when the punch hopper is set properly.

# PAPER FEED UNIT PB3040

# D351

| D351 PAPER FEED UNIT PB3040 | | |
|---|---|---|
| **Page** | **Date** | **Added/Updated/New** |
| | | None |

# PAPER FEED UNIT PB3040 (D351)

## TABLE OF CONTENTS

**1. REPLACEMENT AND ADJUSTMENT ..... 1**
1.1 REAR COVER .....1
1.2 MOTORS AND CLUTCHES .....2
1.2.1 LIFT MOTORS.....2
1.2.2 UPPER AND LOWER PAPER FEED CLUTCHES .....2
1.2.3 PAPER FEED MOTOR.....3
1.3 MAIN BOARD .....4
1.4 LIFT, PAPER END, AND RELAY SENSORS .....5
1.5 PAPER FEED UNIT.....6
1.6 PICK-UP, PAPER FEED AND SEPARATION ROLLERS.....7

**2. DETAILS ..... 8**
2.1 COMPONENT LAYOUT .....8
2.1.1 MECHANICAL COMPONENT LAYOUT.....8
2.1.2 ELECTRICAL COMPONENT LAYOUT .....9
2.2 PAPER FEED .....10
2.3 PAPER SIZE DETECTION .....11
2.4 REVERSE ROLLER AND PICK-UP ROLLER RELEASE.....13
2.5 PAPER HEIGHT AND END DETECTION.....14
2.5.1 PAPER HEIGHT DETECTION .....14
2.5.2 PAPER END AND BOTTOM PLATE.....15
2.6 PAPER LIFT .....16

# Read This First

## Safety and Symbols

### Replacement Procedure Safety

**⚠CAUTION**

- Turn off the main power switch and unplug the machine before beginning any of the replacement procedures in this manual.

Symbols Used in this Manual

This manual uses the following symbols.

☛: See or Refer to

: Screws

: Connector

: Clip ring

: E-ring

# 1. REPLACEMENT AND ADJUSTMENT

## 1.1 REAR COVER



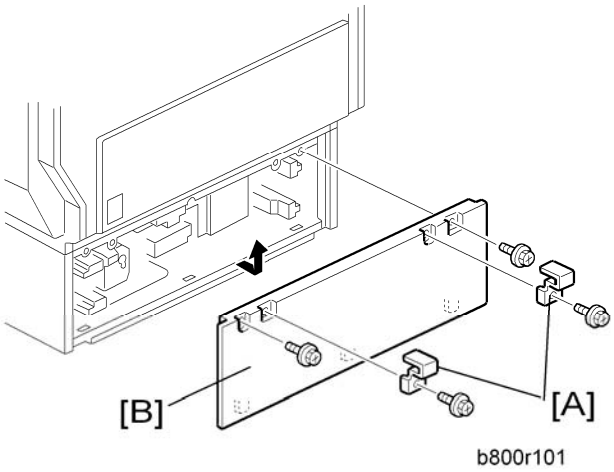


1. Securing brackets [A] (🔩 x 1 each)
2. Rear cover [B] (🔩 x 2)

# 1.2 MOTORS AND CLUTCHES

## 1.2.1 LIFT MOTORS

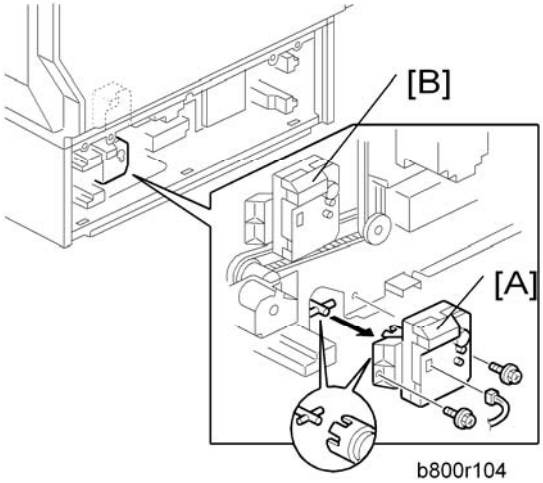


1. Rear cover (☞ "Rear Cover")
2. Lift motors [A][B] (🔩 x 2, 🖐 x 1 each)

## 1.2.2 UPPER AND LOWER PAPER FEED CLUTCHES

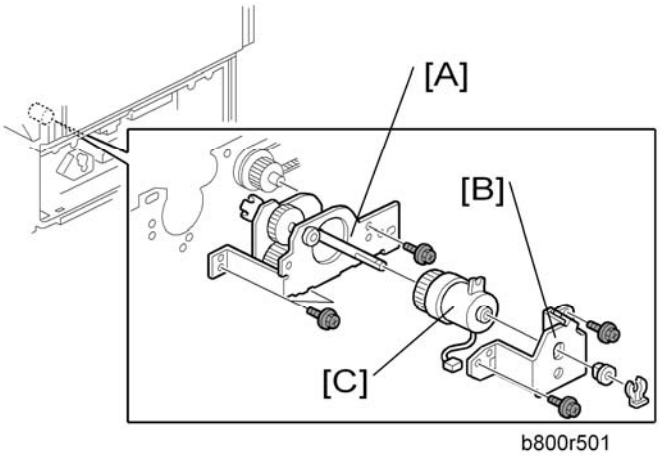


1. Rear cover (☞ "Rear Cover")
2. Upper paper feed gear unit [A] (🔩 x 3, 🖐 x 1)
3. Upper paper feed clutch bracket [B] (🗜 x 1, 🔩 x 2, bushing x 1)
4. Upper paper feed clutch [C]

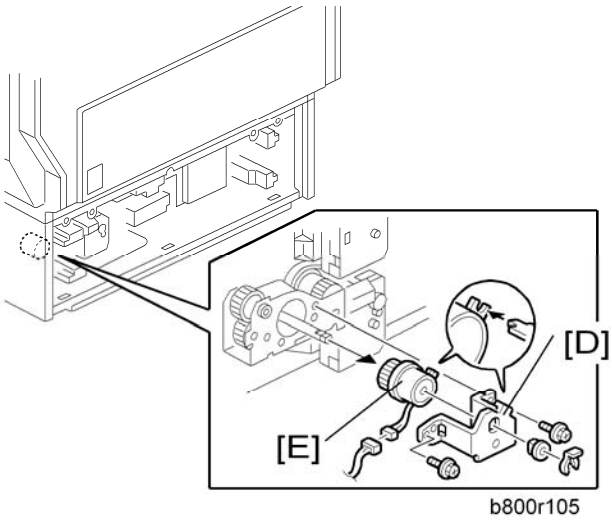


5. Lower paper feed clutch bracket [D] ( x 1, bushing x 1, x 2)
6. Lower paper feed clutch [E] ( x 1)

## 1.2.3 PAPER FEED MOTOR

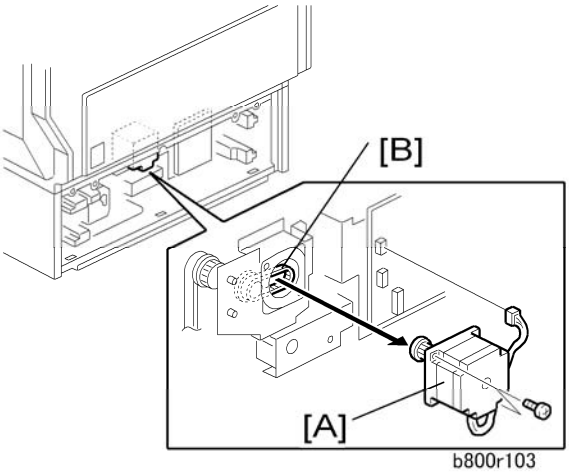


1. Rear cover ( "Rear Cover")
2. Paper feed motor [A] ( x 1, x 2)

Note

- When installing the paper feed motor, make sure that the gear of the paper feed motor holds the timing belt [B].

# 1.3 MAIN BOARD

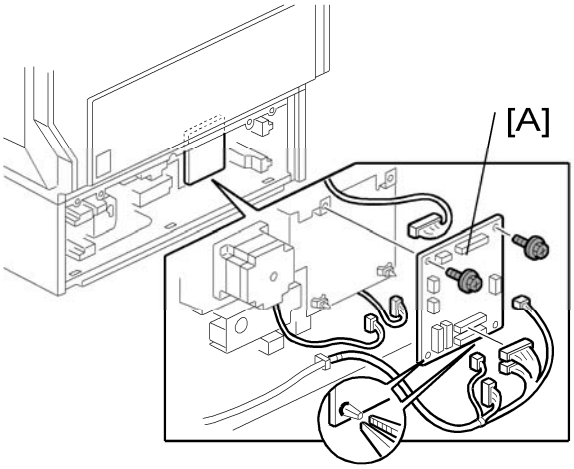


1. Rear cover (☛ "Rear Cover")
2. Main board [A] (All ☞s, ☞ x 2, snap pin x 2)

# 1.4 LIFT, PAPER END, AND RELAY SENSORS

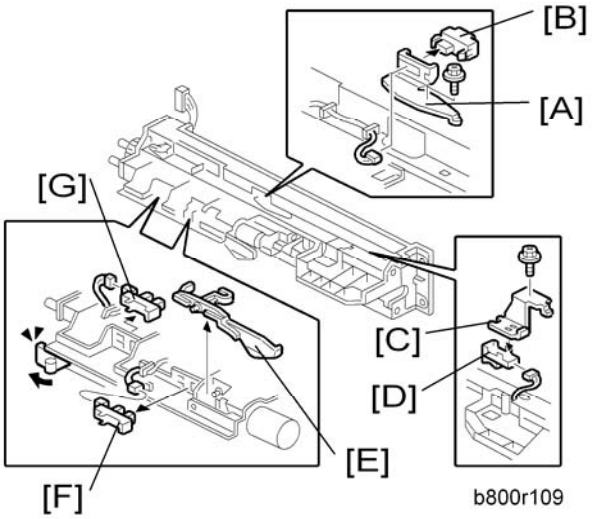


1. Paper feed unit (☛ "Paper Feed Unit")
2. Vertical transport sensor bracket [A] (🔩 x 1)
3. Vertical transport sensor [B] (📎 x 1)
4. Paper feed sensor bracket [C] (🔩 x 1)
5. Paper feed sensor [D] (📎 x 1)
6. Paper end sensor filler [E]
7. Paper end sensor [F] (📎 x 1)
8. Lift sensor [G] (📎 x 1)

# 1.5 PAPER FEED UNIT

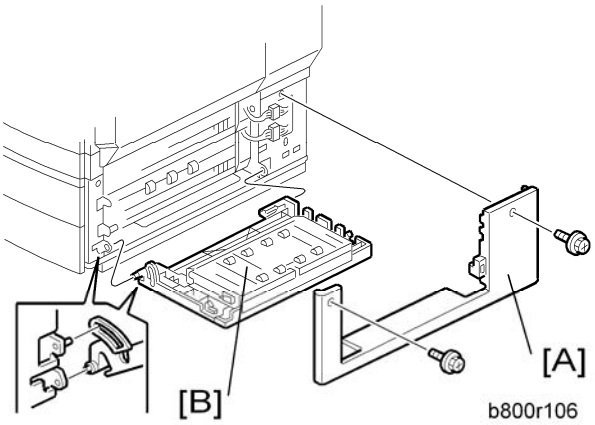


1. Right cover [A] (x 2)
2. Vertical transport guide [B] of the paper feed unit

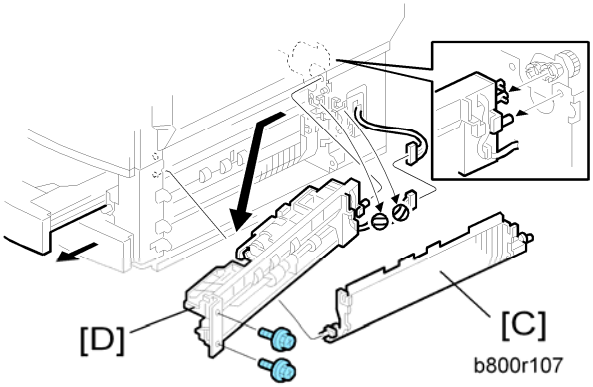


1. Pull the tray 3 (or 4).
2. Paper guide [C]
3. Paper feed unit [D] (x 2, x 1, x 2)

When replacing the paper feed unit of tray 4, do the same.

# 1.6 PICK-UP, PAPER FEED AND SEPARATION ROLLERS



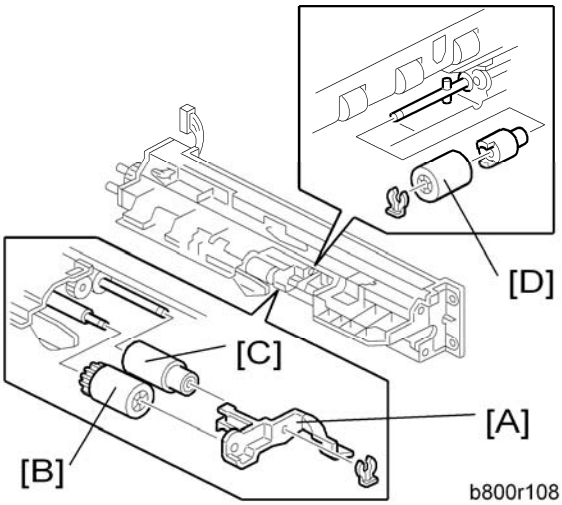


1. Paper feed unit (☛ "Paper Feed Unit)
2. Roller holder [A] (⚙ x 1)
3. Pick-up roller [B]
4. Paper feed roller [C]
5. Separation roller [D] (⚙ x 1)

# 2. DETAILS

## 2.1 COMPONENT LAYOUT

### 2.1.1 MECHANICAL COMPONENT LAYOUT

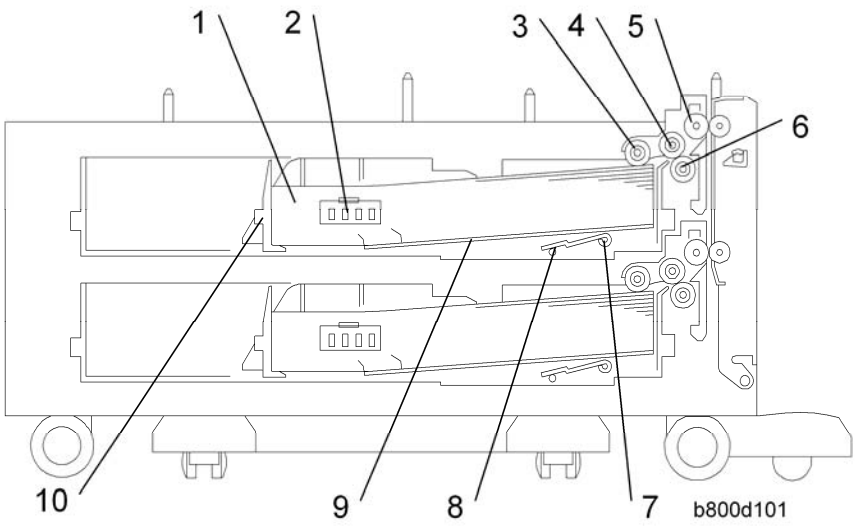


| | |
|---|---|
| 1. Upper tray | 6. Separation roller |
| 2. Paper size switch: Upper tray | 7. Tray lift arm |
| 3. Pick-up roller: Upper tray | 8. Lift arm shaft |
| 4. Paper feed roller | 9. Bottom plate |
| 5. Vertical transport roller | 10. End plate |

Note

- Listed above are the components of tray 1 (upper tray). Tray 2 (lower tray) has the same components as tray 1.

## 2.1.2 ELECTRICAL COMPONENT LAYOUT

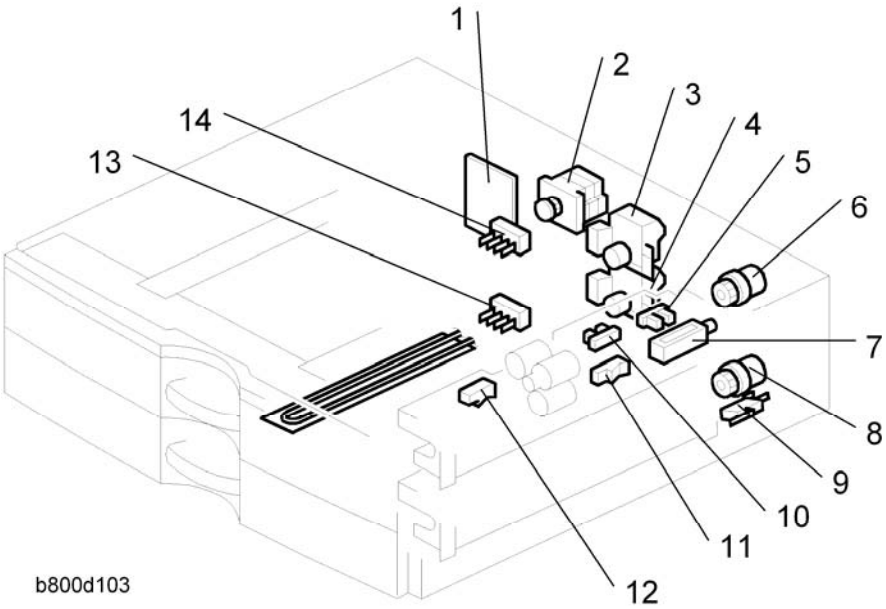


| | |
|---|---|
| 1. Main board | 8. Lower paper feed clutch |
| 2. Feed motor | 9. Vertical transport guide switch |
| 3. Upper tray lift motor | 10. Paper end sensor |
| 4. Lower tray lift motor | 11. Vertical transport sensor 1 |
| 5. Upper lift sensor | 12. Paper feed sensor |
| 6. Upper paper feed clutch | 13. Paper size switch: Lower tray |
| 7. Pick-up solenoid | 14. Paper size switch: Upper tray |

Note

- Listed above are the components of tray 1 (upper tray), except for the right cover switch and anti-condensation heater (there is only one each of these for the entire unit). Tray 2 (lower tray) has the same components as tray 1.

## 2.2 PAPER FEED

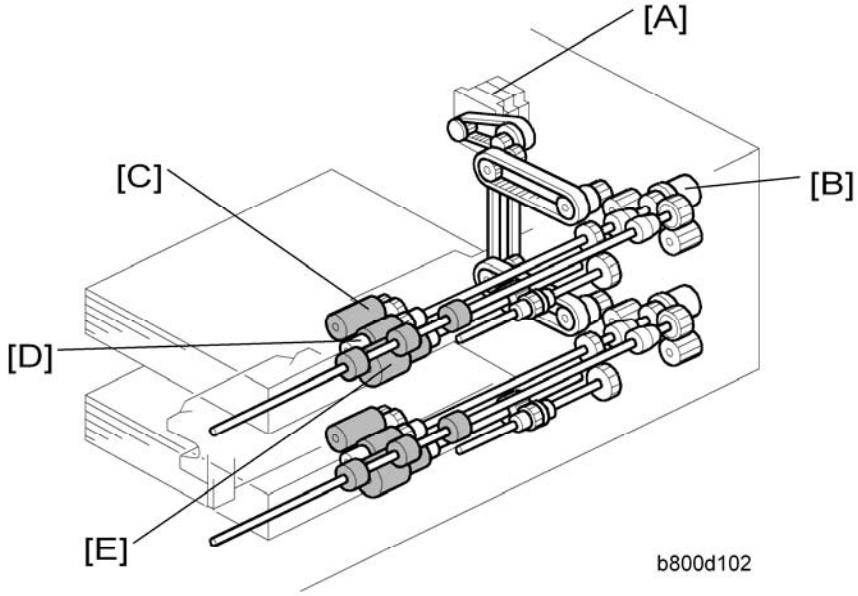


**Paper Feed Mechanism:**

An FRR (feed and reverse roller) feed mechanism is used (☛ "Paper Feed Methods" in the Core Technology Manual).

**Drive Path:**

Tray 3 (upper tray) and tray 4 (lower tray) have identical paper feed systems. The feed motor [A] drives all the rollers in the unit. The paper feed clutch [B] controls the pick-up roller [C], paper feed roller [D], and separation roller [E].

## 2.3 PAPER SIZE DETECTION

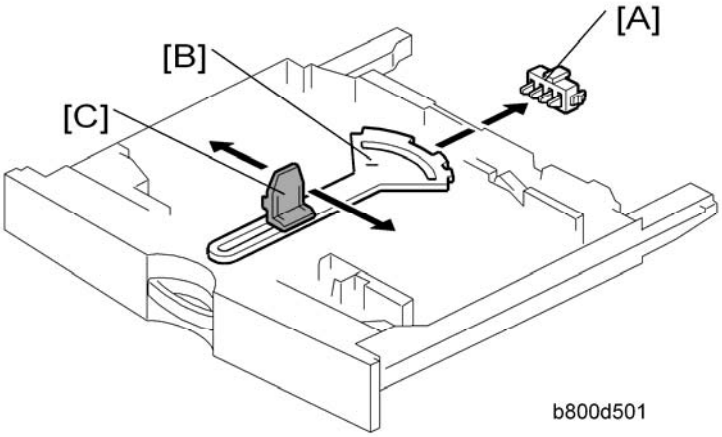


There are four paper size switches [A] working in combination. Switch 1 (right end) is for tray set detection. The other three switches detect the paper size as shown in the table below. The actuator [B] is moved by the end plate [C].

0: Not pushed, 1: Pushed

| Models | | Switch Location | | |
|---|---|---|---|---|
| **North America** | **Europe/Asia** | **SW4** | **SW3** | **SW2** |
| DLT (A3) SEF*1 | A3 (DLT) SEF*1 | 1 | 1 | 0 |
| LG (B4) SEF*2 | B4 (LG) SEF*2 | 1 | 1 | 1 |
| A4 SEF | A4 SEF | 0 | 0 | 1 |
| B5 SEF | B5 SEF | 0 | 0 | 0 |
| LT (A4) LEF*3 | A4 (LT) LEF*3 | 0 | 1 | 1 |
| B5 (Exe) LEF*4 | B5 (Exe) LEF*4 | 1 | 0 | 1 |
| A5 LEF | A5 LEF | 0 | 1 | 0 |

Note

- *1: Detects either DLT SEF or A3 SEF, depending on the setting of SP5-181-7 or 11.
- *2: Detects either LG SEF or B4 SEF, depending on the setting of SP5-181-8 or 12.

Paper Size Detection

- *3: Detects either LT LEF or A4 LEF, depending on the setting of SP5-181-6 or 10.
- *4: Detects either Exe LEF or B5 LEF, depending on the setting of SP5-181-9 or 13

The machine disables paper feed from a tray if the paper size cannot be detected (if the paper size actuator is broken or no tray is installed).

For non-standard paper sizes, if they are not visible on the user tool screen for selecting paper sizes, then set SP 5-112 to 1. If the user selects one of these sizes, auto paper size selection is disabled.

## 2.4 REVERSE ROLLER AND PICK-UP ROLLER RELEASE

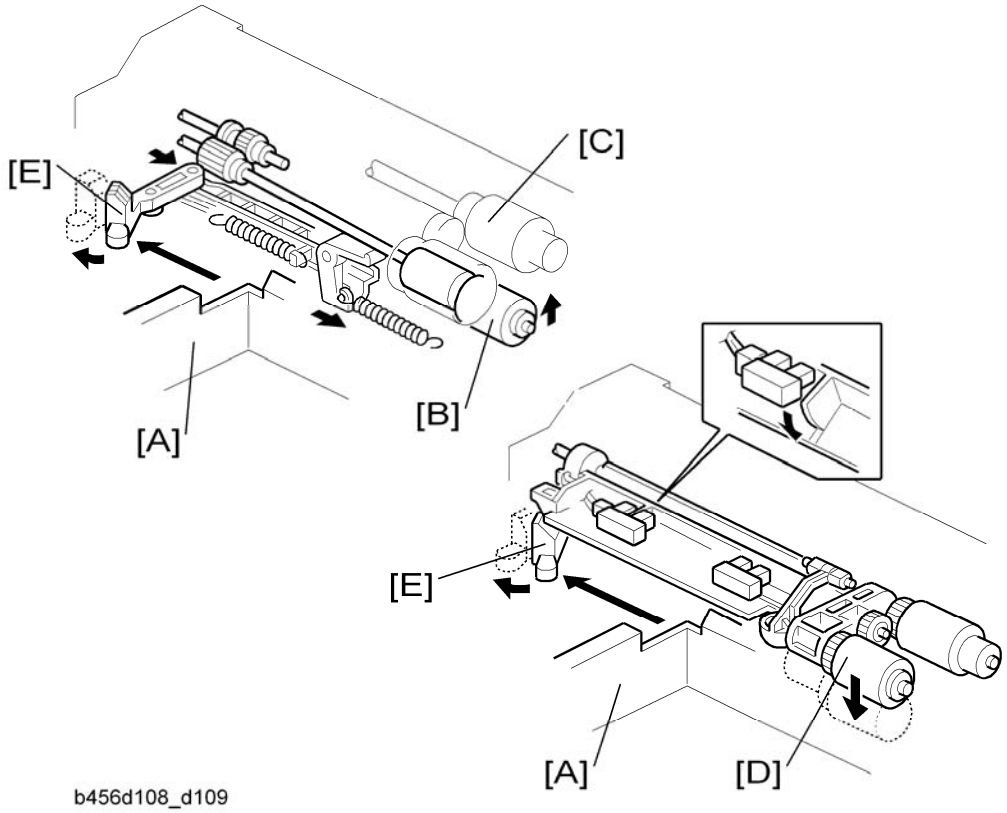


The pick-up roller and separation roller release the paper when it is not being fed. This helps remove jammed paper easily.

When the paper tray [A] is not in the machine, the separation roller [B] is away from the paper feed roller [C] and the pick-up roller stays in its upper position.

When the paper tray is pushed into the machine, it pushes the release lever [E]. This causes the pick-up roller [D] to go down into contact with the top sheet of paper, and causes the reverse roller [B] to move up and contact the paper feed roller.

# 2.5 PAPER HEIGHT AND END DETECTION

## 2.5.1 PAPER HEIGHT DETECTION

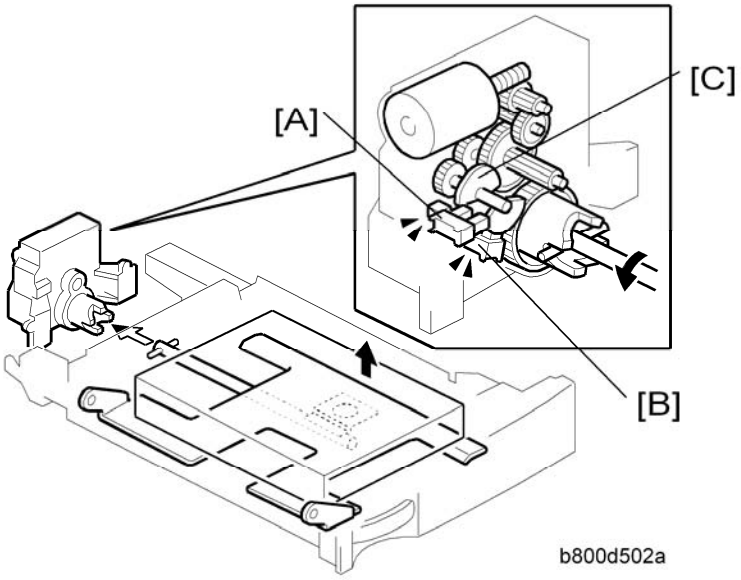


Two paper height sensors [A] [B] and actuator [C] are built into the paper tray lift motor. The paper height sensors, detect the amount of paper in the tray.
The actuator [C] has two semicircles, and it is engaged with the lift arm shaft via gears. The paper height sensors detect the paper size depending on the position of the two semicircles. The list shown below shows the detection combination of the two sensors.
The paper remaining status bar is displayed in the tray selection icon on the LCD.

| Remaining paper | Paper height sensor 1 [A] | Paper height sensor 2 [B] |
|---|---|---|
| 100%<br>(Status bar x 4) | OFF | OFF |
| 70%<br>(Status bar x 3) | ON | OFF |
| 30%<br>(Status bar x 2) | ON | ON |
| 10%<br>(Status bar x 1) | OFF | ON |

OFF: No actuator

## 2.5.2 PAPER END AND BOTTOM PLATE

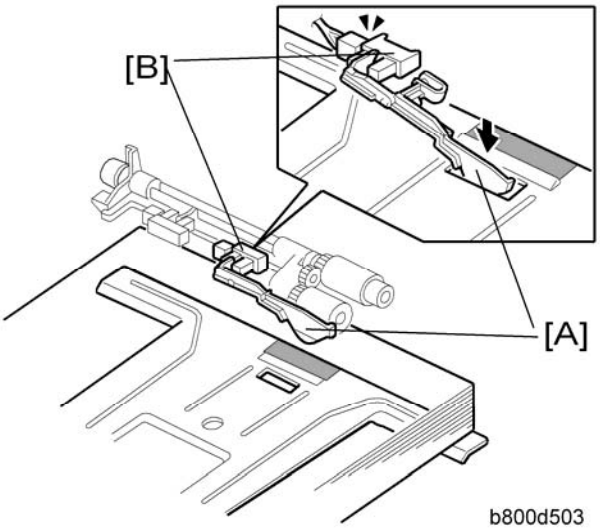


The paper stack raises the paper end feeler [A] and the paper end sensor [B] deactivates if there is some paper in the paper tray.

When the paper tray runs out of paper, the paper end feeler [A] drops into the cutout in the tray bottom plate. At this time the paper end sensor [B] activates

## 2.6 PAPER LIFT

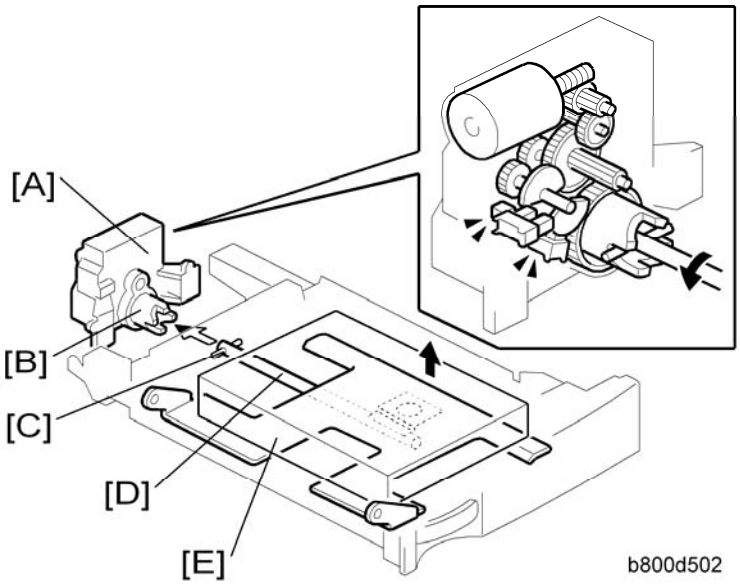


When the machine detects that a tray has been placed in the machine, the tray lift motor [A] rotates and the coupling gear [B] on the tray lift motor engages the pin [C] on the lift arm shaft [D]. Then the tray lift arm lifts the tray bottom plate [E] until the paper lift sensor for the tray detects that the top of the stack is at the paper feed position.

When the tray is removed from the machine, the connection between the coupling gear and lift arm shaft is disengaged, and the tray bottom plate lowers.

# LCIT PB3050

# D352

| D352 LCIT PB3050 | | |
|---|---|---|
| **Page** | **Date** | **Added/Updated/New** |
| | | None |

# LCIT PB3050 (D352)

## TABLE OF CONTENTS


**1. REPLACEMENT AND ADJUSTMENT ..... 1**

1.1 LEFT AND RIGHT TRAY ..... 1

1.2 SENSORS ..... 2

1.2.1 PAPER HEIGHT SENSORS ON THE PAPER STORAGE SIDE ..... 2

1.2.2 END FENCE HP SENSOR/PAPER END SENSOR 2 ..... 2

1.3 CHANGING THE TRAY SIZE ..... 3

1.4 MAIN BOARD ..... 4

1.5 CLUTCHES ..... 5

1.5.1 STACK TRANSPORT CLUTCH ..... 5

1.5.2 PAPER FEED CLUTCH ..... 5

1.6 PAPER FEED UNIT ..... 6

1.7 MOTORS ..... 7

1.7.1 TRAY LIFT MOTOR ..... 7

1.7.2 TRAY MOTOR ..... 8

1.8 PICK-UP, FEED AND SEPARATION ROLLERS ..... 9

1.9 PAPER FEED, PAPER END, LIFT AND RELAY SENSORS ..... 10

1.10 PAPER FEED ..... 11

**2. DETAILS ..... 12**

2.1 COMPONENT LAYOUT ..... 12

2.1.1 MECHANICAL COMPONENT LAYOUT ..... 12

2.1.2 ELECTRICAL COMPONENT LAYOUT ..... 13

2.1.3 ELECTRICAL COMPONENT DESCRIPTIONS ..... 14

2.2 SEPARATION ROLLER AND PICK-UP ROLLER RELEASE ..... 16

2.3 TRAY LIFT ..... 17

2.4 PAPER AMOUNT DETECTION ..... 18

2.5 PAPER END DETECTION (PAPER FEED SIDE) ..... 19

2.6 PAPER STACK TRANSPORT ..... 20

# Read This First

## Safety and Symbols

### Replacement Procedure Safety

**⚠CAUTION**

- Turn off the main power switch and unplug the machine before beginning any of the replacement procedures in this manual.

### Symbols Used in this Manual

This manual uses the following symbols.

☛: See or Refer to

: Screws

: Connector

: Clip ring

: E-ring

# 1. REPLACEMENT AND ADJUSTMENT

## 1.1 LEFT AND RIGHT TRAY

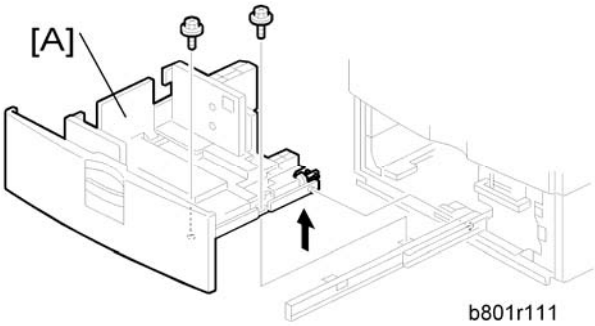


1. Pull the LCT drawer.

Note

- If the right tray comes up with the left tray, push the right tray into the LCT.

2. Left tray [A] (☞x 2)

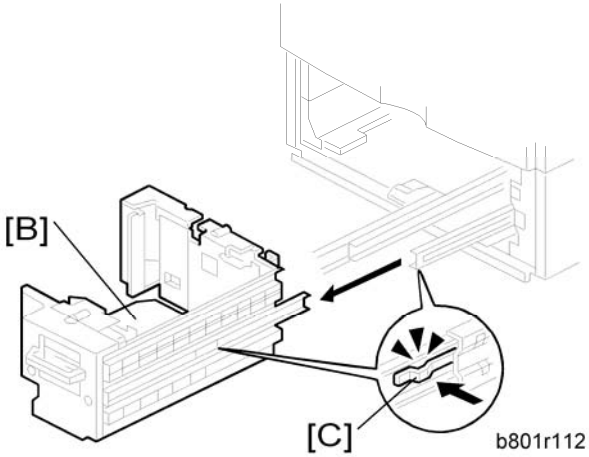


3. Remove the right tray [B] while pressing down the stopper [C].

Note

- When reinstalling the tray, set the tray on the guide rail and carefully push the tray in, making sure to keep the tray level.

# 1.2 SENSORS

## 1.2.1 PAPER HEIGHT SENSORS ON THE PAPER STORAGE SIDE

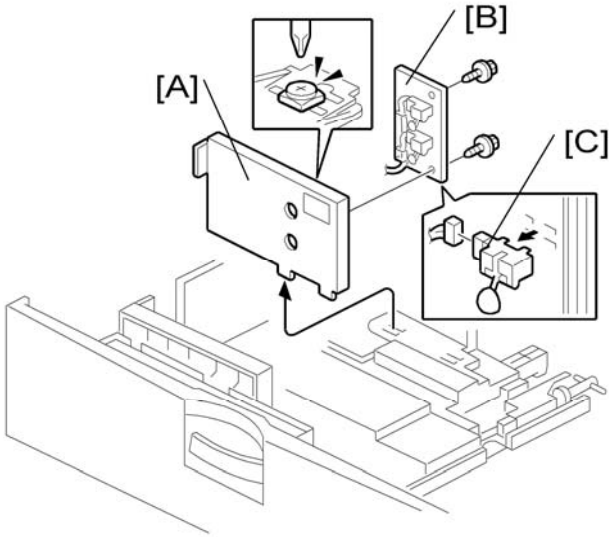


1. Tray (☛ "Left and Right Tray")
2. Rear fence [A] (🔩 x 1)
3. Rear fence bracket [B] (🔩 x 2)
4. Paper height sensors [C] (✋ x 1 each)

## 1.2.2 END FENCE HP SENSOR/PAPER END SENSOR 2

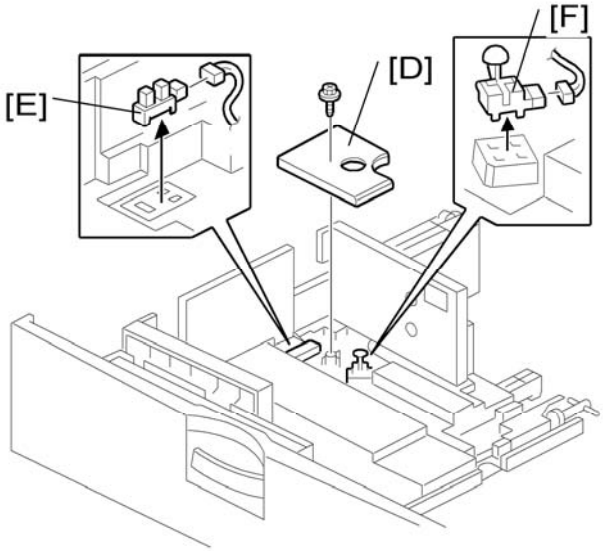


1. Bottom cover [D] (🔩 x 1)
2. End fence HP sensor [E] (✋ x 1)
3. Paper end sensor 2 (paper storage side) [F] (✋ x 1)

# 1.3 CHANGING THE TRAY SIZE

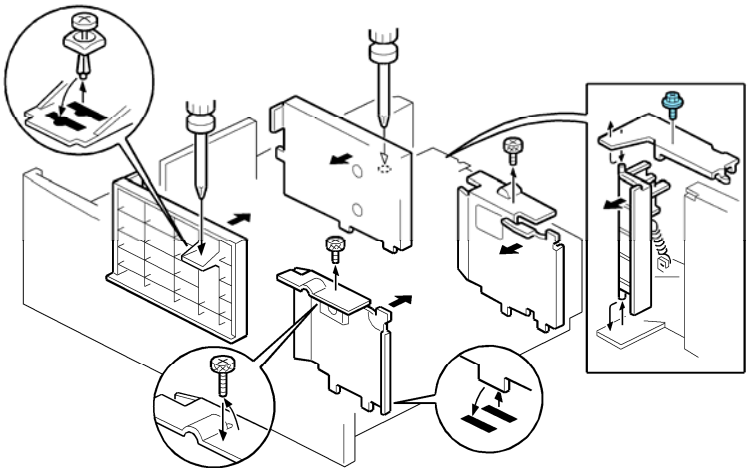

1. Remove the fence screws (x 5).
2. Change the position of the fences.

Note

- Before fastening the screws, set paper in the tray.

# 1.4 MAIN BOARD

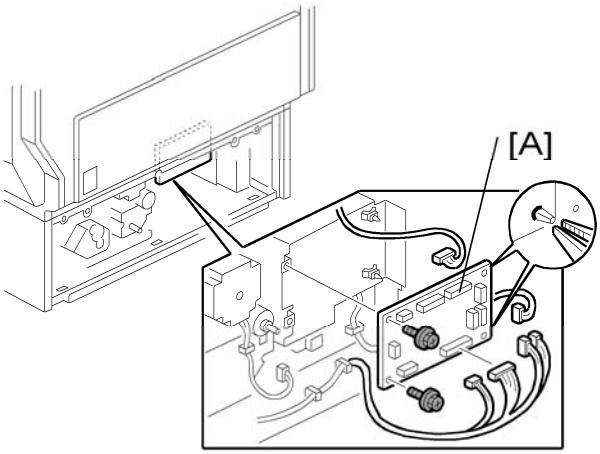


b801r102

1. Rear cover (☞ "Tray Lift Motor" )
2. Main board [A] (All ☞s, ☞ x 2, snap x 2)

# 1.5 CLUTCHES

## 1.5.1 STACK TRANSPORT CLUTCH

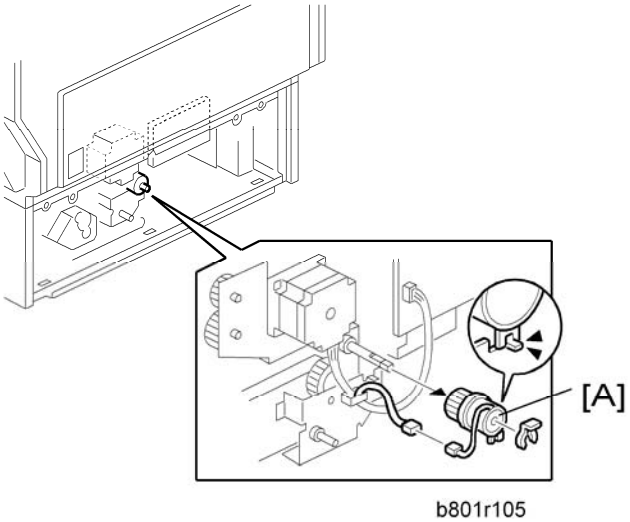


1. Rear cover (☞ "Tray Lift Motor")
2. Stack transport clutch [A] (☶ x 1, ⚙ x 1)

## 1.5.2 PAPER FEED CLUTCH

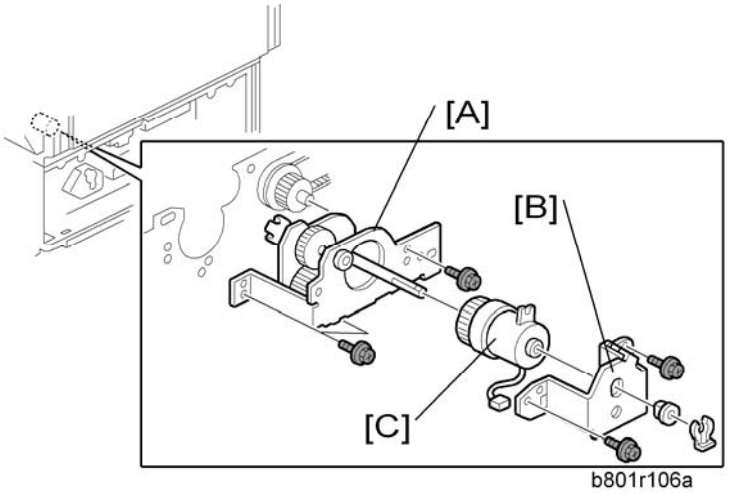


1. Rear cover (☞ "Tray Lift Motor")
2. Paper feed gear unit [A] (✎ x 3, ☶ x 1)
3. Paper feed clutch bracket [B] (⚙ x 1, ✎ x 2, bushing x 1)
4. Paper feed clutch [C]

# 1.6 PAPER FEED UNIT

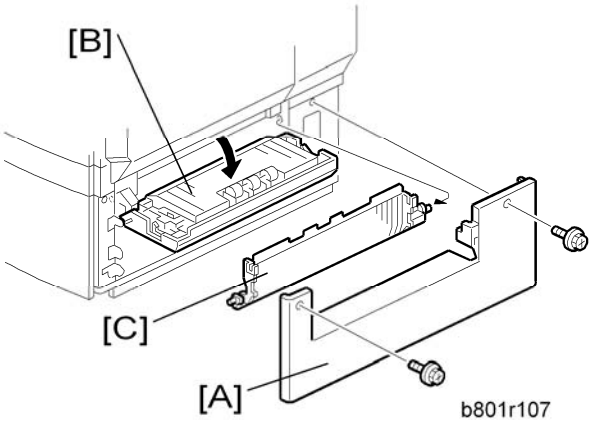


1. Right cover [A]
2. Open the vertical guide plate [B]
3. Guide plate [C]

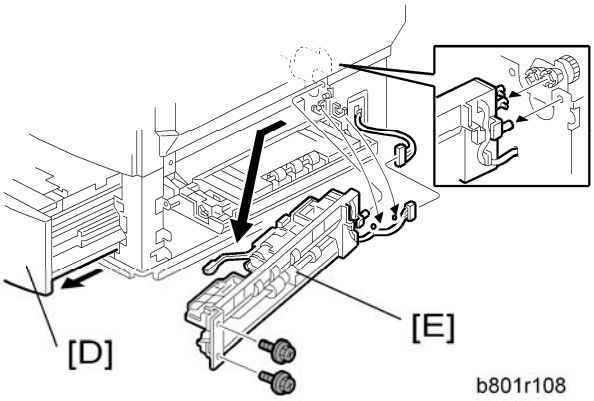


4. Pull the LCT drawer [D].
5. Paper feed unit [E] ( x 2, x 1)

# 1.7 MOTORS

## 1.7.1 TRAY LIFT MOTOR

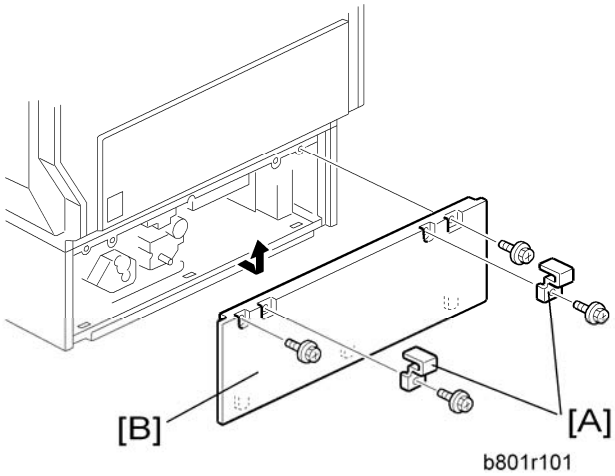


1. Securing brackets [A] (🔩 x 1 each)
2. Rear cover [B] (🔩 x 2)

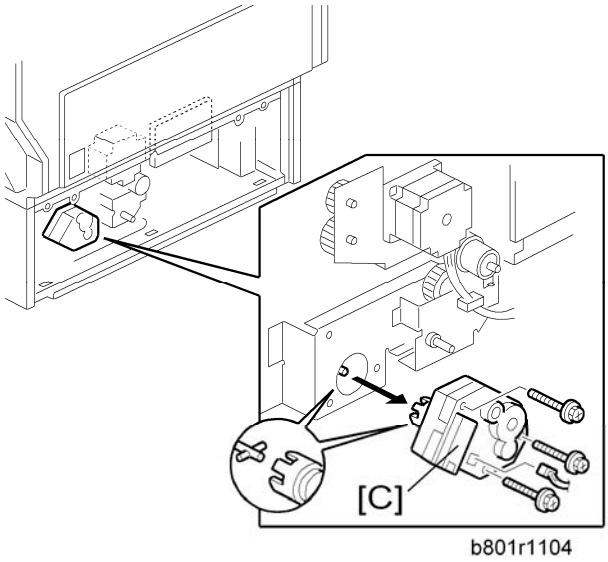


3. Tray lift motor [C] (🔌 x 1, 🔩 x 3)

## 1.7.2 TRAY MOTOR

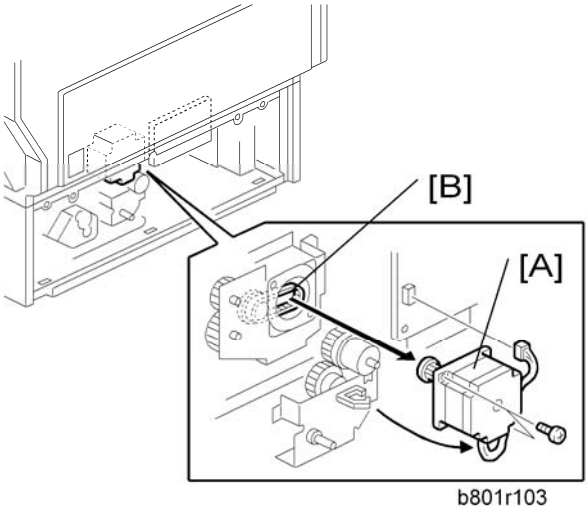


1. Rear cover (☛ "Tray Lift Motor")
2. Tray motor [A] (✋ x 1, 🔩 x 2)

Note

- When installing the tray motor, make sure that the gear of the tray motor holds the timing belt [B].

# 1.8 PICK-UP, FEED AND SEPARATION ROLLERS

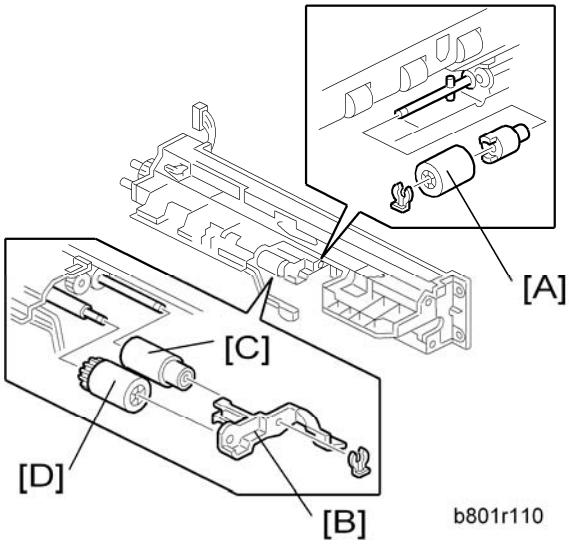


1. Paper feed unit (☛ "Paper Feed Unit")
2. Separation roller [A] (⚙ x 1)
3. Roller holder [B] (⚙ x 1)
4. Feed roller [C] and pick-up roller [D]

# 1.9 PAPER FEED, PAPER END, LIFT AND RELAY SENSORS

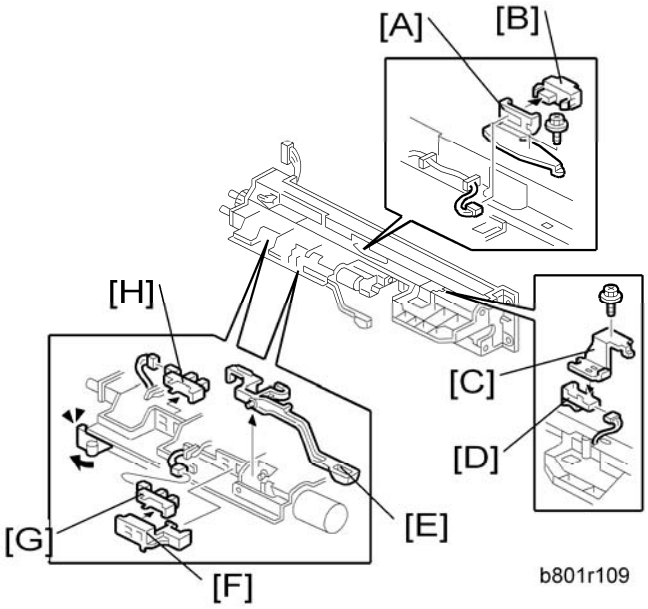


1. Paper feed unit (☛ "Paper Feed Unit")
2. Vertical transport sensor bracket [A] (🔩 x 1, ✋ x 1)
3. Relay sensor [B]
4. Paper feed sensor bracket [C]
5. Paper feed sensor [D]
6. Paper end feeler [E]
7. Paper end sensor holder [F] (hook x 3)
8. Paper end sensor [G] (✋ x 1, hook x 3)
9. Lift sensor [H] (✋ x 1, hook x 3)

# 1.10 PAPER FEED

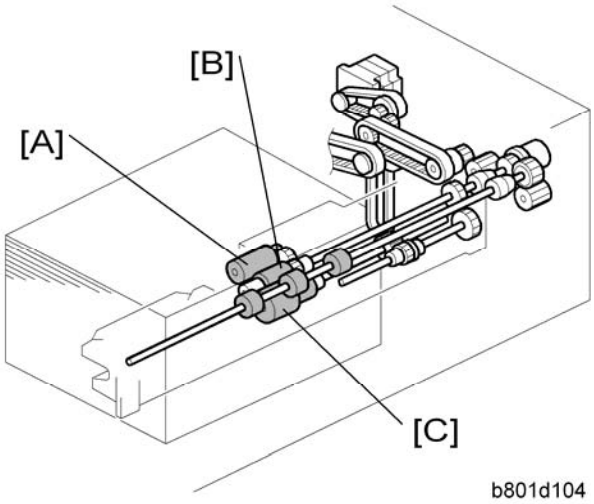


This products uses an FRR type paper feed mechanism.

The paper feed unit consists of the pick-up roller [A], paper feed roller [B], separation roller [C], and relay rollers.

There is a torque limiter in the back of the separation roller (ferrite powder type).

# 2. DETAILS

## 2.1 COMPONENT LAYOUT

### 2.1.1 MECHANICAL COMPONENT LAYOUT

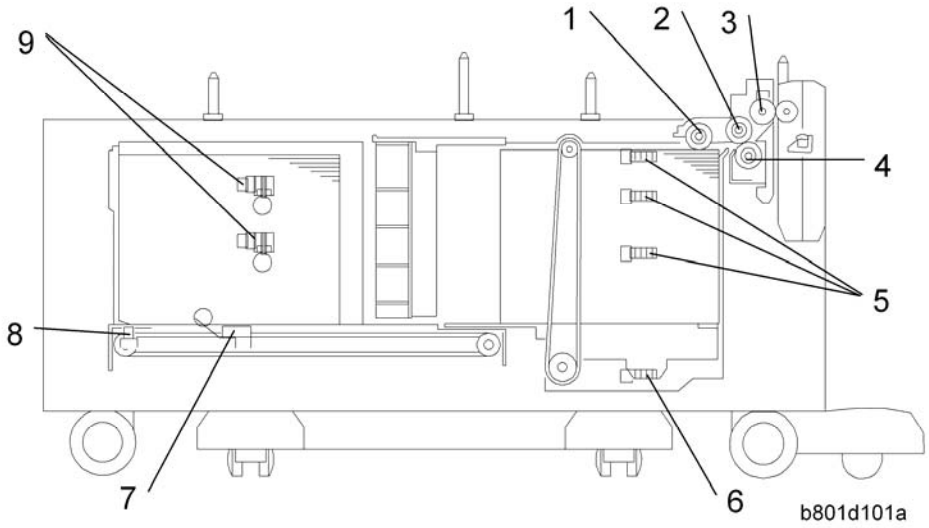


| | |
|---|---|
| 1. Pick-up Roller<br>2. Paper Feed Roller<br>3. Relay Sensor<br>4. Separation Roller<br>5. Paper Height Sensors 1, 2, 3 | 6. Lower Limit Sensor<br>7. Paper End Sensor 2<br>8. End Fence HP Sensor<br>9. Paper Height Sensors 4, 5 |

## 2.1.2 ELECTRICAL COMPONENT LAYOUT

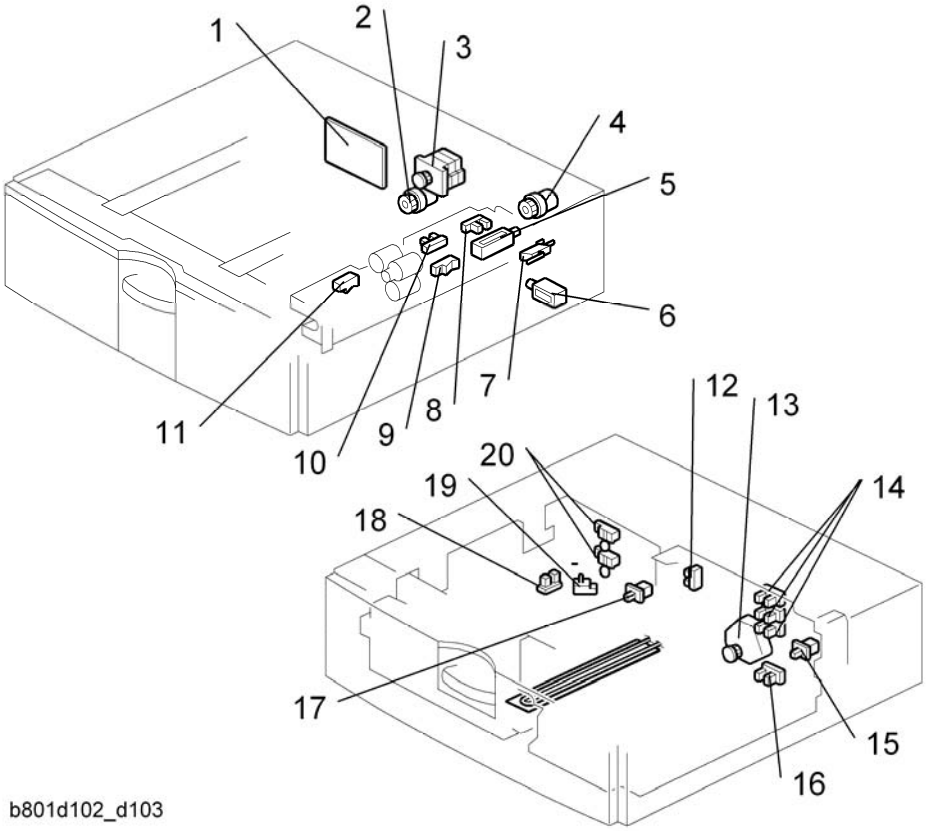


| | |
|---|---|
| 1. Main board | 11. Paper feed sensors |
| 2. Stack transport clutch | 12. Side fence sensor |
| 3. Tray motor | 13. Tray lift motor |
| 4. Paper feed clutch | 14. Paper height sensor 1, 2, 3 |
| 5. Pick-up solenoid | 15. Tray set switch |
| 6. Right tray lock solenoid | 16. Lower limit sensor |
| 7. Vertical guide switch | 17. Left tray set switch |
| 8. Lift sensor | 18. End fence HP sensor |
| 9. Relay sensor | 19. Paper end sensor 2 |
| 10. Paper end sensor 1 | 20 Paper height sensors 4, 5 |

## 2.1.3 ELECTRICAL COMPONENT DESCRIPTIONS

| Symbol | Name | Function | Index No. |
|---|---|---|---|
| **Motors** | | | |
| M1 | Tray | Drives all rollers. | 3 |
| M2 | Tray Lift | Drives the paper tray up or down. | 13 |
| **Sensors** | | | |
| S1 | Paper Feed Sensor | Detects whether the paper is jammed at LCT. | 11 |
| S2 | Relay | Detects the copy paper coming to the relay roller and checks for misfeeds. | 9 |
| S3 | Paper End 1 (paper feed side) | Informs the copier/printer when the paper in the right side (paper feed side) of the tray has been used up. If there is a paper stack in the left side (paper storage side), this is moved into the paper feed side. If there is no paper stack in the left side, paper end is indicated. | 10 |
| S4 | Lift | Detects when the paper is at the correct paper feed height. | 8 |
| S5-S7 | Paper Height 1, 2, 3 | Detects the amount of paper remaining in the right side of the tray. | 14 |
| S8 | Lower Limit | Detects when the tray is completely lowered, to stop the LCT motor. | 16 |
| S9 | End Fence HP | Detects when the left fence is at its home position | 18 |
| S10 | Side Fence | Detects whether the side fence is open or closed. (The fence opens when the | 12 |

| Symbol | Name | Function | Index No. |
|---|---|---|---|
| | | left-tray paper stack is moving to the paper feed side.) | |
| S11 | Paper End 2 (paper storage side) | Informs the copier/printer when there is no paper in the left side (paper storage side) of the tray. | 19 |
| S12<br>S13 | Paper Height 4, 5 | Detects the amount of paper remaining in the left side of the tray. | 20 |
| **Switches** | | | |
| SW1 | Vertical Guide | Detects whether the right cover is open. | 7 |
| SW2 | Tray Set Switch | Detects whether the tray is correctly set. | 15 |
| SW3 | Left Tray Set Switch | Detects whether the left tray is correctly set. | 17 |
| **Magnetic Clutches** | | | |
| MC1 | Paper Feed | Drives the paper feed roller. | 4 |
| MC2 | Stack Transport | Drives the rear fence of the paper storage side. | 2 |
| **Solenoids** | | | |
| SOL1 | Pick-up | Pushes the pick-up roller up or down. | 5 |
| SOL2 | Tray Lock | Locks or unlocks the right tray. | 6 |
| **PCBs** | | | |
| PCB1 | Main | Controls the LCT and communicates with the copier/printer. | 1 |

## 2.2 SEPARATION ROLLER AND PICK-UP ROLLER RELEASE

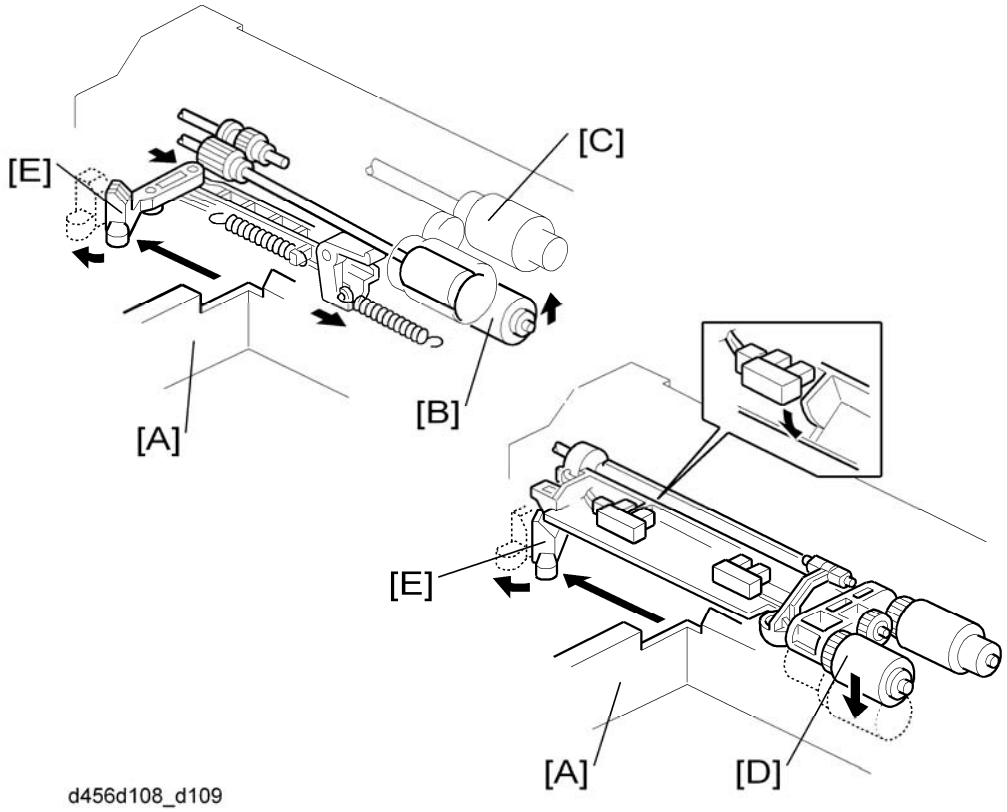


To prevent the paper from being torn when pulling out the paper feed tray, the separation and pick-up rollers release automatically.

When the paper tray [A] is not inside the machine, the separation roller [B] is away from the paper feed roller [C], and the pick-up roller [D] stays in the upper position.

When the paper tray is set into the machine, it pushes the release lever [E]. This causes the pick-up roller [D] to go down into contact with the top sheet of paper and the separation roller [B] to move up and contact the paper feed roller.

## 2.3 TRAY LIFT

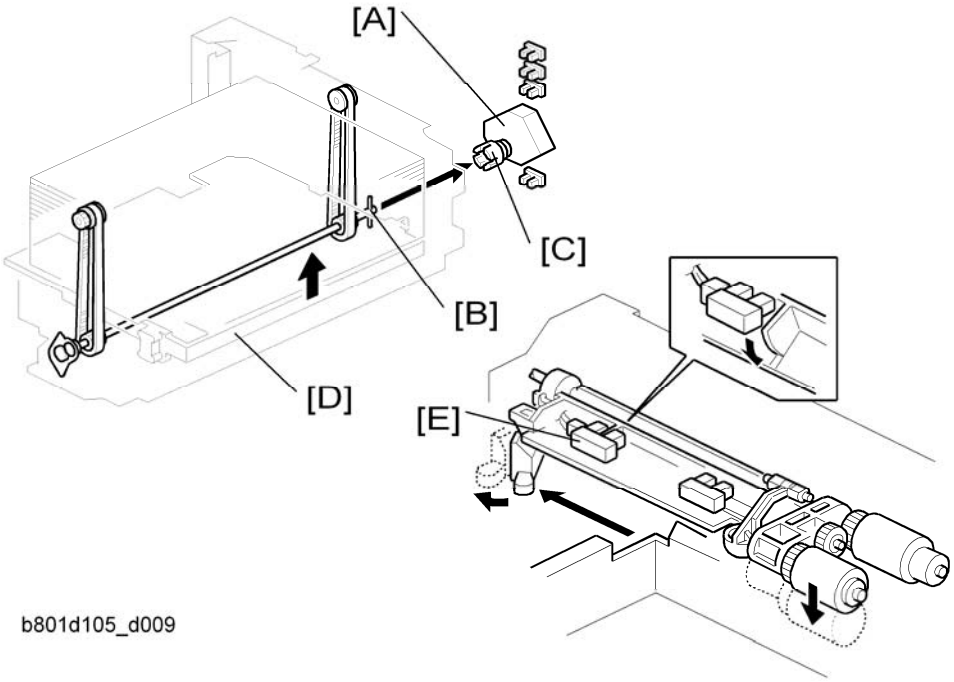


When the paper feed tray is put in the machine, the tray switch on the back turns on and the tray lift motor [A] starts. The base plate lift shaft [B] is coupled to the lift motor at the shaft [C], so the base plate [D] of the tray is lifted. After a short while, the top of the paper stack contacts the pick-up roller and lifts it up. Then the motor stops lifting the plate when the upper limit sensor actuator enters the sensor (☞ "Electrical Component Layout").
When paper in the tray is used up, the pick-up roller is gradually lowered, and the actuator leaves the lift sensor [E]. When this happens, the lift motor begins turning again. The tray will then be lifted until the actuator enters the upper limit sensor again).
When the tray is removed from the copier, the coupling between the lift motor [A] and base plate lift shaft [B] is broken and the base plate goes into a controlled free fall (using a damper to slow the fall and prevent damage).

## 2.4 PAPER AMOUNT DETECTION

The table lists the sensors that are used to detect the amount of remaining paper.

Right Tray (Paper feed side)

- Paper end sensor 1
- Paper height sensor 1 to 3

Left Tray (Paper storage side)

- Paper height sensor 4 and 5
- Paper end sensor 2

**Right Tray**

| Amount of paper | Paper Height Sensor | | | Paper End Sensor | Display No. of Line |
|---|---|---|---|---|---|
| | 1 | 2 | 3 | | |
| 100% | OFF | OFF | OFF | ON | 4 |
| 70% | OFF | OFF | ON | ON | 3 |
| 30% | OFF | ON | - | ON | 2 |
| 10% | ON | - | - | ON | 1 |
| Paper End | - | - | - | OFF | 0 |

**Left Tray**

| Amount of paper | Paper Height Sensor | | Paper End Sensor | Display No. of Line |
|---|---|---|---|---|
| | 4 | 5 | | |
| 100% | OFF | OFF | OFF | 4 |
| 70% | ON | OFF | OFF | 3 |
| 30% | ON | ON | OFF | 2 |
| Paper End | ON | ON | ON | 0 |

## 2.5 PAPER END DETECTION (PAPER FEED SIDE)

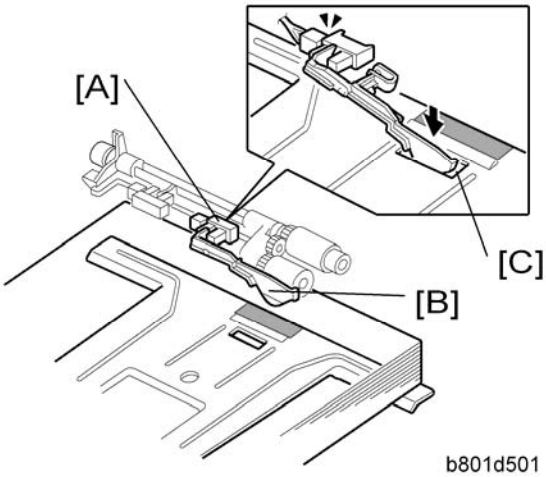


The paper end sensor 1 [A] detects when copy paper in the paper feed side runs out. When there is paper in the tray, the paper pushes up the feeler [B] and the actuator enters the sensor. When paper runs out, the feeler drops in to cutout [C] and the actuator leaves the sensor, and the machine detects that there is no paper in the tray.

## 2.6 PAPER STACK TRANSPORT

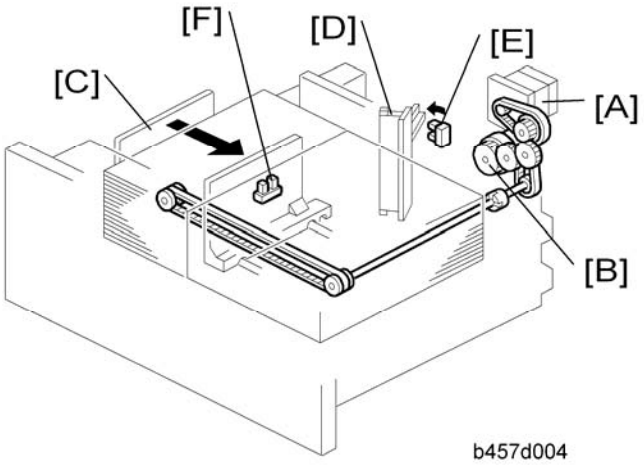


When the paper in the paper feed side is used up, the tray motor [A] and stack transport clutch [B] turn on. Then the end fence [C] moves the stack of paper from the paper storage side to the paper feed side.

Note

- During paper feed, the stack transport clutch (☞ "Electrical Component Layout") does not switch on, so drive from the tray motor only transfers to the relay roller and not to the fence mechanism.

While the stack is in motion, it pushes the side fence [D] aside, and the side fence sensor [E] detects that the fence is open.

After the stack has been moved all the way across, a spring in the side fence moves the side fence back, and the side fence sensor detects that the fence is closed. Then, the tray motor reverses until end fence home position sensor [F] is deactivated.

# 1200-SHEET LCIT RT3000

# D353

| D353 LCIT RT3000 | | |
|---|---|---|
| **Page** | **Date** | **Added/Updated/New** |
| | | None |

# 1200-SHEET LCIT RT3000(D353)

## TABLE OF CONTENTS


**1. REPLACEMENT AND ADJUSTMENT ..... 1**

1.1 COVERS ..... 1

1.1.1 REAR COVER ..... 1

1.1.2 RIGHT DOOR ..... 1

1.1.3 FRONT AND TOP COVERS ..... 2

1.2 PAPER FEED ..... 3

1.2.1 PICK-UP, PAPER FEED AND SEPARATION ROLLERS ..... 3

1.3 DRIVE ..... 4

1.3.1 PAPER FEED CLUTCH ..... 4

1.3.2 PAPER FEED MOTOR ..... 4

1.3.3 TRAY LIFT MOTOR ..... 5

1.4 ELECTRICAL COMPONENTS ..... 6

1.4.1 MAIN BOARD ..... 6

1.4.2 LCT SET SWITCHES ..... 6

1.4.3 DOWN SWITCH ..... 7

1.4.4 PAPER FEED, PAPER END, TRAY LIFT AND RELAY SENSORS ..... 7

1.4.5 STACK SENSOR ..... 9

1.5 SIDE FENCE POSITION CHANGE ..... 10

**2. DETAILS ..... 11**

2.1 COMPONENT LAYOUT ..... 11

2.1.1 COMPONENT LAYOUT ..... 11

2.1.2 ELECTRICAL COMPONENT LAYOUT ..... 12

2.1.3 ELECTRICAL COMPONENT DESCRIPTIONS ..... 12

2.1.4 DRIVE LAYOUT ..... 15

2.2 PAPER FEED ..... 16

2.2.1 PAPER FEED MECHANISM ..... 16

2.2.2 TRAY LIFT MECHANISM ..... 17

2.2.3 PAPER HEIGHT AND END DETECTION ..... 18

# Read This First

## Safety and Symbols

### Replacement Procedure Safety

**⚠CAUTION**

- Turn off the main power switch and unplug the machine before beginning any of the replacement procedures in this manual.

Symbols Used in this Manual

This manual uses the following symbols.

☛: See or Refer to

: Screws

: Connector

: Clip ring

: E-ring

: Clamp

# 1. REPLACEMENT AND ADJUSTMENT

## 1.1 COVERS

### 1.1.1 REAR COVER

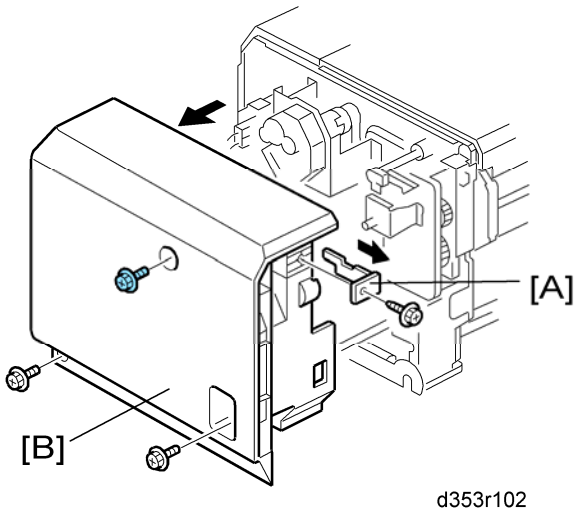


1. Cover [A] (x 1)
2. Rear cover [B] (x 3)

### 1.1.2 RIGHT DOOR

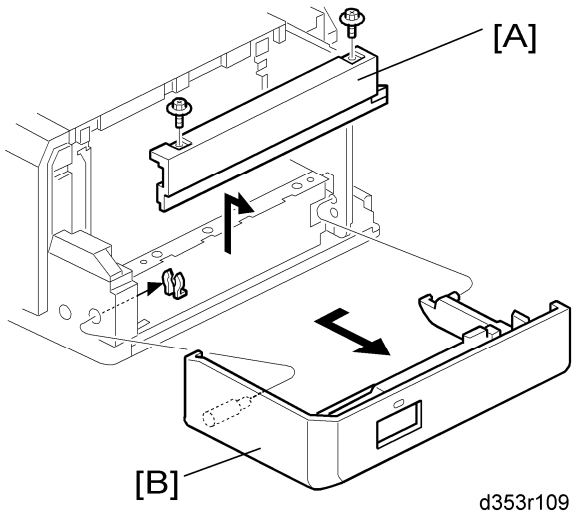


1. Right lower cover [A] (x 2)
2. Right door [B] (x 1)

## 1.1.3 FRONT AND TOP COVERS

1. Right door (☛ p.1 "Rear Cover")

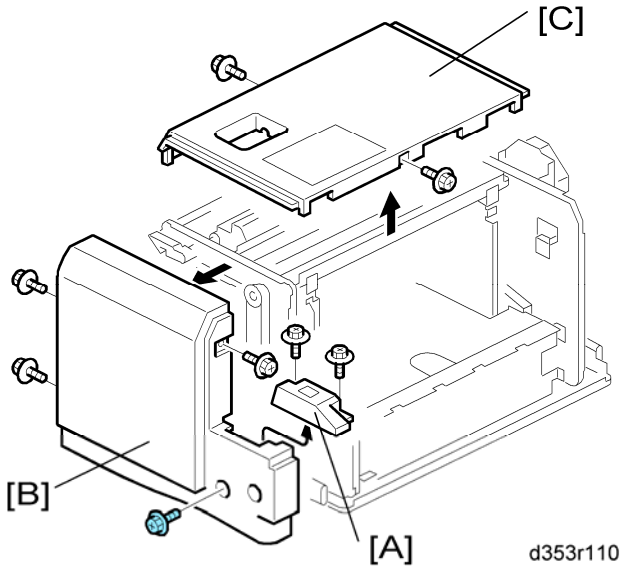


2. Switch cover [A] (🖉 x 2)
3. Front cover [B] (🖉 x 4)
4. Top cover [C] (🖉 x 2)

# 1.2 PAPER FEED

## 1.2.1 PICK-UP, PAPER FEED AND SEPARATION ROLLERS

1. Open the right door.

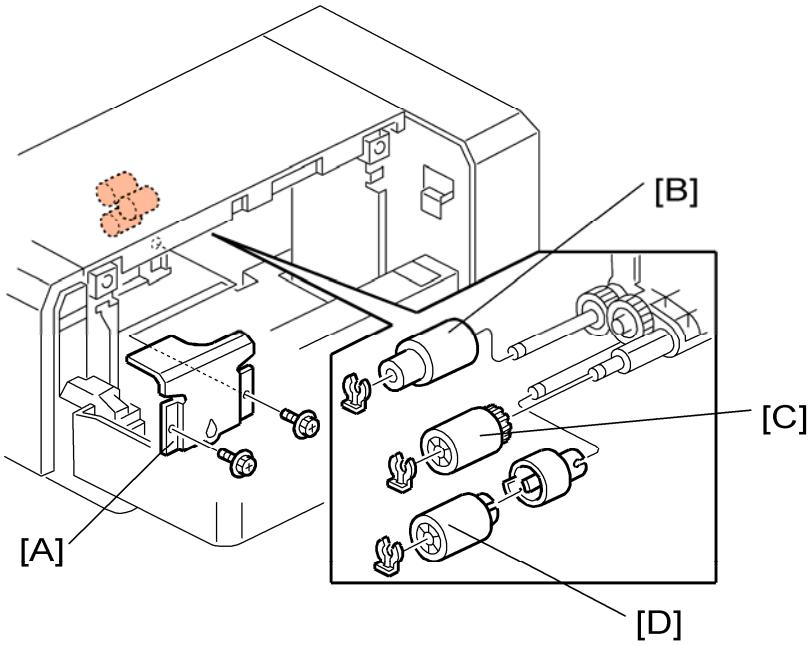


d353r101

2. Sensor bracket [A] (x 2)
3. Rollers [B], [C], [D] (x 1 each)

   [B]: Paper feed roller

   [C]: Pick-up roller

   [D]: Separation roller

# 1.3 DRIVE

## 1.3.1 PAPER FEED CLUTCH

1. Rear cover (☞ p.1 "Rear Cover")

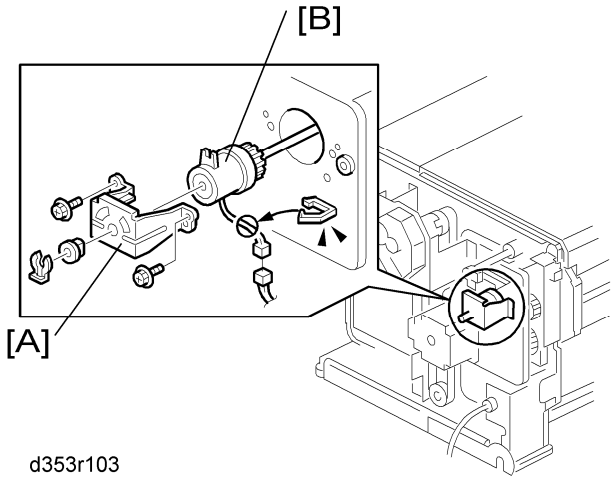


2. Bracket [A] (x 1, x 2, bushing x 1)
3. Paper feed clutch [B] (x 1, x 1)

## 1.3.2 PAPER FEED MOTOR

1. Rear cover (☞ p.1 "Rear Cover")

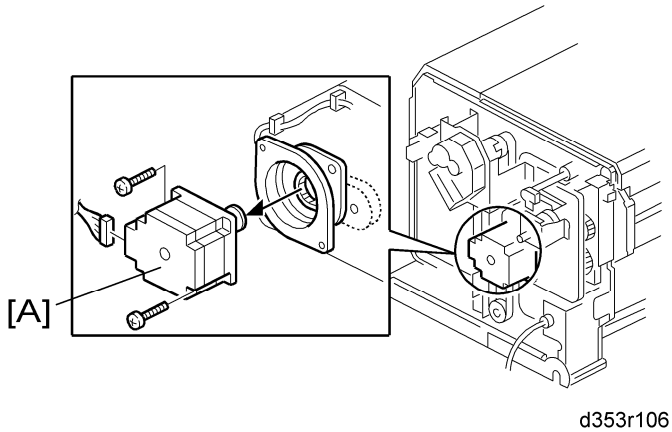


1. Paper feed motor [A] (x 2)

## 1.3.3 TRAY LIFT MOTOR

1. Rear cover (☞ p.1 "Rear Cover")

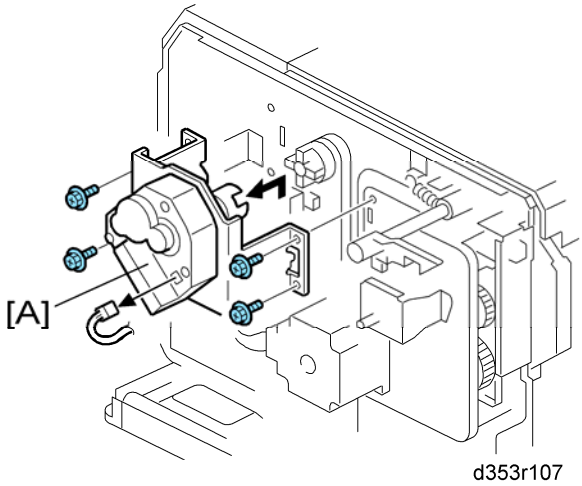


2. Tray lift motor unit [A] (🔩 x 4, ✋ x 1)

# 1.4 ELECTRICAL COMPONENTS

## 1.4.1 MAIN BOARD

1. Rear cover (☞ p.1 "Rear Cover")

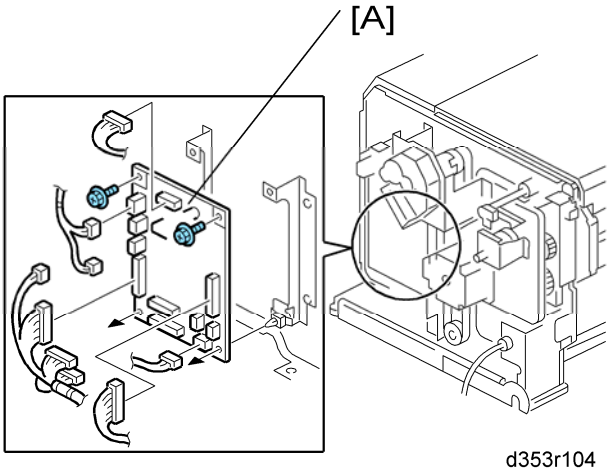


2. Main board (🔩 x 2, all 🔩's)

## 1.4.2 LCT SET SWITCHES

### *Rear*

1. Rear cover (☞ p.1 "Rear Cover")

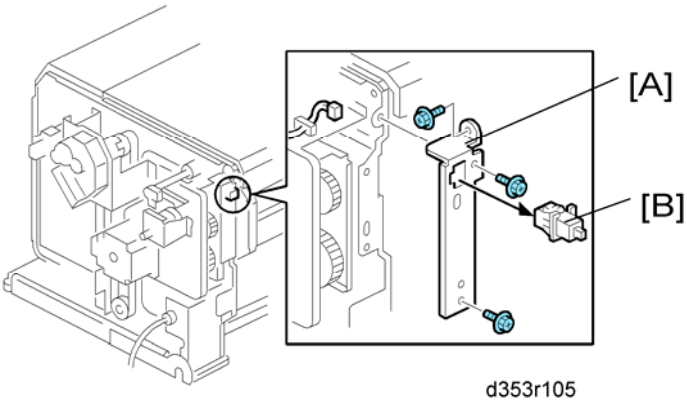


2. Switch bracket [A] (🔩 x 3)
3. Rear LCT set switch [B]

### *Front*

1. Front cover (☞ p.2 "Front and Top Covers")

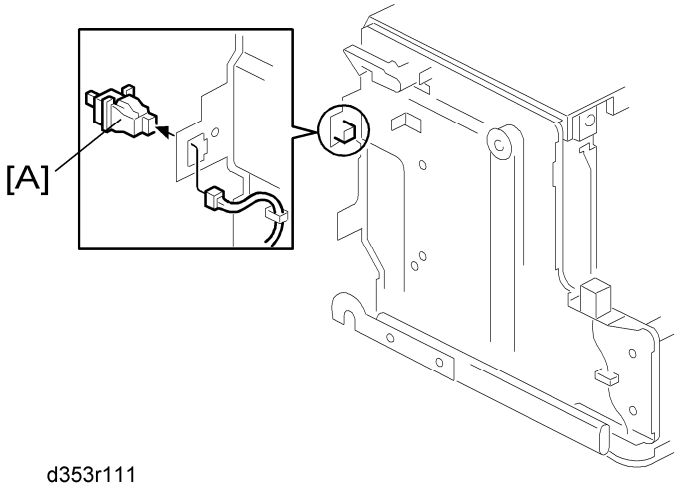


2. Front LCT set switch [A] (☞ x 1)

## 1.4.3 DOWN SWITCH

1. Front cover (☛ p.2 "Front and Top Covers")

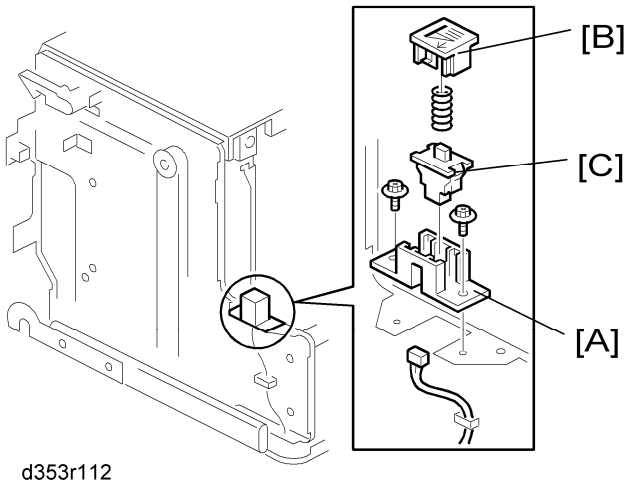


2. Switch base [A] (☞ x 2, ☞ x 1)
3. Down button [B] (spring x 1)
4. Down switch [C] (hook)

## 1.4.4 PAPER FEED, PAPER END, TRAY LIFT AND RELAY SENSORS

1. Front cover (☛ p.2 "Front and Top Covers")
2. Top Cover (☛ Front and Top Covers)

Electrical Components

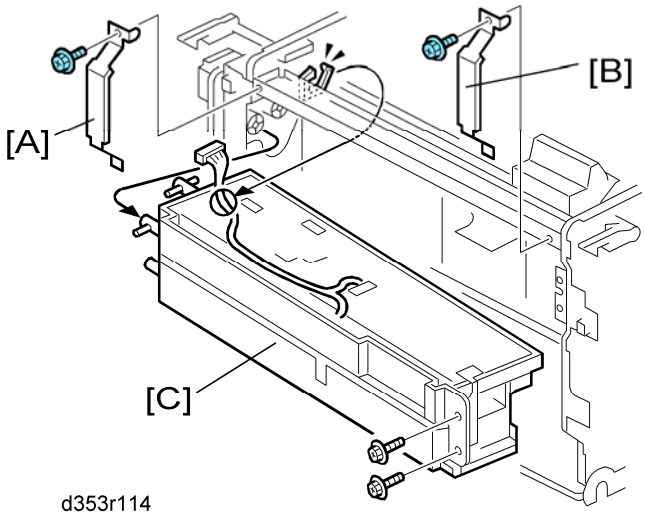


3. Rear ground plate [A] (x 1)
4. Front ground plate [B] (x 1)
5. Paper feed unit [C] (x 2, x 1, x 1)

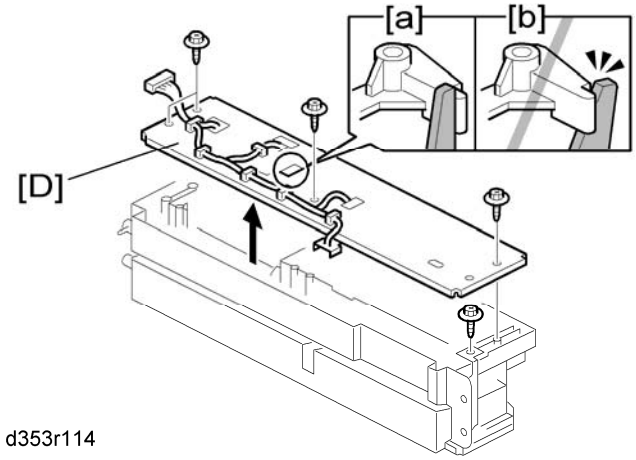


6. Paper feed unit cover [D] (x 5, x 1)

Note

- Before you re-install the paper feed unit cover, make sure that the pick-up solenoid holds the pick-up roller lever ([a]: correct, [b]: incorrect) and the pick-up roller works properly.

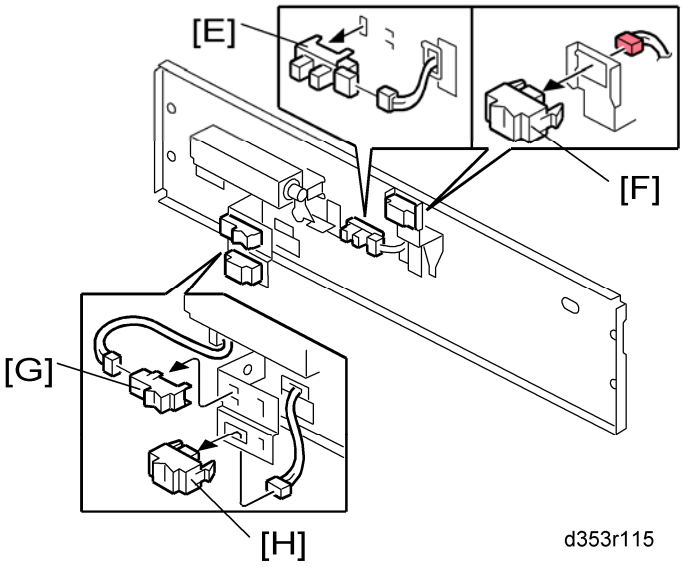


7. Sensors [E], [F], [G], [H] (☞ x 1, hooks each)
   [E]: Tray lift sensor
   [F]: Relay sensor
   [G]: Paper feed sensor
   [H]: Paper end sensor

## 1.4.5 STACK SENSOR

1. Open the right door
2. Paper feed unit (☛ p.7 "Paper Feed, Paper End, Tray Lift and Relay Sensors")

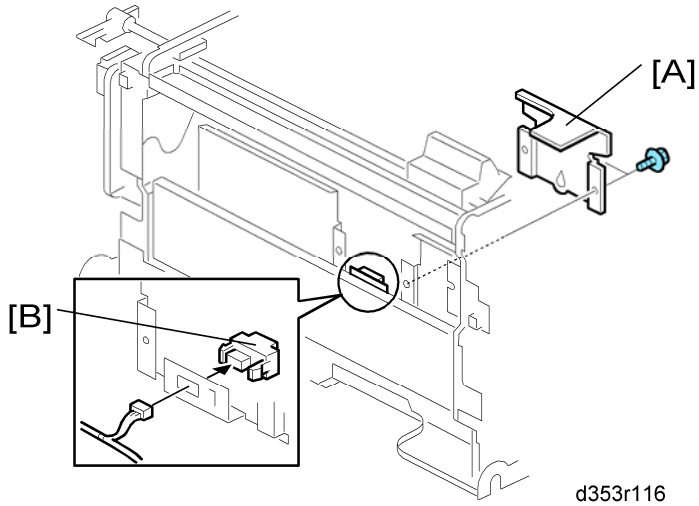


3. Sensor bracket [A] (☞ x 2)
4. Stack sensor [B] (☞ x 1)

## 1.5 SIDE FENCE POSITION CHANGE

1. Open the right door of the LCT.
2. Push the down switch to lower the tray bottom plate until it reaches its lowest position.

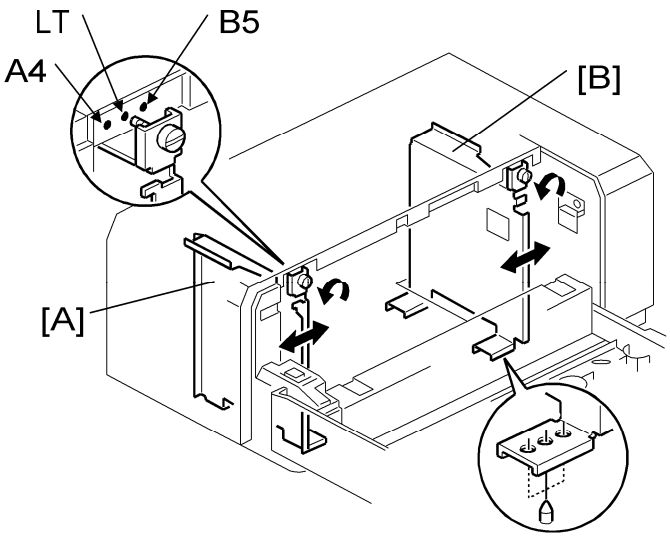


d353i106

3. Remove the front and rear side fences [A, B] (🔩 x 1 each).
4. Install the side fences in the correct position (A4 LEF/ LT LEF/ B5 LEF).

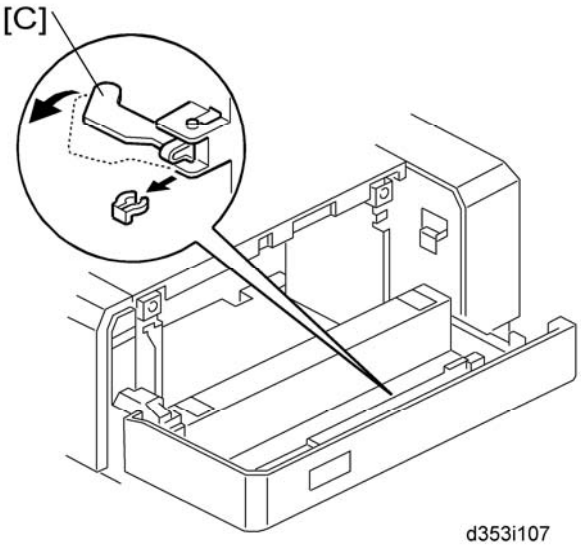


d353i107

5. Pull the end fence [C] for B5 size paper as shown (🗜 x 1) if the the side fences are adjusted for B5 size paper.
6. Close the right door.
7. Turn on the main power switch, and then go into the SP mode.
8. Input the correct paper size for the1200-sheet LCT with SP5181-017.

# 2. DETAILS

## 2.1 COMPONENT LAYOUT

### 2.1.1 COMPONENT LAYOUT

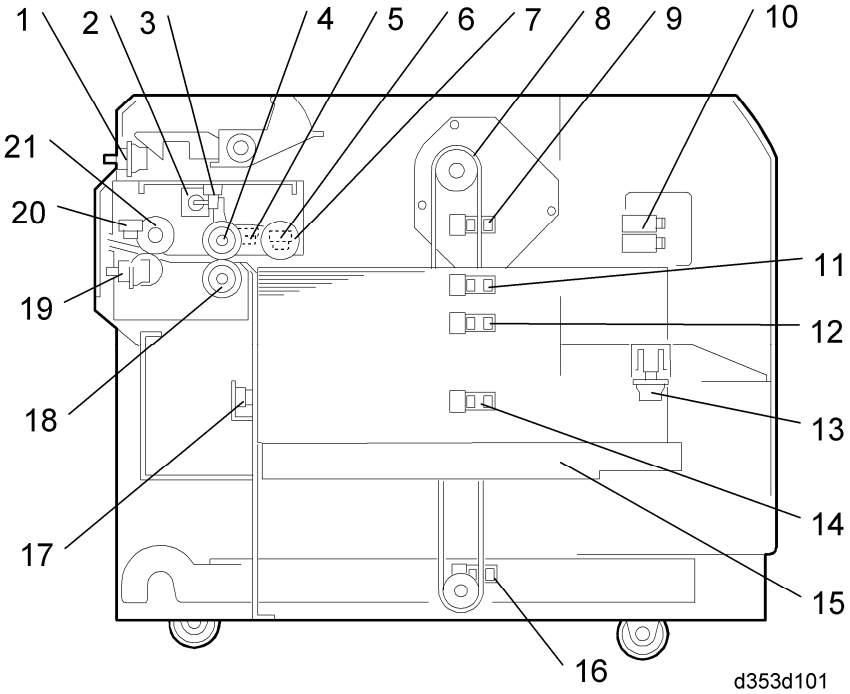


| | |
|---|---|
| 1. Rear LCT Set Switch<br>2. Pick-up Roller Solenoid<br>3. Tray Lift Sensor<br>4. Paper Feed Roller<br>5. Paper Feed Sensor<br>6. Paper End Sensor<br>7. Pick-up Roller<br>8. Tray Lift Motor<br>9. Paper Height Sensor 1<br>10. Interlock Switches<br>11. Paper Height Sensor 2 | 12. Sub Paper Height Sensor<br>13. Tray Down Switch<br>14. Paper Height Sensor 3<br>15. Paper Tray<br>16. Lower Limit Sensor<br>17. Stack Sensor<br>18. Separation Roller<br>19. Front LCT Set Switch<br>20. Relay Sensor 5<br>21. Relay Roller |

## 2.1.2 ELECTRICAL COMPONENT LAYOUT

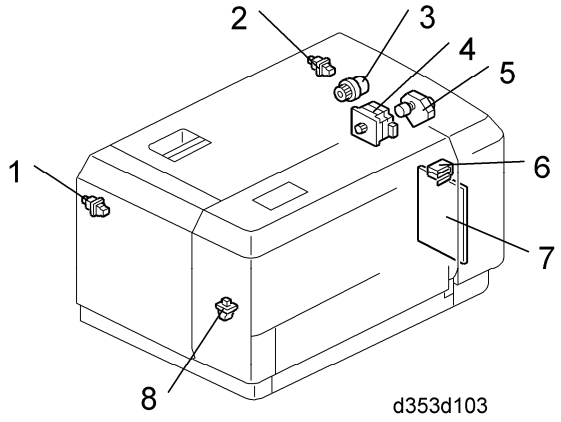


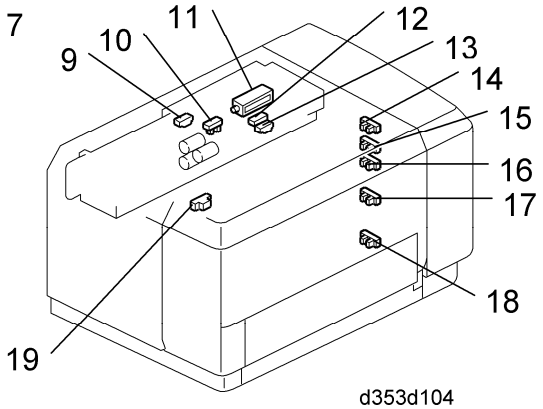


| | |
|---|---|
| 1. Front LCT Set Switch<br>2. Rear LCT Set Switch<br>3. Paper Feed Clutch<br>4. Paper Feed Motor<br>5. Tray Lift Motor<br>6. Interlock Switches<br>7. Main Board<br>8. Tray Down Switch<br>9. Relay Sensor<br>10. Tray Lift Sensor | 11. Pick-up Roller Solenoid<br>12. Paper Feed Sensor<br>13. Paper End Sensor<br>14. Paper Height Sensor 1<br>15. Paper Height Sensor 2<br>16. Sub Paper Height Sensor<br>17. Paper Height Sensor 3<br>18. Lower Limit Sensor<br>19. Stack Sensor |

## 2.1.3 ELECTRICAL COMPONENT DESCRIPTIONS

| Symbol | Name | Function | Index No. |
|---|---|---|---|
| **Motors** | | | |
| M1 | Paper Feed | Drives all rollers. | 4 |

| Symbol | Name | Function | Index No. |
|---|---|---|---|
| M2 | Tray Lift | Drives the paper tray up or down. | 5 |
| **Sensors** | | | |
| S1 | Paper Feed | Detects whether the paper is jammed at the LCT. | 12 |
| S2 | Relay | Detects the copy paper coming to the relay roller and checks for misfeeds. | 9 |
| S3 | Paper End | Informs the mainframe when the paper in the tray has been used up and indicates paper end. | 13 |
| S4 | Tray Lift | Detects when the paper is at the correct paper feed height. | 10 |
| S5 | Paper Height 1 | Detects the amount of paper remaining in the tray. | 14 |
| S6 | Paper Height 2 | | 15 |
| S7 | Sub Paper Height | | 16 |
| S8 | Paper Height 3 | | 17 |
| S9 | Lower Limit | Detects when the tray is completely lowered, to stop the tray lift motor. | 18 |
| S10 | Stack | Detects a) when the tray has moved down to the paper supply position after paper end, to stop the tray lift motor or b) when the top of the paper stack has moved down to the paper supply position, to stop the tray lift motor after the down switch has been pressed. | 19 |
| | | | |

Component Layout

| Symbol | Name | Function | Index No. |
|---|---|---|---|
| **Switches** | | | |
| SW1 | Right Door | Detects whether the right door is open and starts to drive the tray lift motor. | 6 |
| SW2 | Front LCT Set | Detects whether the LCT is correctly set. | 1 |
| SW3 | Rear LCT Set | Detects whether the LCT is correctly set. | 2 |
| SW4 | Down | Lowers the tray to the paper supply position if pressed. | 8 |
| **Magnetic Clutches** | | | |
| MC1 | Paper Feed | Drives the paper feed unit. | 3 |
| | | | |
| **Solenoids** | | | |
| SOL1 | Pick-up | Pushes the pick-up roller up or down. | 11 |
| | | | |
| **PCBs** | | | |
| PCB1 | Main | Controls the LCT and communicates with the copier/printer. | 7 |

## 2.1.4 DRIVE LAYOUT

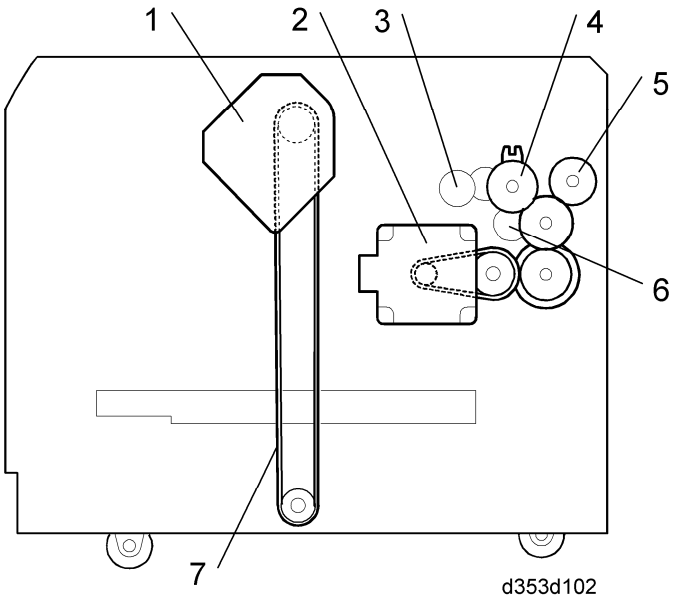


| | |
|---|---|
| 1. Tray Lift Motor<br>2. Paper Feed Motor<br>3. Pick-up Roller<br>4. Paper Feed Clutch | 5. Relay Roller<br>6. Separation Roller<br>7. Tray Drive Belt |

# 2.2 PAPER FEED

## 2.2.1 PAPER FEED MECHANISM

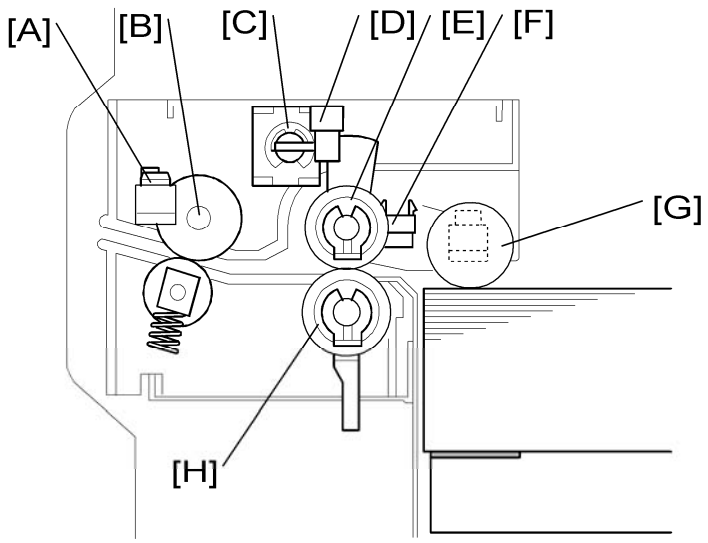


d353d105

This machine uses the FRR paper feed system (paper feed roller [E], separation roller [H], pick-up roller [G]).

When the right door is closed, the tray lift motor raises the tray to the position where the top of the paper stack in the tray interrupts the tray lift sensor [D]. The paper feed motor switches on, then the pick-up solenoid [C] switches off and the pick-up roller drops onto the top of the stack of paper. The paper feed clutch transfers drive to the paper feed roller [E], pick-up roller [G] and separation roller [H].

The rotating pick-up roller lowers and feeds the first sheet when it contacts the top of the stack.

The separation roller [H], in contact with the feed roller, only allows one sheet out of the tray.

As soon as the paper feed sensor [F] detects the leading edge of the paper, it switches off the pick-up solenoid which raises the pick-up roller. The feed roller feeds the sheet to the registration roller in the main machine through the relay roller [B].

This process is repeated for each sheet.

The paper feed sensor [F] detects "JAM7" and the relay sensor [A] detects "JAM58".

## 2.2.2 TRAY LIFT MECHANISM

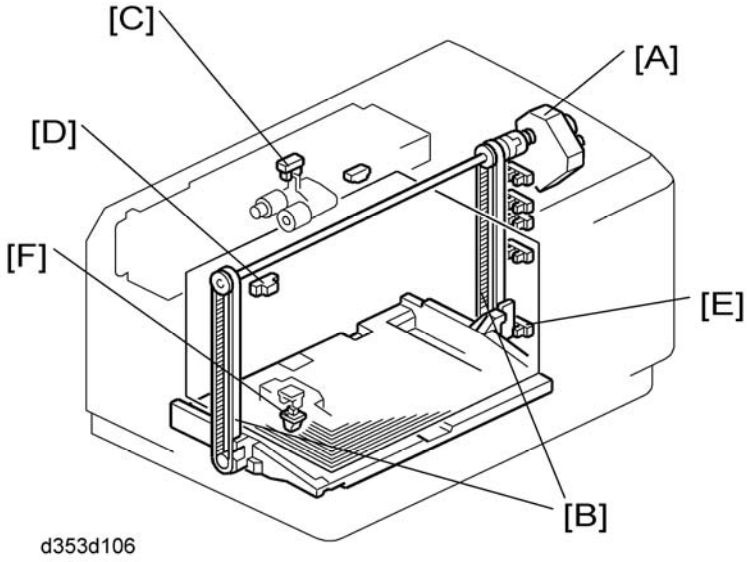


The lift motor [A] controls the vertical position of the tray through the timing belts [B].

### *Tray lifting conditions*

When the tray lift sensor [C] turns off in the following conditions, the tray lift motor raises the tray bottom plate until the tray lift sensor [C] turns on again.

- Just after the main switch is turned on
- During copying
- Just after the tray cover is closed
- Just after leaving the energy saving mode

### *Tray lowering conditions (Paper supply position)*

In the following conditions, the tray lift motor lowers the tray until the stack sensor [D] turns on (this is the correct tray position for supplying paper).

- Just after the paper end sensor turns on
- Just after the down switch is pressed by the user

### *Tray lowering conditions (Full-down position)*

In the following condition, the tray lift motor lowers the tray until the lower limit sensor [E] turns on (this is the correct tray position for adding 500 sheets of paper after installing the first stack of paper in the LCT tray).

- Just after the down switch [F] is pressed for 3 seconds or more when the tray is at the paper supply position.

## 2.2.3 PAPER HEIGHT AND END DETECTION

### *Paper Height*

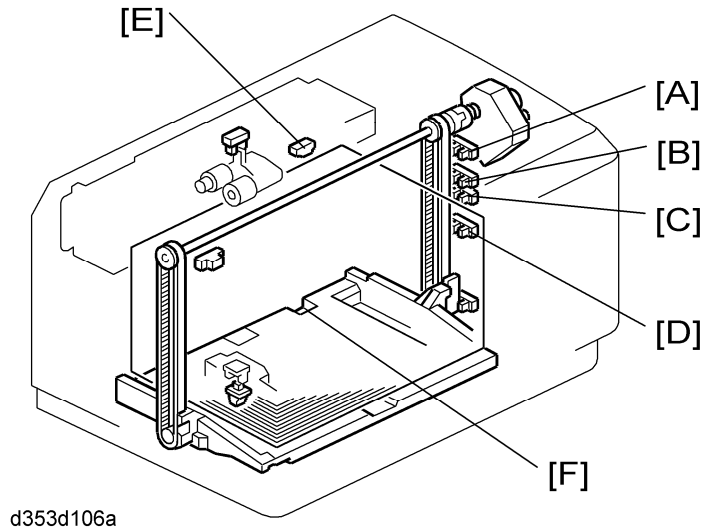


The amount of the paper in the tray is detected by combination of high (1)/low (0) outputs from three sensors (paper height sensor 1 [A], 2 [B], 3 [D] and sub paper height sensor [C]).

| Amount of paper | PH S-1 | PH S-2 | PH S-3 | Sub PH S | Indicator on the operation panel |
|---|---|---|---|---|---|
| 100% | 0 | 0 | 0 | 0 | Four lines |
| 70% | 0 | 0 | 1 | - | Three lines |
| | 0 | 0 | 0 | 1 | |
| 30% | 0 | 1 | - | - | Two lines |
| 10% | 1 | - | - | - | One line |
| End | - | - | - | - | No line |

0: No interruption (low), 1: Interruption (high), -: No checking

PH S: Paper Height Sensor

### *Paper End*

The paper end sensor [E] monitors the light reflected by each sheet on top of the stack.

When the last sheet feeds, the cutout [F] is exposed, and the paper end sensor receives no reflected light from below because there is no paper. As a result, this signals paper end.

# 500-SHEET FINISHER SR3050

# D372

| 500-SHEET FINISHER SR3050 REVISION HISTORY | | |
|---|---|---|
| **Page** | **Date** | **Added/Updated/New** |
| | | None |

# 500-SHEET FINISHER SR3050 D372

## TABLE OF CONTENTS


**1. REPLACEMENT AND ADJUSTMENT ..... 1**

1.1 COMMON PROCEDURES .....1

1.1.1 DISCONNECTING, REMOVING THE FINISHER.....1

1.1.2 FRONT COVER.....2

1.1.3 REAR COVER .....2

1.1.4 TRANSPORT UNIT .....3

1.2 SENSORS .....6

1.2.1 ENTRANCE SENSOR .....6

1.2.2 PAPER SENSOR.....6

1.3 MOTORS .....8

1.3.1 TRAY LIFT MOTOR.....8

1.3.2 TRANSPORT MOTOR .....8

1.3.3 POSITIONING ROLLER ARM MOTOR.....9

1.3.4 STAPLER MOVEMENT MOTOR .....10

1.3.5 FRONT FENCE MOTOR.....11

1.3.6 FEED-OUT BELT MOTOR, REAR FENCE MOTOR.....11

1.4 BOARDS.....13

1.4.1 MAIN BOARD .....13

1.5 OTHERS.....14

1.5.1 STAPLER .....14

1.5.2 POSITIONING ROLLER.....14

**2. DETAILED SECTION DESCRIPTIONS ..... 16**

2.1 OVERVIEW.....16

2.1.1 IMPORTANT PARTS.....16

2.1.2 EXTERNAL DIMENSIONS .....17

2.1.3 GENERAL OPERATION.....17

2.1.4 INITIALIZATION: WHAT HAPPENS AT POWER ON.....19

2.2 PAPER TRANSPORT.....21

2.2.1 OVERVIEW .....21

2.2.2 TRANSPORT ROLLERS .....22

2.2.3 POSITIONING ROLLER ..... 23
2.2.4 POSITIONING ROLLER INITIALIZATION ..... 25
2.3 JOGGING (PAPER ALIGNMENT) ..... 26
2.3.1 OVERVIEW ..... 26
2.3.2 SIDE FENCE OPERATION ..... 27
2.3.3 SIDE FENCE INITIALIZATION ..... 30
2.3.4 SIDE FENCE MOTOR ERRORS ..... 30
2.3.5 SIDE FENCE OPERATION ADJUSTMENT ..... 31
2.4 STAPLING ..... 33
2.4.1 OVERVIEW ..... 33
2.4.2 STAPLER MOVEMENT MOTOR INITIALIZATION ..... 35
2.4.3 STAPLER ERRORS ..... 36
2.5 PAPER OUTPUT ..... 37
2.5.1 OVERVIEW ..... 37
2.5.2 FEED-OUT ..... 40
2.5.3 FEED-OUT BELT INITIALIZATION ..... 41
2.5.4 FEED-OUT BELT ERRORS ..... 41
2.5.5 FEED-OUT EXTENSION ..... 42
2.6 TRAY OPERATION ..... 44
2.6.1 OVERVIEW ..... 44
2.6.2 TRAY LIFT CONTROL ..... 45
2.6.3 TRAY INITIALIZATION ..... 48
2.6.4 TRAY LIFT ERRORS ..... 49
2.7 ELECTRICAL COMPONENTS ..... 51
2.7.1 COMPONENT LAYOUT ..... 51
2.7.2 SUMMARY OF ELECTRICAL COMPONENTS ..... 52
2.7.3 TIMING CHARTS ..... 55
2.7.4 ERROR LIST ..... 56

**3. SPECIFICATIONS ..... 62**
3.1 SPECIFICATIONS ..... 62

# Read This First

## Safety, Conventions, Trademarks

### SAFETY

#### PREVENTION OF PHYSICAL INJURY

1. Before disassembling or assembling parts of the printer and peripherals, make sure that the printer and peripheral power cords are unplugged.
2. The power source should be near the printer and easily accessible.
3. Note that some components of the printer and the paper tray unit are supplied with electrical voltage even if the main power switch is turned off.
4. If any adjustment or operation check has to be made with exterior covers off or open while the main switch is turned on, keep hands away from electrified or mechanically driven components.
5. If the Start key is pressed before the copier completes the warm-up period (the Start key starts blinking red and green alternatively), keep hands away from the mechanical and the electrical components as the copier starts making copies as soon as the warm-up period is completed.
6. The inside and the metal parts of the fusing unit become extremely hot while the printer is operating. Be careful to avoid touching those components with your bare hands.
7. To prevent a fire or explosion, keep the machine away from flammable liquids, gases, and aerosols.

#### HEALTH SAFETY CONDITIONS

1. Never operate the copier without the ozone filters installed.
2. Always replace the ozone filters with the specified ones at the specified intervals.
3. Toner and developer are non-toxic, but if you get either of them in your eyes by accident, it may cause temporary eye discomfort. Try to remove with eye drops or flush with water as first aid. If unsuccessful, get medical attention.

#### OBSERVANCE OF ELECTRICAL SAFETY STANDARDS

1. The copier and its peripherals must be installed and maintained by a customer service representative who has completed the training course on those models.

#### SAFETY AND ECOLOGICAL NOTES FOR DISPOSAL

1. Do not incinerate toner bottles or used toner. Toner dust may ignite suddenly when exposed to an open flame.
2. Dispose of used toner, developer, and organic photoconductors in accordance with

local regulations. (These are non-toxic supplies.)

3. Dispose of replaced parts in accordance with local regulations.
4. When keeping used lithium batteries in order to dispose of them later, do not put more than 100 batteries per sealed box. Storing larger numbers or not sealing them apart may lead to chemical reactions and heat build-up.

**⚠CAUTION**

- The danger of explosion exists if a battery of this type is incorrectly replaced. Replace only with the same or an equivalent type recommended by the manufacturer. Discard used batteries in accordance with the manufacturer's instructions.

# CONVENTIONS AND TRADEMARKS

## CONVENTIONS

| Symbol | What it means |
|---|---|
| CT | Core Tech Manual |
| | Screw |
| | Connector |
| | E-ring |
| | C-ring |
| | Clamp |
| FFC | Flexible Film Connector |

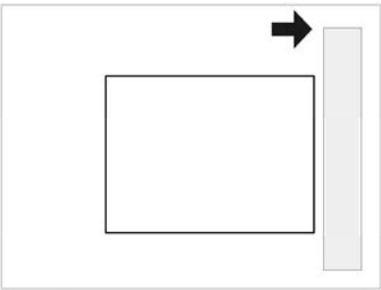

SEF (Short Edge Feed)

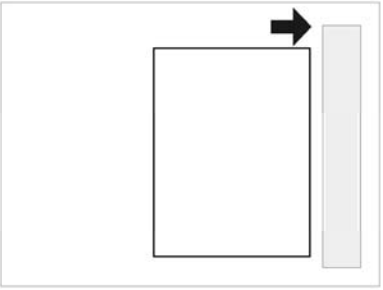

LEF (Long Edge Feed)

The notations "SEF" and "LEF" describe the direction of paper feed. The arrows indicate the direction of paper feed.

## WARNINGS, CAUTIONS, NOTES

In this manual, the following important symbols and notations are used.

**⚠ WARNING**

- A Warning indicates a potentially hazardous situation. Failure to obey a Warning could result in death or serious injury.

**⚠ CAUTION**

- A Caution indicates a potentially hazardous situation. Failure to obey a Caution could result in minor or moderate injury or damage to the machine or other property

**Important**

- Obey these guidelines to avoid problems such as misfeeds, damage to originals, loss of valuable data and to prevent damage to the machine

**Note**

- This information provides tips and advice about how to best service the machine.

### Trademarks

- Microsoft®, Windows®, and MS-DOS® are registered trademarks of Microsoft Corporation in the United States and /or other countries.
- PostScript® is a registered trademark of Adobe Systems, Incorporated.
- PCL® is a registered trademark of Hewlett-Packard Company.
- Ethernet® is a registered trademark of Xerox Corporation.
- PowerPC® is a registered trademark of International Business Machines Corporation.
- Other product names used herein are for identification purposes only and may be trademarks of their respective companies. We disclaim any and all rights involved with those marks.

# 1. REPLACEMENT AND ADJUSTMENT

## 1.1 COMMON PROCEDURES

### 1.1.1 DISCONNECTING, REMOVING THE FINISHER

Important

- The finisher must be removed from the machine for these procedures. The front and rear covers cannot be removed while the finisher is attached to the side of the machine.

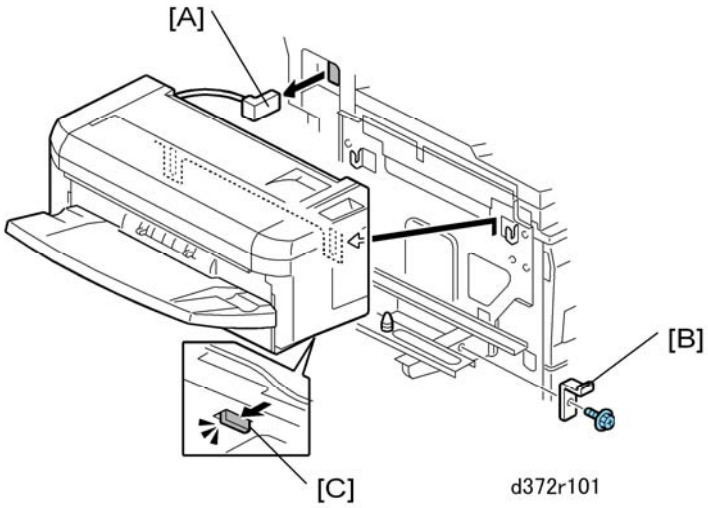


1. Disconnect the finisher I/F cable [A] on the left side of the machine.
2. Remove the lock plate [B] (🔩 x1).
3. Press the spring release [C] toward the rear of the finisher, then lift the finisher off its center post.

## 1.1.2 FRONT COVER

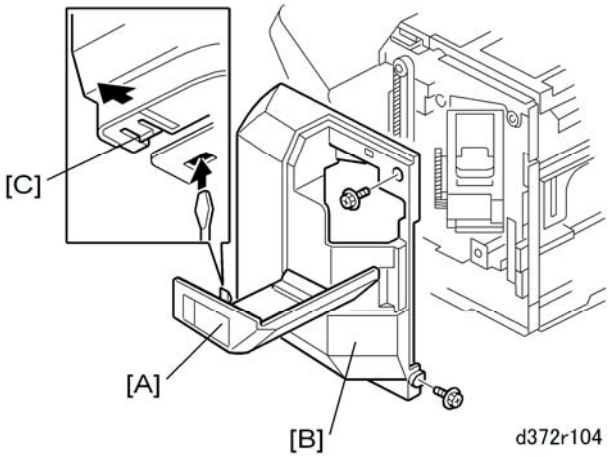


**Preparation**

- Disconnect the finisher.
- Remove the finisher from the side of the machine.

1. Open the stapler door [A].
2. Remove the front cover [B] (🔩 x2)
   Release tab [C] after removing the screws, then raise the bottom of the front cover to remove it.

## 1.1.3 REAR COVER

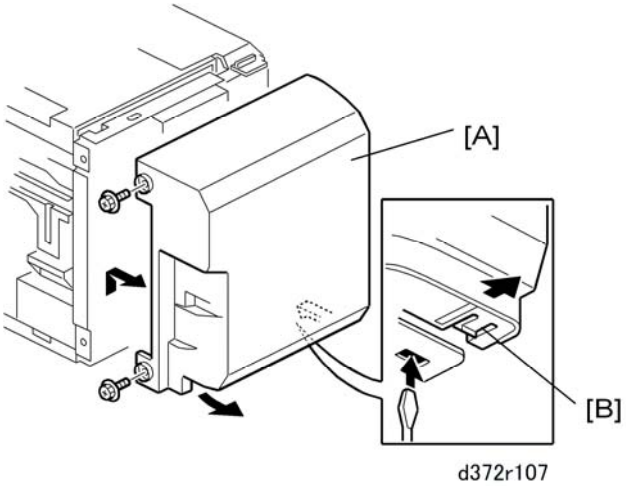


**Preparation**

- Disconnect the finisher.
- Remove the finisher from the side of the machine.

1. Remove the rear cover [A] (🔩 x2)
   Release tab [B] after removing the screws, then raise the bottom of the rear cover to remove it.

## 1.1.4 TRANSPORT UNIT

**Preparation**

Remove:

- Front cover
- Rear cover

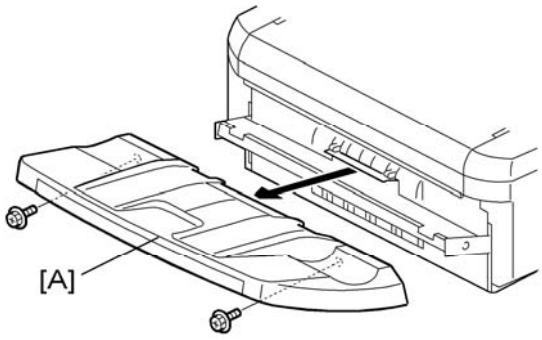


d372d102

1. Remove the paper output tray [A] (☞ x2).

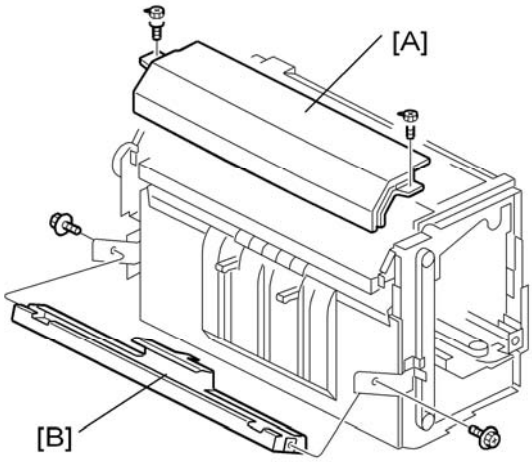


d372r114

2. Remove the left top cover [A] (☞ x2).
3. Remove the tray support [B] (☞ x2).

**Common Procedures**

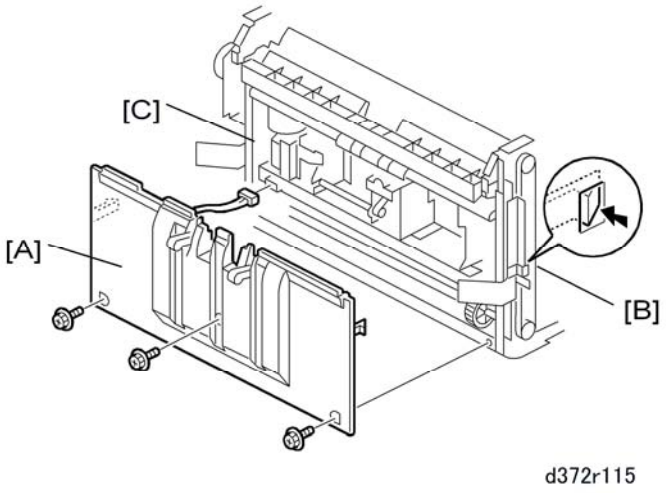


4. Remove the screws of the end fence [A] (🔩 x3).
5. Release tabs [B] and [C].
6. Remove the end fence.

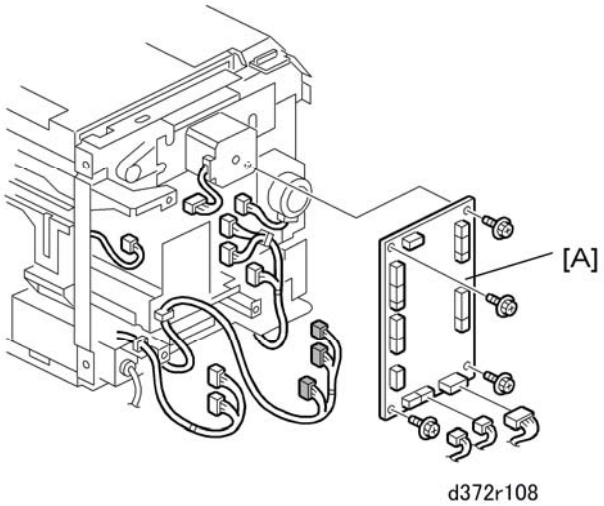


7. Remove the main board [A] (✋ x 14, 🔩 x4)

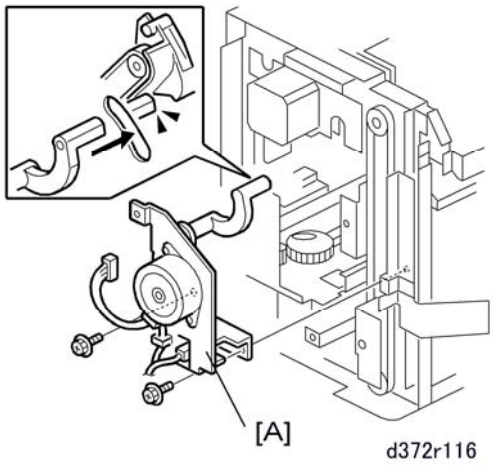

8. Remove the positioning roller arm motor bracket [A] (🔩 x2).

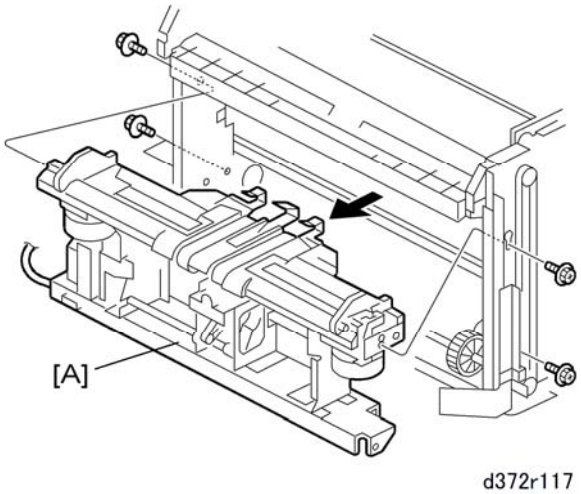


9. Remove the transport unit [A] (🔩 x3 Rear, 🔩 x2 Front).

# 1.2 SENSORS

## 1.2.1 ENTRANCE SENSOR

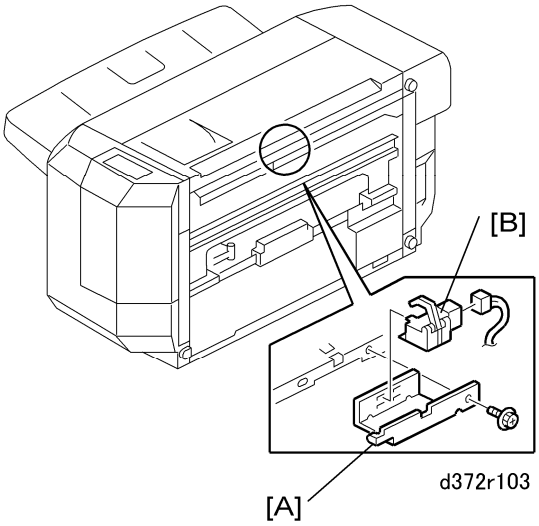


**Preparation**

- Disconnect the finisher.
- Remove the finisher from the side of the machine.

1. Remove the sensor bracket [A] (🔩 x1).
2. Disconnect the entrance sensor [B] (Pawls x4, 🖐 x1).

## 1.2.2 PAPER SENSOR

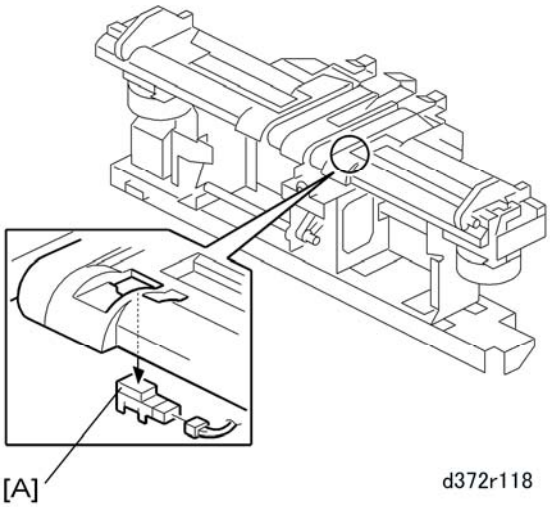


**Preparation**

- Disconnect the finisher.

- Remove the finisher from the side of the machine.
- Remove the transport unit

1. Disconnect the sensor [A] (☏ x1, Pawls x3, ☏ x1)

# 1.3 MOTORS

## 1.3.1 TRAY LIFT MOTOR

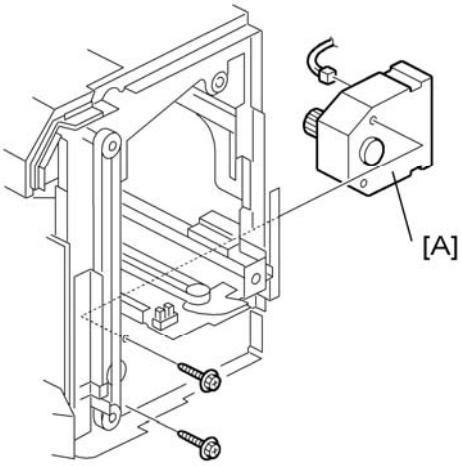


d372r106

**Preparation**

- Disconnect the finisher.
- Remove the finisher from the side of the machine.
- Remove the front cover

1. Remove the tray lift motor [A] ( x2, x1).

## 1.3.2 TRANSPORT MOTOR

**Preparation**

- Disconnect the finisher.
- Remove the finisher from the side of the machine.
- Remove the rear cover.

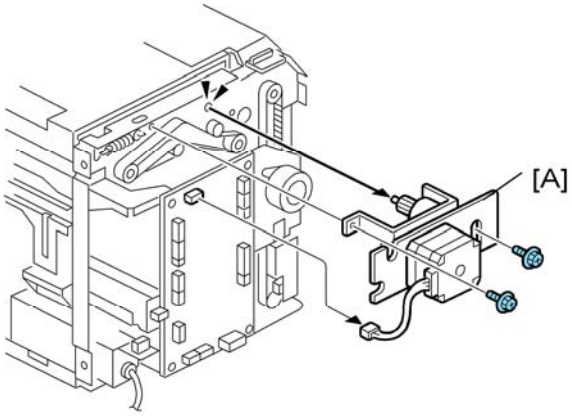


d372r110

1. Remove the motor bracket [A] (☞ x2, ☞ x1)

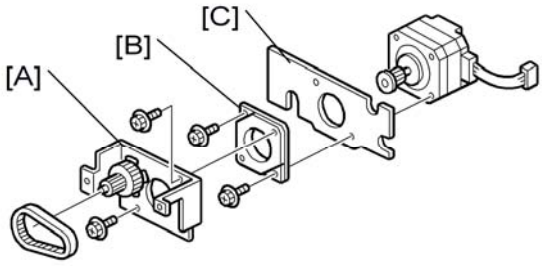


d372r111

2. Remove:
   [A] 1st bracket (Timing belt x1, ☞x2)
   [B] 2nd bracket (☞x2)
   [C] 3rd bracket

**Reinstallation**

- After reattaching the motor, rotate its drive gear and confirm that the timing belt is set correctly.
- Rotate the motor drive gear by hand and confirm that these rollers are turning: 1) entrance roller, 2) positioning roller, and 3) return rollers. (The return rollers are the two small sponge rollers below the positioning roller.)



## 1.3.3 POSITIONING ROLLER ARM MOTOR

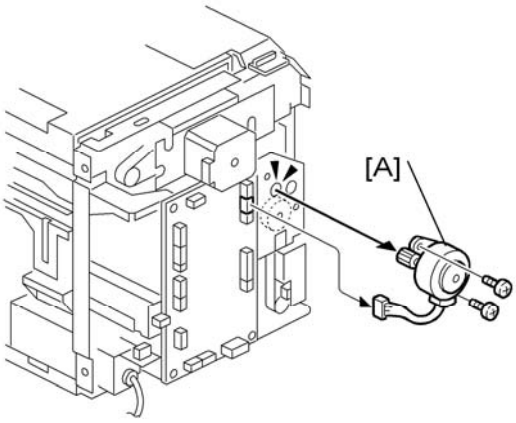


d372r109

**Preparation**

- Disconnect the finisher.
- Remove the finisher from the side of the machine.
- Remove the rear cover.

1. Remove the positioning roller arm motor [A] (☞ x2, ☞ x1).

## 1.3.4 STAPLER MOVEMENT MOTOR

### Preparation

- Disconnect the finisher.
- Remove the finisher from the side of the machine.
- Remove the rear cover.

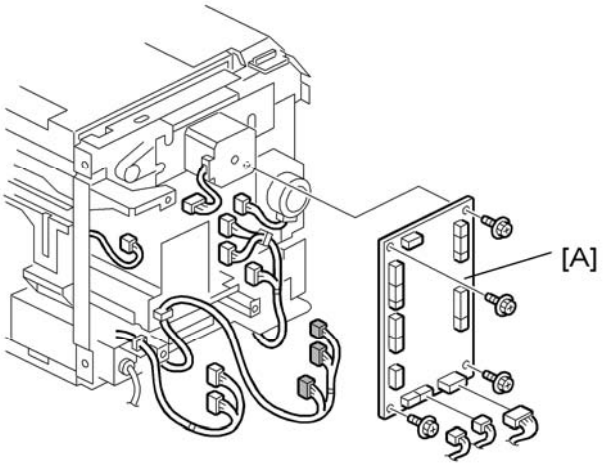


d372r108

1. Remove the main board [A] (x 14, x4).

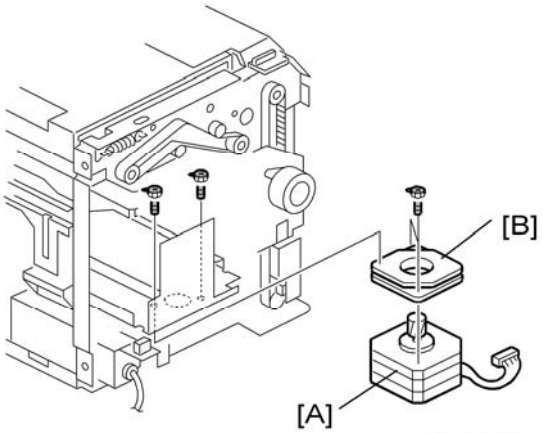


d372r112

2. Remove the stapler movement motor [A] (x2, x1).
3. Remove the bracket [B] (x2).

## 1.3.5 FRONT FENCE MOTOR

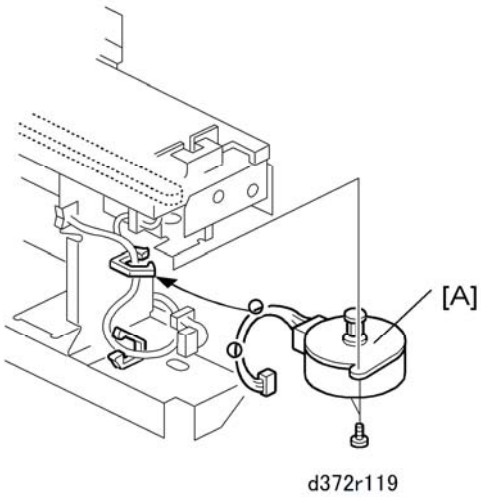


**Preparation**

- Disconnect the finisher.
- Remove the finisher from the side of the machine.
- Remove the transport unit

1. Remove the front fence motor [A] (x1, x2, x1).

## 1.3.6 FEED-OUT BELT MOTOR, REAR FENCE MOTOR

**Preparation**

- Disconnect the finisher.
- Remove the finisher from the side of the machine.
- Remove the transport unit

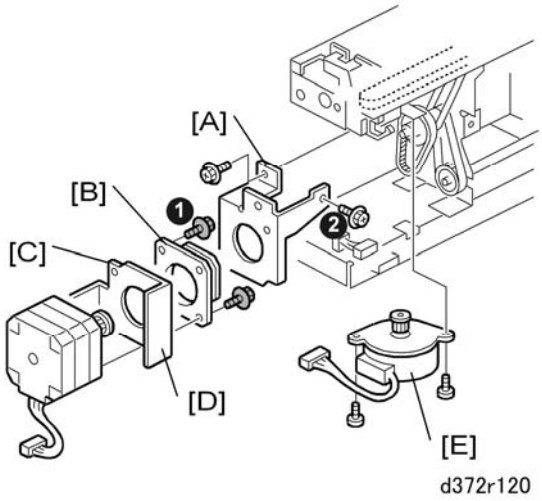


1. Remove the feed-out belt motor mount [A] ①, ② (x2).
2. Remove:

**Motors**

[B] 1st bracket (x2)

[C] 2nd bracket (x2)

[D] 3rd bracket

3. Remove the rear fence motor [E] (x2, x1)

# 1.4 BOARDS

## 1.4.1 MAIN BOARD

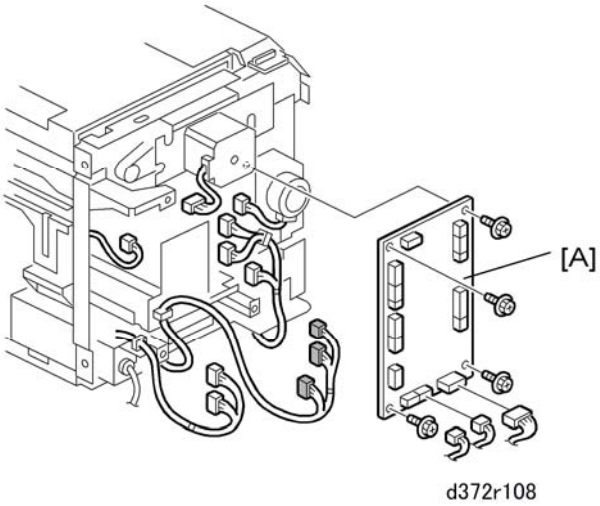


**Preparation**

- Disconnect the finisher.
- Remove the finisher from the side of the machine.
- Remove the rear cover.

1. Remove the main board [A] (x14, x4)

# 1.5 OTHERS

## 1.5.1 STAPLER

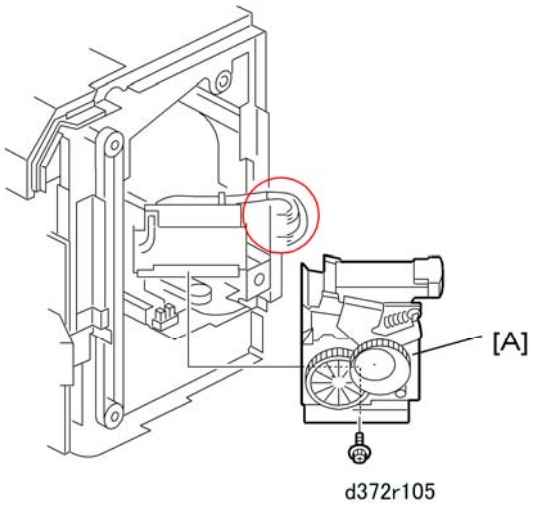


**Preparation**

- Remove the front cover.

1. Remove the stapler [A] (☞ x1, ☞ x2)

## 1.5.2 POSITIONING ROLLER

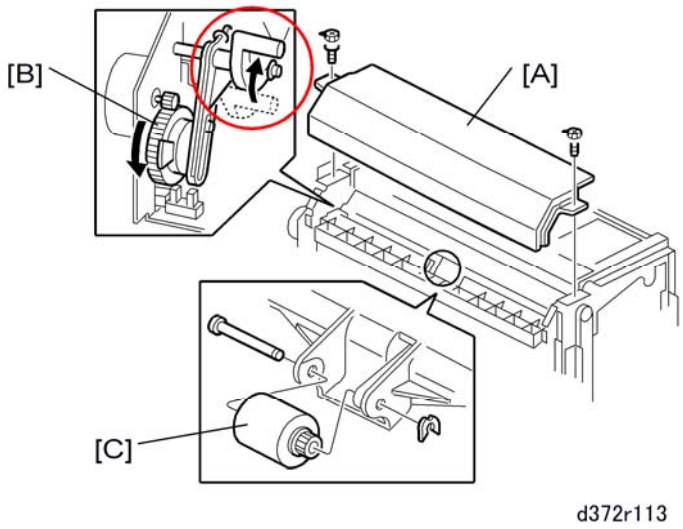


**Preparation**

- Disconnect the finisher.
- Remove the finisher from the side of the machine.
- Remove the front cover.

- Remove the rear cover.

1. Remove the left top cover [A] (x2)
2. Rotate drive gear [B] of the positioning roller arm motor to raise the positioning roller to its highest position.
3. Remove the positioning roller [C] (x1)

# 2. DETAILED SECTION DESCRIPTIONS

## 2.1 OVERVIEW

### 2.1.1 IMPORTANT PARTS

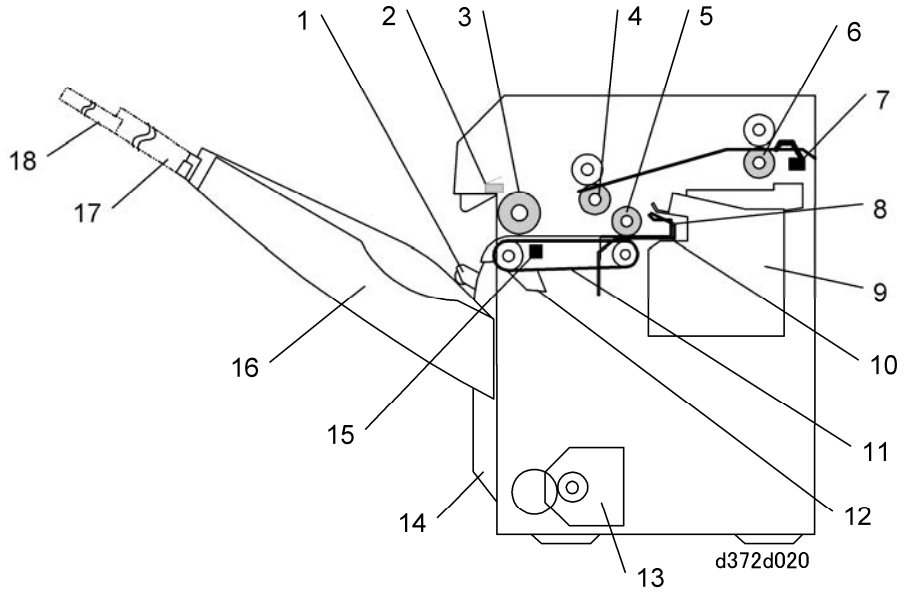


| | | | |
|---|---|---|---|
| 1. | Stack Edge Depressors (x2) | 10. | Bottom Fences |
| 2. | Tray Upper Limit Switch | 11. | Feed-out Belt |
| 3. | Positioning Roller | 12. | Feed-out Belt Pawls (x2) |
| 4. | Exit Roller | 13. | Tray Lift Motor |
| 5. | Return Roller | 14. | End Fence |
| 6. | Entrance Roller | 15. | Paper Sensor |
| 7. | Entrance Sensor | 16. | Output Tray |
| 8. | Mobile Fence (x1) | 17. | Tray Extension (Middle) |
| 9. | Stapler | 18. | Tray Extension (End) |

## 2.1.2 EXTERNAL DIMENSIONS

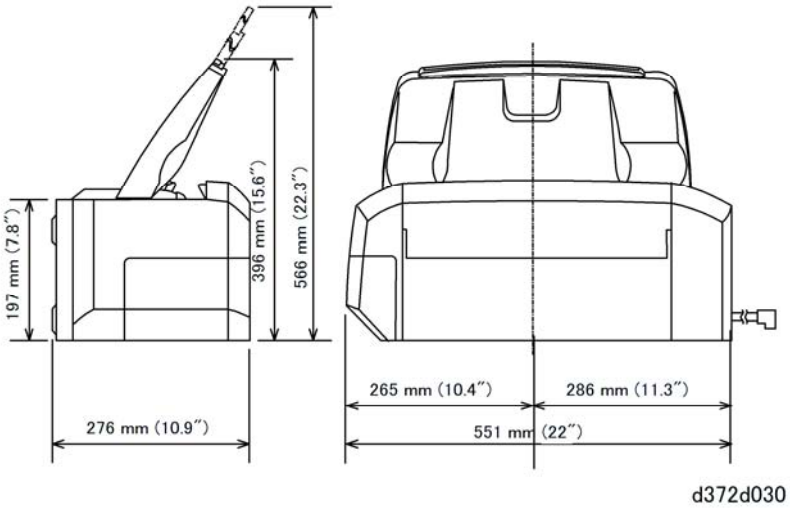


## 2.1.3 GENERAL OPERATION

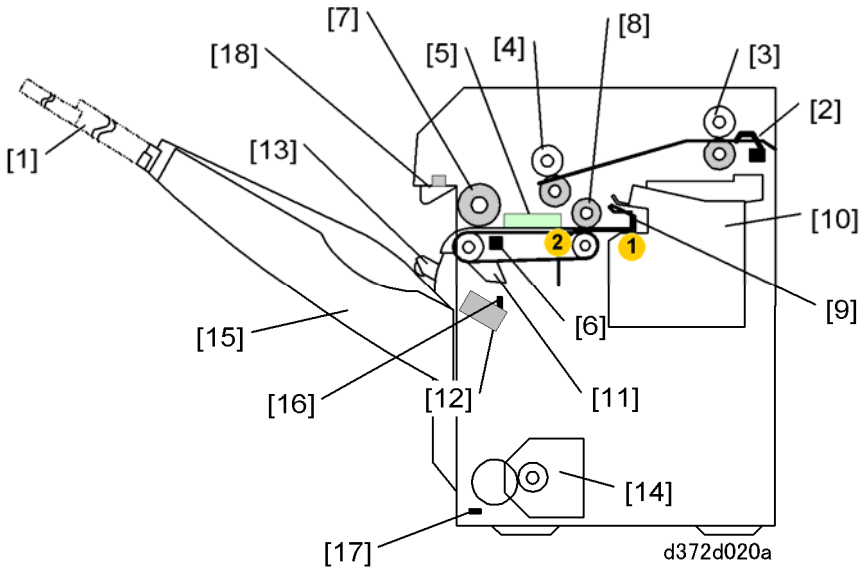


Here is a brief summary of what happens inside the finisher. For more details, see the other sections of this manual.

First, the operator pulls out the tray extension [1], and selects the paper size and operation mode for the job (Normal, Shift, or Stapling).

**Paper Transport**

The entrance sensor [2] detects the paper when it enters the finisher. The entrance rollers [3] feed the paper to the exit rollers [4]. The paper falls between the front and side fences [5].

## Overview

### Positioning

The paper sensor [6] detects the paper on the tray. The positioning roller [7] (mounted on a free-swinging arm) descends and touches the paper. The positioning roller (turning counterclockwise) and the return roller [8] push the trailing edge of the paper against the two bottom fences and the mobile fence at [9]. (The mobile fence is centered between the stationary bottom fences.)

### Jogging

The front and side fences move in to align the sheets for stacking.

### Stapling

The stapler [10] staples the stack with one or two staples.

### Paper Output

The feed-out belt motor switches on, moves the mobile fence forward and rotates the feed-out belt with the feed-out belt pawls [11]. The mobile fence pushes the stack from ① to ②, then the pawls come around and push the stack out of the finisher. Before the next stack exits, the edge depressor solenoid [12] switches on and retracts the edge depressors just before the feed-out belt pawls push the stack out. The two stack edge depressors [13] lightly push down on the trailing edge of the stack to keep it down against the end fence. The edge depressors are attached to the paper height sensor, so this action checks if it is necessary to move the tray up or down.

### Tray Operation

The tray lift motor [14] raises and lowers the output tray [15] to keep the tray at the correct height. The readings of the paper height sensor [16] are used to control the raising and lowering of the tray with the tray lift motor.

The tray-full sensor [17] located at the bottom of the tray rail at the back of the finisher switches on after the tray descends to its lowest point. This signals that the tray is full. A spring-loaded bar [18] and its push-switch also signal tray full if the top of the paper load in the tray pushes this bar up and trips the switch. (This is a backup device to signal tray full if the tray-full sensor fails.)

## 2.1.4 INITIALIZATION: WHAT HAPPENS AT POWER ON

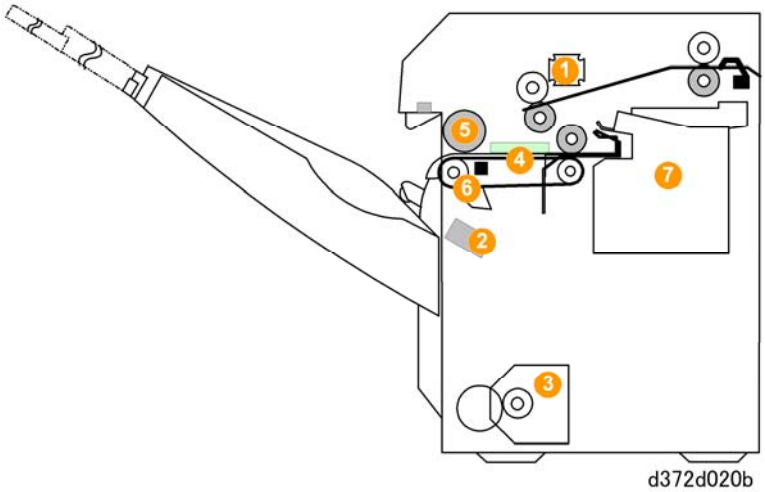


Here is a summary of what happens during the initialization of the finisher after the system power is turned on.

Note

- The initialization halts if the entrance sensor or paper sensor on the stapling tray detects paper inside the finisher.

| No. | What Happens |
|---|---|
| 1 | The transport motor roller switches on and off. |
| 2 | The edge depressor solenoid switches on, retracts the edge depressors, and then switches off to allow the depressors to lower. |
| 3 | The tray lift motor switches on, lowers the tray slightly, raises it to the start position and switches off. |
| 4 | The front and side fence motors switch on and off to position both side fences at their home positions (both retracted). |
| 5 | The positioning roller arm motor switches on and off to bring the positioning roller to its home position (up). |
| 6 | The feed-out belt motor switches on and moves the belt pawls to their home positions below the paper sensor on the stapling tray. |
| 7 | The stapler movement motor switches on, reverses, and then switches off to make |

**Overview**

| No. | What Happens |
|---|---|
| | sure that the stapler is at its home position. |

# 2.2 PAPER TRANSPORT

## 2.2.1 OVERVIEW

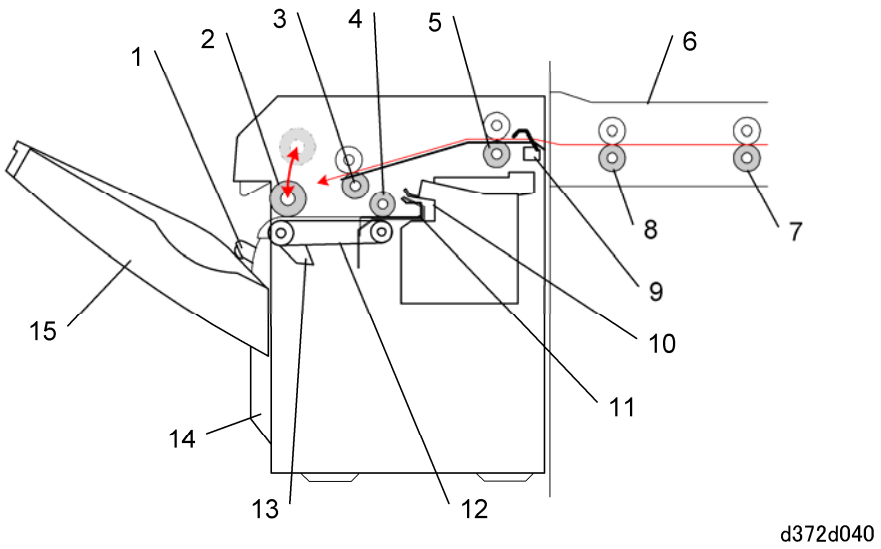


| | | | |
|---|---|---|---|
| 1. | Stack Edge Depressors | 9. | Entrance Sensor |
| 2. | Positioning Roller | 10. | Mobile Fence |
| 3. | Exit Roller | 11. | Bottom Fences (x2) |
| 4. | Return Rollers | 12. | Feed-Out Belts (x2) |
| 5. | Entrance Roller | 13. | Feed-Out Belt Pawls (x2) |
| 6. | Bridge Unit (Copier) | 14. | End Fence |
| 7. | Transport Roller (Main Machine) | 15. | Output Tray |
| 8. | Exit Roller (Main Machine) | | |

## 2.2.2 TRANSPORT ROLLERS

### *Paper Feed Rollers*

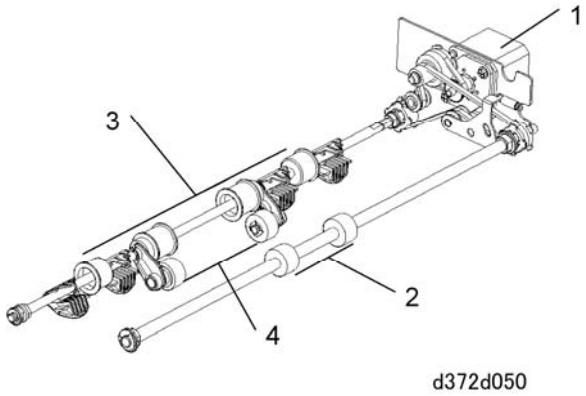


| | |
|---|---|
| 1. | Transport Motor |
| 2. | Entrance Rollers |
| 3. | Exit Rollers (Teflon) |
| 4. | Return Rollers (Sponge) |

The transport motor [1] uses timing belts to drive all the rollers in the unit.
The entrance rollers [2] take the paper from the copier and feed it to the exit rollers [3], where the paper drops onto the jogging and stapling tray. The return rollers [4] rotate in the opposite direction and feed each sheet against the bottom fences inside the finisher. The positioning roller (described in the next section) assists the return rollers in feeding each sheet against the end fences.

## 2.2.3 POSITIONING ROLLER

### *Positioning Roller Mechanism*

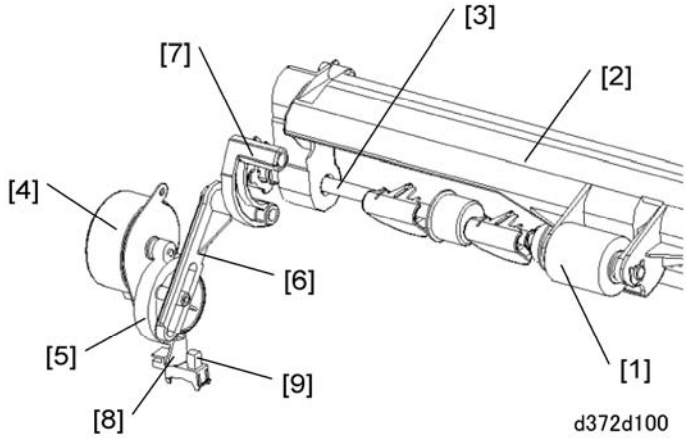


The positioning roller [1] (driven by the transport motor) is mounted on the positioning roller arm [2] that swings freely on the shaft [3].

The positioning roller arm motor [4] drives a cam [5]. The eccentric rotation of this cam raises and lowers the coupler [6] that pushes against the positioning roller arm [7]. This motion raises and lowers the rotating positioning roller as the cam turns through one full rotation.

An actuator [8] attached to the cam wheel deactivates the positioning roller HP sensor [9] and stops the motor. This stops the positioning roller arm and positioning roller at the highest point (home position).

When the positioning roller is lowered:

- The transport motor slows down to match the speed of the main machine's exit roller.
- At the same time, the positioning roller motor accelerates briefly, lowers the positioning roller arm and then stops.

When the positioning roller touches the paper:

- The positioning roller (driven by the transport roller) continues to rotate.
- The positioning roller (and the smaller two sponge rollers), rotating against the direction of paper feed, touch the paper and send it back against the bottom fences.
- The number of sheets that stack on the staple tray while the positioning roller motor is stopped is different for each job.
- To meet the requirement for the increasing number of sheets, the length of prescribed time that the positioning roller is in contact with each sheet of paper is very short, regardless of the size of the stack.
- The positioning roller arm motor remains off just long enough for the positioning roller to send the sheet against the bottom fences.

**Paper Transport**

When the positioning roller is raised:

- The motor switches on again, raises the positioning roller arm, slows down slightly, and then the arm stops at the home position.
- The motor slows down slightly before reaching the home position to reduce the impact and noise of the arm returning to the home position.

This cycle of lowering the positioning roller, touching the paper with the positioning roller and return rollers, and then lifting them again and stopping at the home position, is done for each sheet of paper.

## *Transport Motor Control*

The transport motor drives all the rollers inside the finisher and controls the line speed of the finisher.

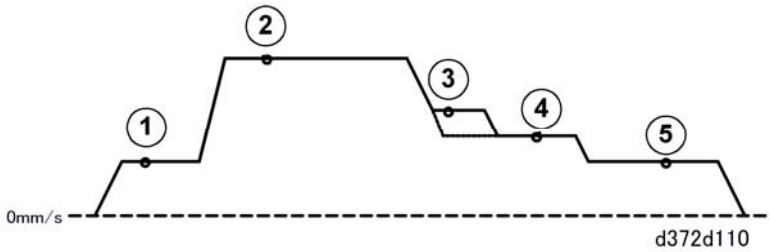


| | |
|---|---|
| ① | The transport motor accelerates to match the line speed of the main machine (150 mm/s). |
| ② | The transport motor speed accelerates to 600 mm/s after the leading edge of the sheet passes the entrance sensor and feeds 21.5 mm. |
| ③ | After the trailing edge goes 96 mm past the entrance sensor, the transport motor slows the line speed to 200 mm/s for paper shorter than 300 mm, or to 300 mm/s for paper longer than 300 mm. |
| ④ | After the paper sensor detects that the trailing has fed 45 mm past the exit roller, the transport motor slows the line speed to 200 mm/s so that the sheet can be positioned for jogging. At this time, the positioning roller arm motor switches on and starts to lower the positioning roller arm and positioning roller. |
| ⑤ | The transport motor slows the line speed in the finisher to match the line speed of the paper path in the main machine. The positioning roller reaches the end of its downward stroke and remains in that position long enough to feed the sheet back against the bottom fences. The positioning roller arm motor reverses and raises the |

| | |
|---|---|
| | positioning roller arm to the end of its upward stroke and stops at the home position. While the sheet is being jogged between the front and rear side fences, the cycle repeats from ② when the next sheet feeds. |

## 2.2.4 POSITIONING ROLLER INITIALIZATION

The following sequence occurs when the system is switched on:

### *Paper in Paper Path (Jam)*

If paper is detected in the paper path between the copier exit roller and finisher entrance roller, the transport motor switches on then immediately switches off.

### *Normal Startup*

The transport motor switches on and rotates the positioning roller to home position. The positioning roller arm motor switches on, lowers the positioning roller arm, raises the positioning roller to the up position and then stops when the actuator of the positioning roller HP sensor switches off the sensor.

- If the HP sensor does not go OFF within the prescribed time, this indicates an error.
- If the HP sensor does not go ON after the motor has switched on, this also indicates an error.

In either case, the positioning roller arm motor is switched off. The first occurrence causes a jam error. An SC code is issued if the error occurs again.

This initialization sequence is executed:

- When the copier is powered on
- When the stapler door is opened or closed
- When the top cover of the finisher is opened or closed to remove a jam

# 2.3 JOGGING (PAPER ALIGNMENT)

## 2.3.1 OVERVIEW

Two side fences, a rear fence and a front fence, move in and out to align the sides of the paper stack. Each fence is controlled by an independent timing belt and motor.

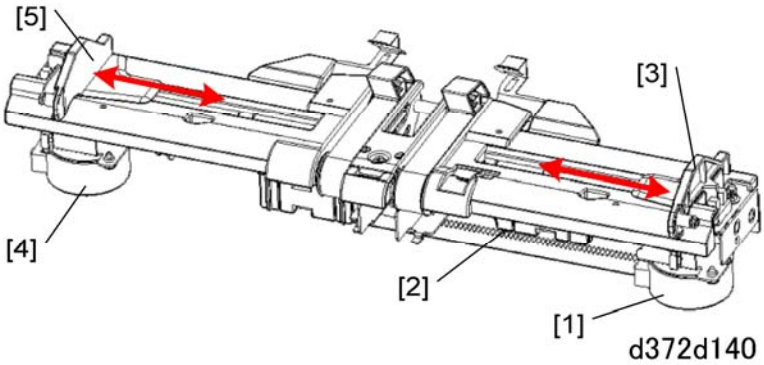


The front fence motor [1] and timing belt [2] move the front fence [3] backward and forward. The rear fence motor [4] and timing belt (not shown) move the rear fence [5] forward and backward.

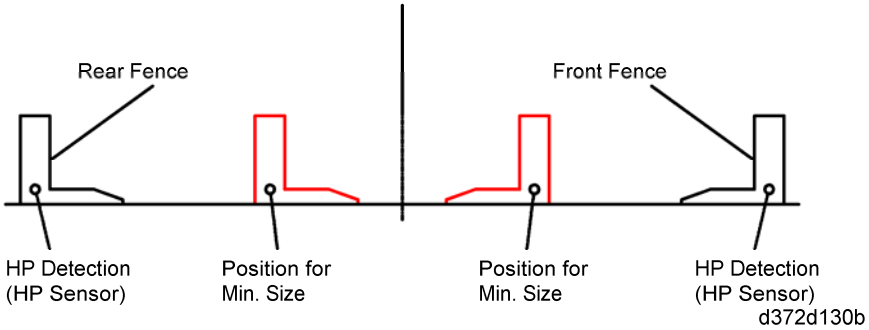


The diagram above shows the positions of the side fences.

1. When the copier exit sensor signals that that a sheet of paper has been sent from the copier to the finisher, both fence motors switch on and move the side fences to the start position.

   The start position for each fence is set wider than the paper size selected for the job:

   - 15 mm wider than the paper for shift mode.
   - 7 mm wider than the paper for staple mode
   - 10 mm wider than 12-in. paper for oblique stapling
   - 12 mm wider than 12-in. paper for straight stapling
2. The paper is fed onto the output tray. The transport motor slows down the rotation of

the positioning roller and return rollers. The positioning roller descends. The positioning roller and return rollers feed the trailing edge of the paper to the right against the bottom fences. The side fence motors switch on and jog the edges of the sheet so that the first sheet is properly aligned.

3. The side fences return to the start position after the next sheet has feed 50 mm past the entrance sensor.
4. Steps 2 and 3 are repeated for the next sheet.
5. In stapling mode: After the last page of the document has fed and been aligned on top of the stack by the rear and front fences, the side fences retract and advance two more times against the sides of the complete stack.
6. The stack is now ready to be output from the finisher. The side fences stop at the sides of the stack and wait for the stack to be output. After output, the side fence motors switch on and move the fences to the jog start position.
   - As soon as 10 sheets stack on the jogging tray in shift mode, the stack is output regardless of whether the document has finished printing or not.
   - In stapling mode, the side fence that jogs the side of the stack stops and waits for stapling to end. After stapling, the side fence motor switches on and retracts the side fence 0.5 mm. (If the stack is centered, both fences retract 0.25 mm).
   - After the stack is output by the feed-out belt, the side fence motors switch on and once again move the fences to the jog start position.
7. In the shift mode: The rear side fence does the jogging against the side of the stack, and the front fence does not move. For the next stack, the roles of the side fences are reversed: the front fence does the jogging and the rear fence does not move. The operation continues to alternate for the next stacks so that each stack is shifted to the front (or back) depending how it was jogged between the side fences. (Steps 2, 3, 6 repeat.)
   In the staple mode, the steps are done in sequence (2), (3), (5), (6).
8. After the last stack of the job has been output, the main machine sends a STOP signal to end the job, and the front and rear side fence motors switch on and the side fences retract to their home positions.

## 2.3.2 SIDE FENCE OPERATION

### *Shift Mode*

**Side Fence Operation: Shift Mode**

**Jogging (Paper Alignment)**

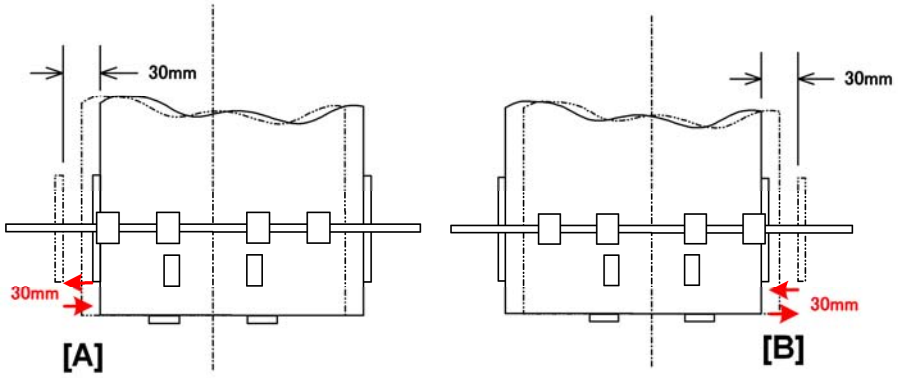


d372d170a

The diagram above illustrates the operation of the side fences in shift mode with no stapling.

- Every sheet of the first set is pushed by the front fence [A] against the rear fence, which does not move.
- Every sheet of the second set is pushed by the rear fence [B] against the front fence, which does not move.
- The sequence alternates for every set in the print job. At the end of the job, every set is stacked on the output tray neatly offset by 30 mm, making them easy to separate.

## *Normal (Non-Shift) Mode*

The diagram above illustrates the operation of the side fences in normal (non-shift) mode. The operation is slightly different, depending on the paper size. There are three cases:

- Standard paper sizes (other than "wide" or "small" paper
- Wide paper sizes (133 to 147 mm)
- Small paper sizes (up to 133 mm)

**Standard Paper Sizes**

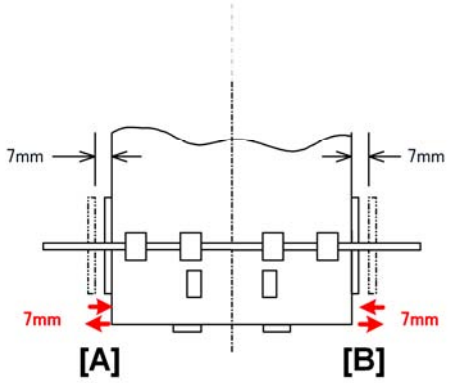


d372d180a

Every time a sheet is fed the front fence [A] and rear fence [B] both push against the sides of the stack within the space of 7 mm on each side.

**Wide and Small Paper Sizes**

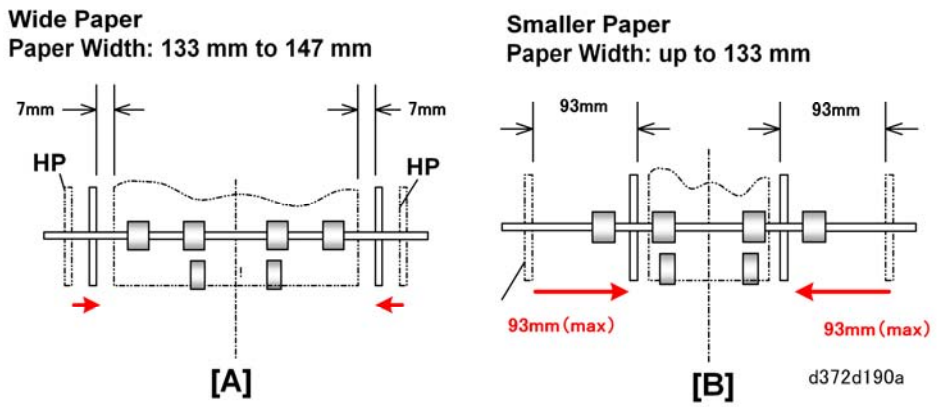


Every time a wide sheet [A] is fed, the front fence and rear fence both push against the sides of the stack within the space of 7 mm on each side.

Every time a smaller sheet [B] is fed, the front fence and rear fence both push against the sides of the fence with the space of 93 mm on each side.

## *Staple Mode*

The operation of the side fences is slightly different, depending on the type of stapling selected for the job:

- One staple (front/oblique, front/straight, rear/oblique, rear straight)
- Two staples at two positions

**Staple Mode: 1 Staple**

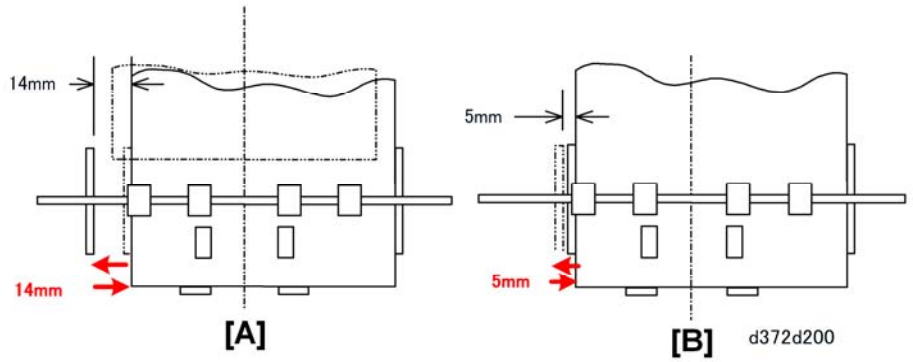


In the One-Staple Mode, one side fence jogs one side of the stack. The diagram above illustrates the operation of the side fences for stapling at one position (front/oblique, front/straight, rear/oblique, or rear/straight).

- Every time a sheet [A] is fed, the front fence pushes the sheet against the rear fence, which does not move.
- After the last sheet [B] is pushed against the rear fence, the front fence moves front to back twice (5 mm) to align the side of the stack for stapling.

**Staple Mode: 2 Staples**

**Jogging (Paper Alignment)**

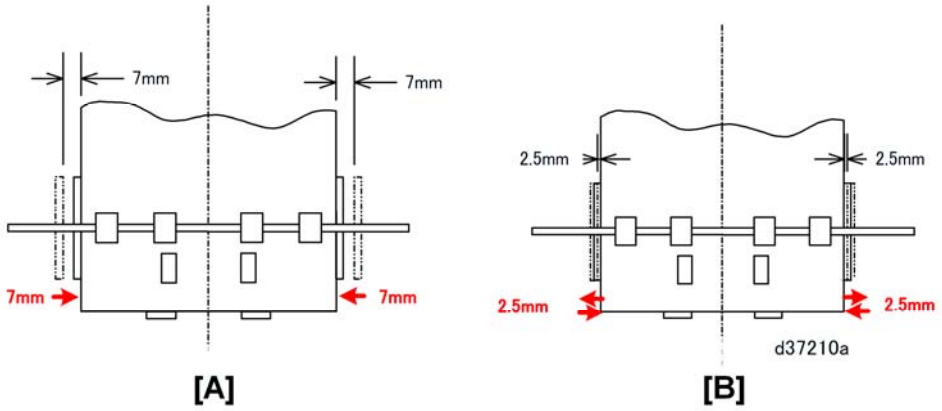


In the Two-Staple Mode, both side fences jog the sides of the stack. The diagram above illustrates the operation of the side fences for stapling at two positions.

- Every time a sheet [A] is fed, the front and rear side fences push the sheet to center it.
- After the last sheet [B] is centered, the front and side fences push and retract twice (5 mm) to align the sides of the stack centered for stapling.

## 2.3.3 SIDE FENCE INITIALIZATION

Initialization of the front and rear side fence positions at power on is determined by the states of the front fence HP sensor and rear fence HP sensor. The descriptions below apply to both HP sensors.

- Paper on Stapling Tray
  Initialization is not executed if the paper sensor on the stapling tray detects paper present.
- Fence HP Sensor OFF
  The fence motor switches on until the HP sensor goes ON, advances 0.25 mm, then switches OFF. This is the home position.
- Fence HP sensor ON
  The fence motor drives the fence toward the center until the HP sensor goes OFF, advances 15 mm, then switches off. The motor switches ON again, advances the fence 0.25 mm, then switches off. (This is the home position.)

## 2.3.4 SIDE FENCE MOTOR ERRORS

A side fence motor error can occur in two cases:

- The HP sensor does not go OFF even after the side fence has run long enough to advance the fence 12.5 mm from the fence home position, far enough to deactivate the fence HP sensor.
- The HP sensor does not go ON even after the motor has run long enough for the side fence to retract 105.0 mm, far enough for the fence to reach the side fence HP sensor.

When an error occurs the finisher ceases to operate (all motors are switched off with the exception of the stapler movement motor).

Errors for the front fence and rear fence motors are counted separately.

- The first occurrence of an error issues a paper jam alert.
- The second occurrence of an error issues an SC code. SC721 is issued for the front fence motor and SC722 for the rear fence motor.

To recover from an error:

- At the first occurrence of the error after a paper jam error, opening and closing either the top cover or the stapler door triggers the initial check and restores normal operation if no problems are detected.
- At the second occurrence after an SC code is issued, cycling the main machine off/on may restore full operation if no problems are detected.

## 2.3.5 SIDE FENCE OPERATION ADJUSTMENT



The distance between the front and rear side fences can be adjusted with DIP SW100. The DIP SW adjustment is done in increments of 0.5 mm (Max. Range: ±3.5 mm).

- The adjustment is halved for center jogging. If the adjustment is 0.5 mm, for example, this means the position adjustment 0.25 mm for each side fence.

The table below shows the adjustments done with DIP SW100 on the main board of the finisher.

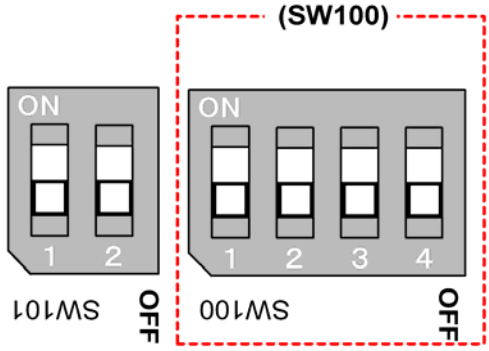


**DIP SW**

| 1 | 2 | 3 | 4 | Adjustment (mm) |
|---|---|---|---|---|
| ON | ON | ON | ON | -3.5 |
| ON | ON | ON | OFF | -3.0 |
| ON | ON | OFF | ON | -2.5 |

**Jogging (Paper Alignment)**

| 1 | 2 | 3 | 4 | Adjustment (mm) |
|---|---|---|---|---|
| ON | ON | OFF | OFF | -2.0 |
| ON | OFF | ON | ON | -1.5 |
| ON | OFF | ON | OFF | -1.0 |
| ON | OFF | OFF | ON | -0.5 |
| ON | OFF | OFF | OFF | 0.0 |
| OFF | ON | ON | ON | 3.5 |
| OFF | ON | ON | OFF | 3.0 |
| OFF | ON | OFF | ON | 2.5 |
| OFF | ON | OFF | OFF | 2.0 |
| OFF | OFF | ON | ON | 1.5 |
| OFF | OFF | ON | OFF | 1.0 |
| OFF | OFF | OFF | ON | 0.5 |
| OFF | OFF | OFF | OFF | 0.0 |

# 2.4 STAPLING

## 2.4.1 OVERVIEW

### *Stapler Movement*

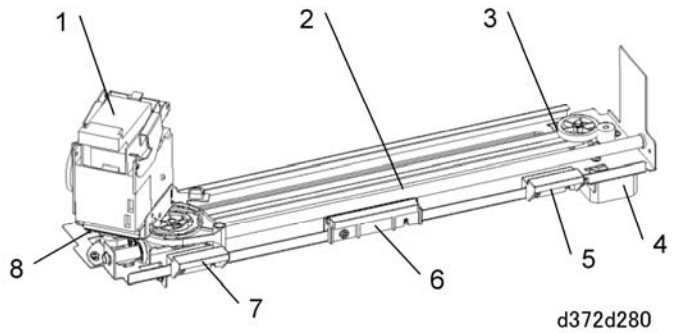


| | | | |
|---|---|---|---|
| 1. | Stapler Unit | 5. | Trip Plate – Rear |
| 2. | Guide Rail | 6. | Trip Plate – Center |
| 3. | Driver Gear, Timing Belt | 7. | Trip Plate – Front |
| 4. | Stapler Movement Motor | 8. | Stapler HP Sensor |

The illustration below shows how the stapler moves during each stapling mode.

Note

- When the plate on the bottom of the stapler unit strikes a trip plate, this swivels the stapler unit from straight to oblique or vice versa.

## Stapling

### Staple Positions

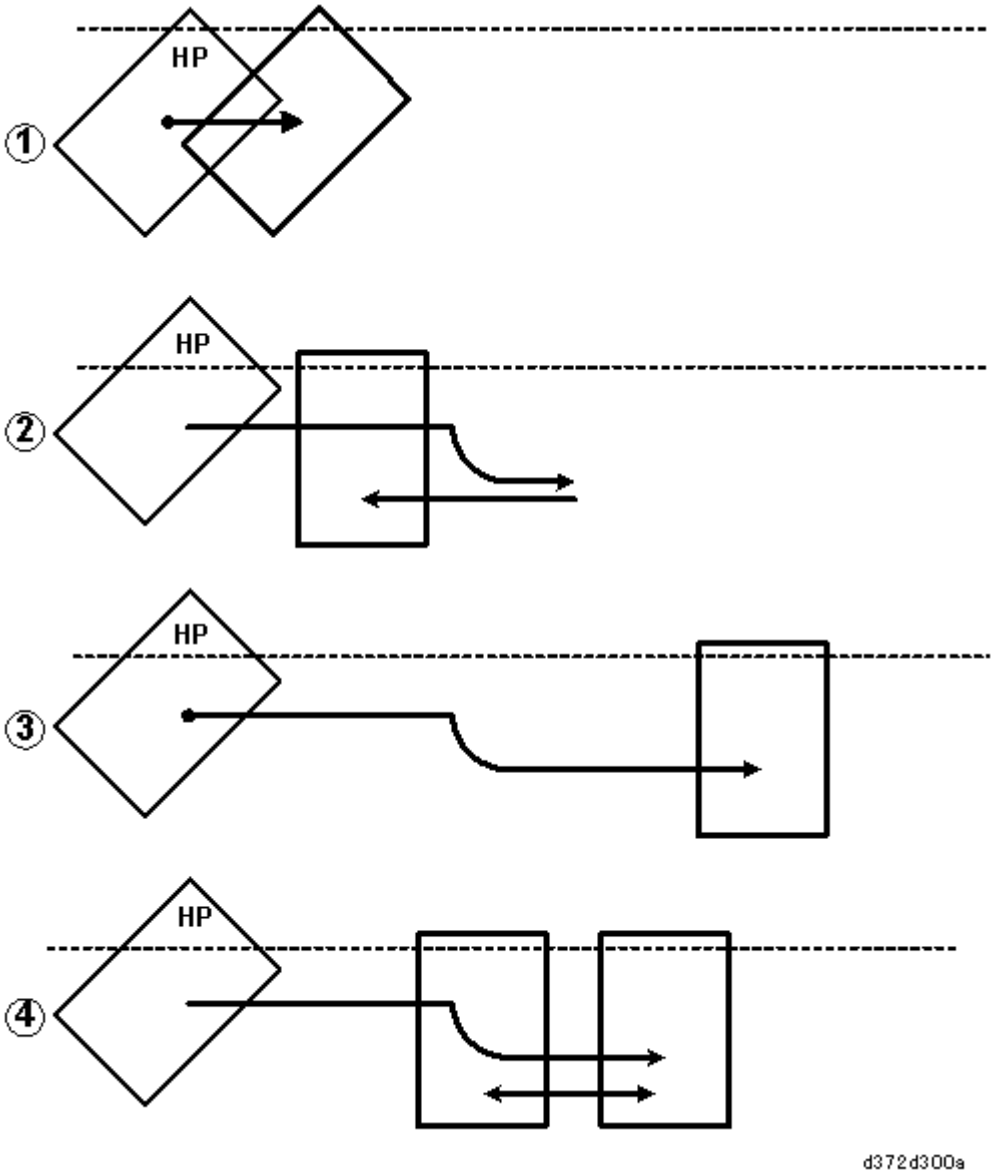


| | |
|---|---|
| ① | Front Oblique Stapling: 1 Staple |
| ② | Front Straight Stapling: 1 Staple |
| ③ | Rear Straight Stapling: 1 Staple |
| ④ | 2 Staples (Rear then Front) |

### *Stapler EH-530*

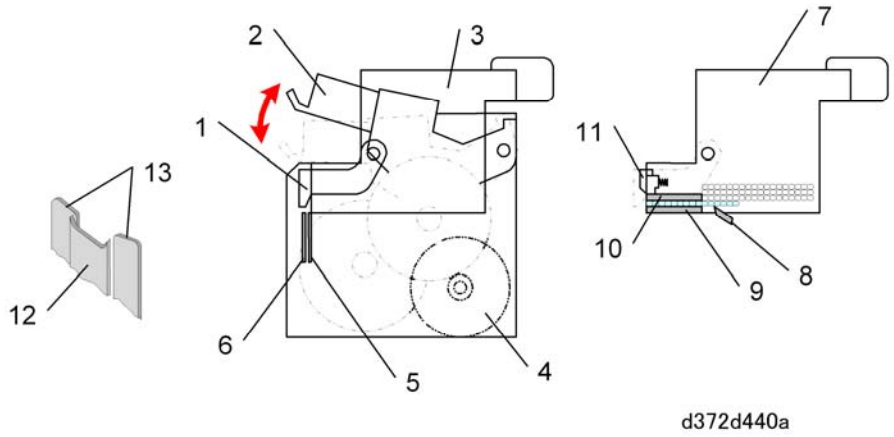


| | | | |
|---|---|---|---|
| 1. | Faceplate | 8. | Staple Supply Pawl |
| 2. | Clincher | 9. | Staple Sheet |
| 3. | Cartridge | 10. | Base |
| 4. | Stapler Motor | 11. | Plunger |
| 5. | Homing Plates | 12. | Driver Plate |
| 6. | Driver Plate | 13. | Homing Plates |
| 7. | Cartridge | | |

The stapler motor (4) drives both the driver plate (12) and homing plates (13) toward the clincher. The driver plate and homing plates separate and feed the staples to the clincher (2) that performs the stapling.

The pressure of the plunger (11) feeds the next staple for firing. A staple supply pawl below the staple sheet moves to the front and back to assist in staple supply. The plunger feeds only one staple at a time, but the staple supply pawl can feed up to 10 staples.

## 2.4.2 STAPLER MOVEMENT MOTOR INITIALIZATION

Initialization of the stapler unit position is determined by the state of the stapler HP sensor. One of the following sequences occurs at power on, depending on the state of the stapler HP sensor.

- Stapler HP sensor OFF

**Stapling**

The motor turns on and brings the stapler forward until the stapler HP sensor goes ON. Then the motor remains on to move the stapler an additional 1.2 mm, then stops. This is the home position.

- Stapler HP sensor ON
  The stapler movement motor turns on and moves the stapler to the rear until the stapler HP sensor goes OFF. The motor stays on to move the stapler 12 mm, then stops. Next, the motor turns on again and brings the stapler forward until the stapler HP sensor goes ON, the motor stays on to move the stapler 1.2 mm, then stops. This is the home position.

### 2.4.3 STAPLER ERRORS

A stapler position error can occur in two cases:

- Stapler HP sensor does not go OFF.
  The stapler HP sensor does not go OFF even after the stapler movement motor has been on long enough to move the stapler away from the home position.
- Stapler HP sensor does not go ON
  While the stapler is out of the home position, the stapler HP sensor does not go ON even after the stapler movement motor has been on long enough to move the stapler into the home position.
- Stapler is out of staples.
  At power on, if staples are not detected in the stapler, the staple detection sequence executes up to 10 times until "staples present" is detected. If staples cannot be detected after 10 attempts, then the staples out alert is issued.

When one of these errors occurs, the exciter current to the stapler motor is switched off. Both of the HP sensor errors described above are counted as the same error. In either case, the first occurrence of the error is considered a jam, and the second occurrence issues SC742 (Stapler Movement Motor Error).

To recover from an error:

- At the first occurrence of a stapler HP sensor error, removing the jam then opening and closing either the top cover or the stapler door triggers the initial check and restores normal operation if no problems are detected.
- At the second occurrence after SC742 is issued, cycling the main machine power off/on may restore full operation if no problems are detected.

# 2.5 PAPER OUTPUT

## 2.5.1 OVERVIEW

**Feed-Out Mechanism**

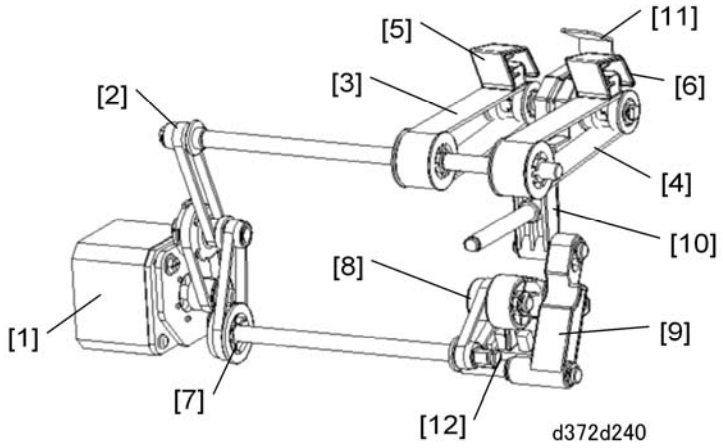


| | | | |
|---|---|---|---|
| 1. | Feed-Out Belt Motor | 7. | Mobile Fence Drive Shaft |
| 2. | Feed-Out Belt Drive Shaft | 8. | Mobile Fence Cam |
| 3. | Rear Feed-Out Belt | 9. | Mobile Fence Follower |
| 4. | Rear Feed-Out Belt Pawl | 10. | Mobile Fence Link and Slider |
| 5. | Front Feed-Out Belt | 11. | Mobile Fence |
| 6. | Front Feed-Out Belt Pawl | 12. | Feed-Out Belt HP Sensor |

The feed-out belt motor [1] drives the timing belt and shaft [2] that rotates the feed-out belts [3] and [4]. The rear pawl [5] and front pawl [6] attached to the rear and front belts push the stack out of the finisher after stapling.

The feed-out belt motor also drives the timing belt and shaft [7] that rotates the mobile fence cam [8]. The mobile fence follower [9] converts the rotary movement of the cam to rectilinear movement (left-to-right) and transmits this movement via the link/slider [10] to the mobile fence [11]. The mobile fence is moved forward to start pushing the stack out of the finisher. The pawls on the rapidly moving feed-out belt complete pushing the stack out of the finisher. After the cam releases the follower, a spring pulls the mobile fence back to its home position.

**Paper Output**

When the actuator attached to the mobile fence cam switches the feed-out belt HP sensor [12] ON, this stops the feed-out belt motor with the pawls at their home positions.

**Bottom Fences**

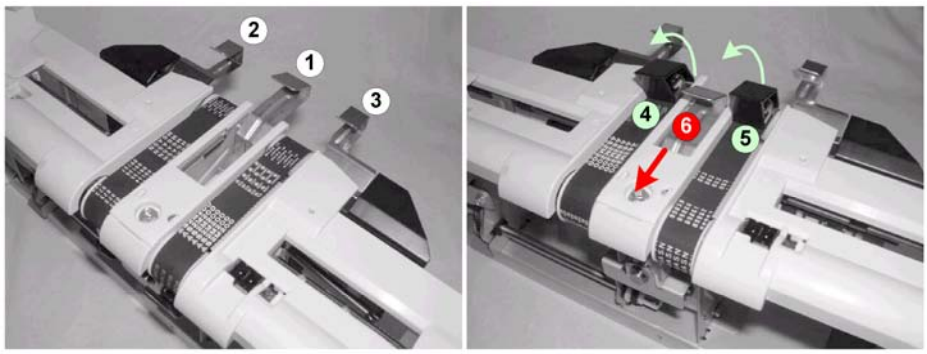


d372d901

There are three bottom fences. A mobile fence (1) resides between two stationary bottom fences (2) and (3). When the mobile fence (1) is at its home position, the positioning roller and return rollers feed the trailing edge of each sheet against these fences.

When the stack is ready to be moved to the output tray, the mobile fence (6) pushes the stack to the right. The rear pawl (4) and front pawl (5), mounted on the rear and front feed-out belts, swing up from below and push the stack onto the tray. The mobile fence (6) returns to its home position between the stationary bottom fences.

**Feed-Out Mechanism: Right and Front View**

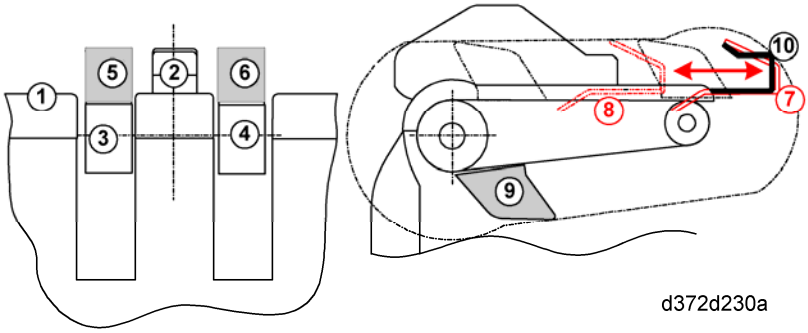


d372d230a

| | | | |
|---|---|---|---|
| 1. | Stapling Tray | 6. | Rear Feed-Out Belt Pawl |
| 2. | Mobile Fence | 7. | Mobile Fence HP |
| 3. | Front Feed-Out Belt | 8. | Mobile Fence (Forward Position) |
| 4. | Rear Feed-Out Belt | 9. | Feed-Out Pawls (HP) |
| 5. | Front Feed-Out Belt Pawl | 10. | Bottom Fences x2 |

In the left illustration, just before that stack is output:

- The stack is on the stapling tray (1).
- The mobile fence (2) has pushed the stack forward to start moving it out of the finisher.
- The front and rear feed-out belts (3) and (4) have rotated the front and rear pawls (5) and (6) behind the stack so they can push the stack out of the finisher.

In the right illustration, after stack output:

- The mobile fence (driven by its cam, follower, and lever below) moved from its home position (7) to (8) to start pushing the stack out of the finisher.
- The feed-out belt pawls pushed the stack out of the finisher then stopped at their home positions (9).
- A long spring pulled the mobile fence back to its home position between the stationary bottom fences (10)

## 2.5.2 FEED-OUT

The diagram below shows how the feed-out belt and mobile fence work together to push the stack to the output tray.

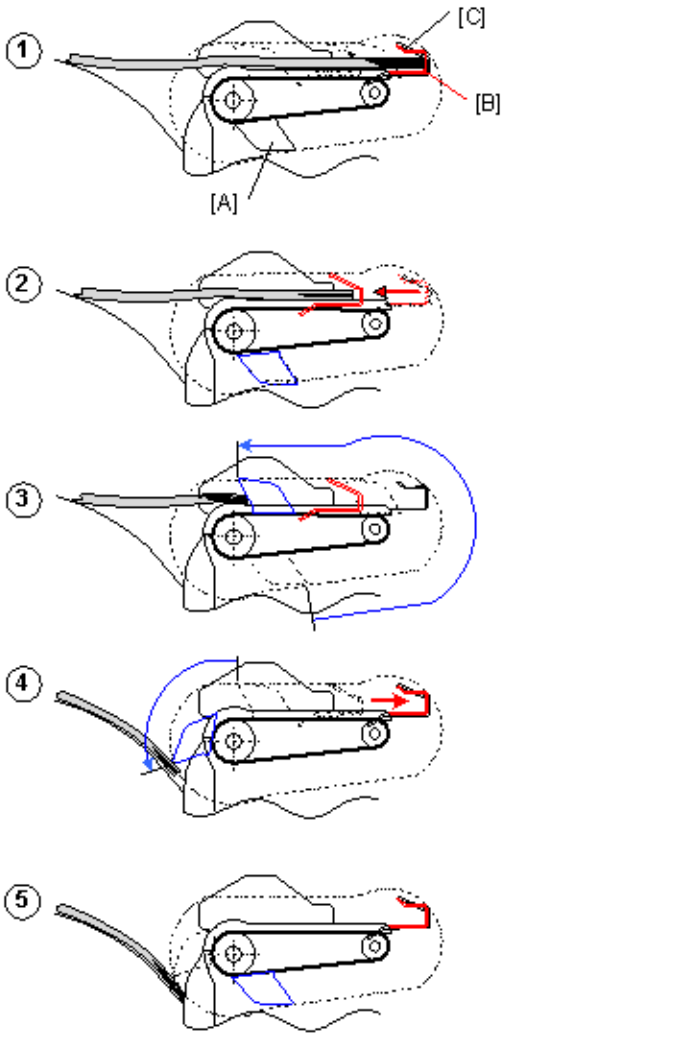


| | |
|---|---|
| ① | Document stacking has finished and the stack is ready to be output. The output belt pawls are at their home positions [A]. The mobile fence [B] is at its home position between the front and rear bottom fences [C]. |
| ② | The mobile fence pushes the stack to the right and stops. |
| ③ | The feed-out belt pawls rapidly swing up and push the stack toward the output tray. |
| ④ | The feed-out belt pawls push the stack onto the output tray. A spring (not shown) retracts the mobile fence. |

| | |
|---|---|
| ⑤ | The actuator on the mobile fence cam activates the feed-out belt pawl HP sensor. This switches the motor off and the pawls stop at the home position. |

## 2.5.3 FEED-OUT BELT INITIALIZATION

Initialization of the positions of the feed-out belt pawls at power on is determined by the state of the feed-out belt HP sensor. This operation does not affect the mobile fence because it is held in its home position by a spring.

One of the following sequences occurs at power on, depending on the state of the feed-out belt HP sensor.

- Feed-out belt HP sensor ON
  The feed-out belt motor switches on and rotates clockwise until the HP sensor goes OFF. The motor reverses for 50 ms until the HP sensor goes ON again and stops. This is the home position.
- Feed-out belt HP sensor OFF
  The feed-out belt motor rotates counter-clockwise until the HP goes ON and then stops. This is the home position.

## 2.5.4 FEED-OUT BELT ERRORS

A feed-out belt error can occur in two cases:

- The feed-out belt HP sensor does not go OFF even after the motor has started.
- The feed-out belt does not go ON after the feed-out belt motor has started at power on and the finisher is ready to operate.
- Stapler out of staples

When an error occurs, the feed-out belt motor is switched off.

Either of the errors caused by the states of the feed-out belt HP sensor is counted as the same error.

- The first occurrence of an error issues a paper jam alert.
- The second occurrence of an error issues an SC723 (Feed-out Belt Motor Error).

To recover from an error:

- At the first occurrence of the error after a paper jam error, opening and closing either the top cover or the stapler door triggers the initial check and restores normal operation if no problems are detected.
- At the second occurrence after SC723 is issued, cycling the main machine power off/on may restore full operation if no problems are detected.

## 2.5.5 FEED-OUT EXTENSION

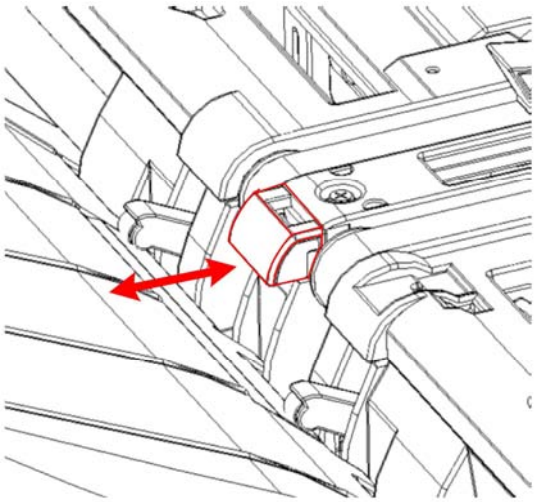

d372d380

A retractable extension is attached to the center of the stapling tray. The operator can pull it out manually if the trailing edges of the stacks are catching on the end fence and not falling straight down onto the tray.

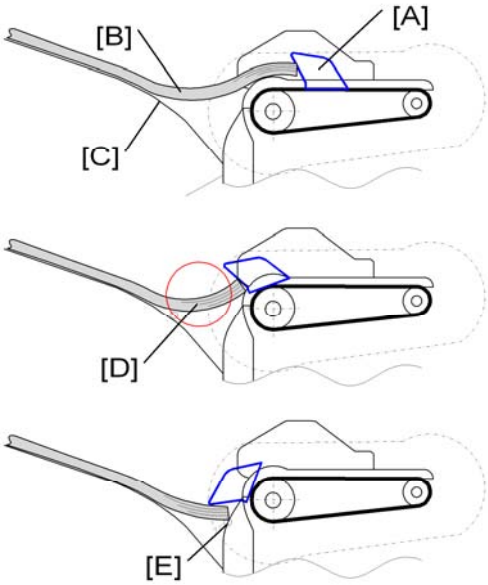


d372d391

When the feed-out belt pawls [A] push a stack of paper [B] onto the tray [C], a bend [D] forms at the trailing edge. With some types of paper (especially larger paper such as A3), this bend can cause the edge of the stack to catch on the end fence [E] when it falls into the tray.

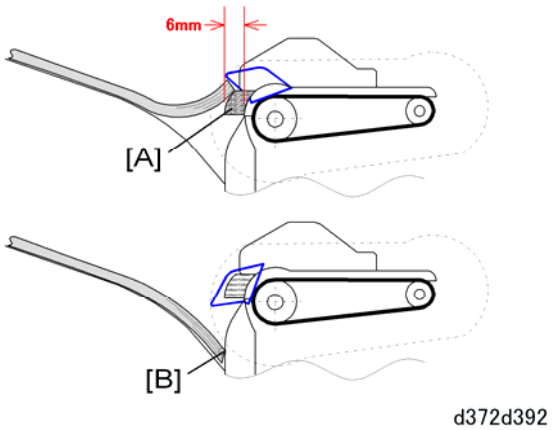


Pulling the stapling tray extension [A] out by hand extends by 6 mm the distance that the pawls must push the trailing edge of the stack. The extra 6 mm forces the edge of the stack to bend more so it will snap down with more force and not catch on the end fence. This prevents the trailing edge of the stack [B] from catching on the end fence when it falls into the tray.

# 2.6 TRAY OPERATION

## 2.6.1 OVERVIEW

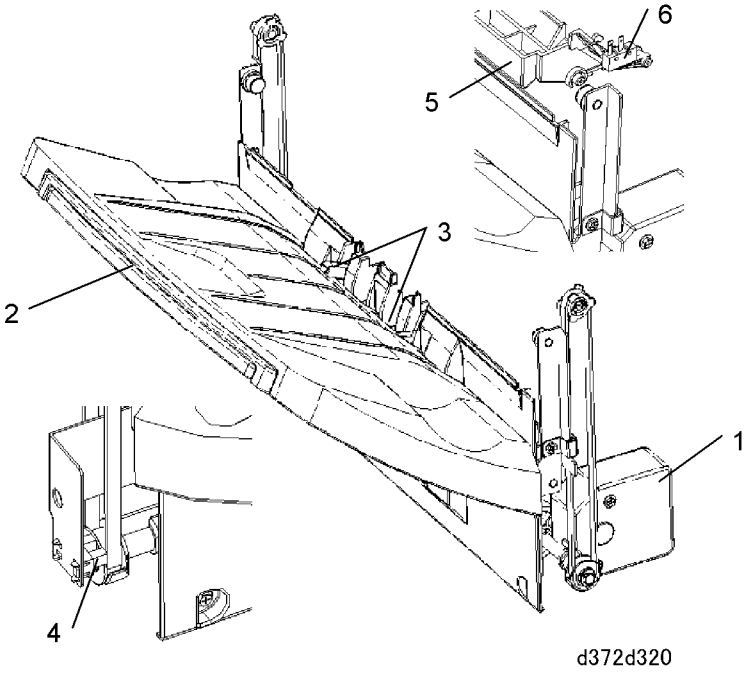


| | |
|---|---|
| 1. | Tray Lift Motor |
| 2. | Output Tray |
| 3. | Edge Depressors |
| 4. | Tray Full Sensor |
| 5. | Upper Limit Push-bar |
| 6. | Tray Upper Limit Switch |

The tray lift motor (1) raises and lowers the output tray (2).
The edge depressors (3) lightly press down on the trailing edges of stacks already on the tray to keep them down against the end fence.
When the actuator on the bottom of the rear rail switches the tray full sensor (4) ON, this means that the tray is at its lowest point and the tray is full.
If the tray becomes overloaded, the top of the stack pushes up the spring-loaded push-bar

(5). This will turn on the tray upper limit switch (6) and turn off the tray lift motor. This is a safety device to signal tray full in case the tray full sensor fails.

## 2.6.2 TRAY LIFT CONTROL

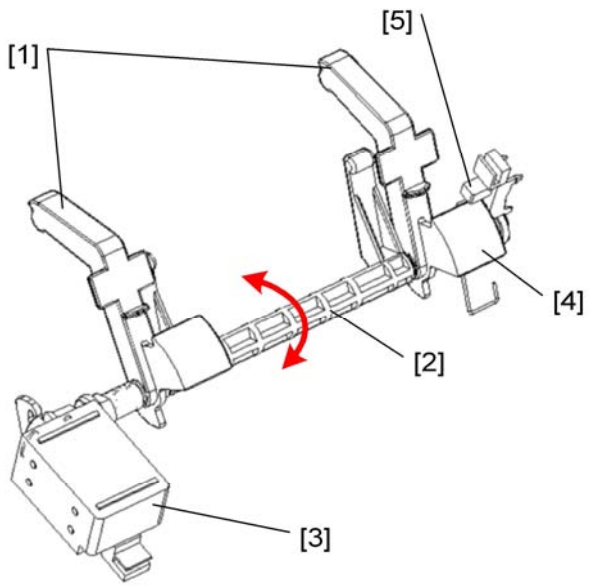


d372d340

| | |
|---|---|
| 1. | Edge Depressors |
| 2. | Rotating Shaft |
| 3. | Edge Depressor Solenoid |
| 4. | Actuator |
| 5. | Paper Height Sensor |

While the feed-out belt motor is running, the tray lift motor switches on (300 ms for shift mode, 500 ms for stapling mode), lowers the output tray, stops, then waits to receive the stack.

Just before a stack falls onto the output tray, the edge depressor solenoid (3) switches ON and retracts the edge depressors (1) away from the top of the stack already on the tray so that the next stack can fall freely.

The feed-out belt motor stops immediately after the stack has fallen between the side fences. The edge depressor solenoid switches OFF, and the edge depressors fall onto the trailing edge of the stack against the end fence.

**Tray Operation**

The edge depressors touch the top of the stack, and they are connected to the paper height sensor [5], so this action checks if it is necessary to move the tray up or down.

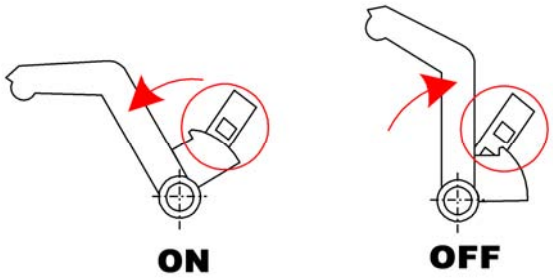


- After 200 ms if the paper height sensor is **ON**, the tray lift motor switches ON and raises the tray.
- If the paper height sensor is **OFF,** the tray lift motor lowers the tray until the paper height sensor switches ON, pauses for 100 ms, switches on again briefly to raise tray to the prescribed position to receive the next stack.

The diagram below shows how the feed-out belt pawls, output tray, and edge depressors operate together.

**Stack Output to Tray**

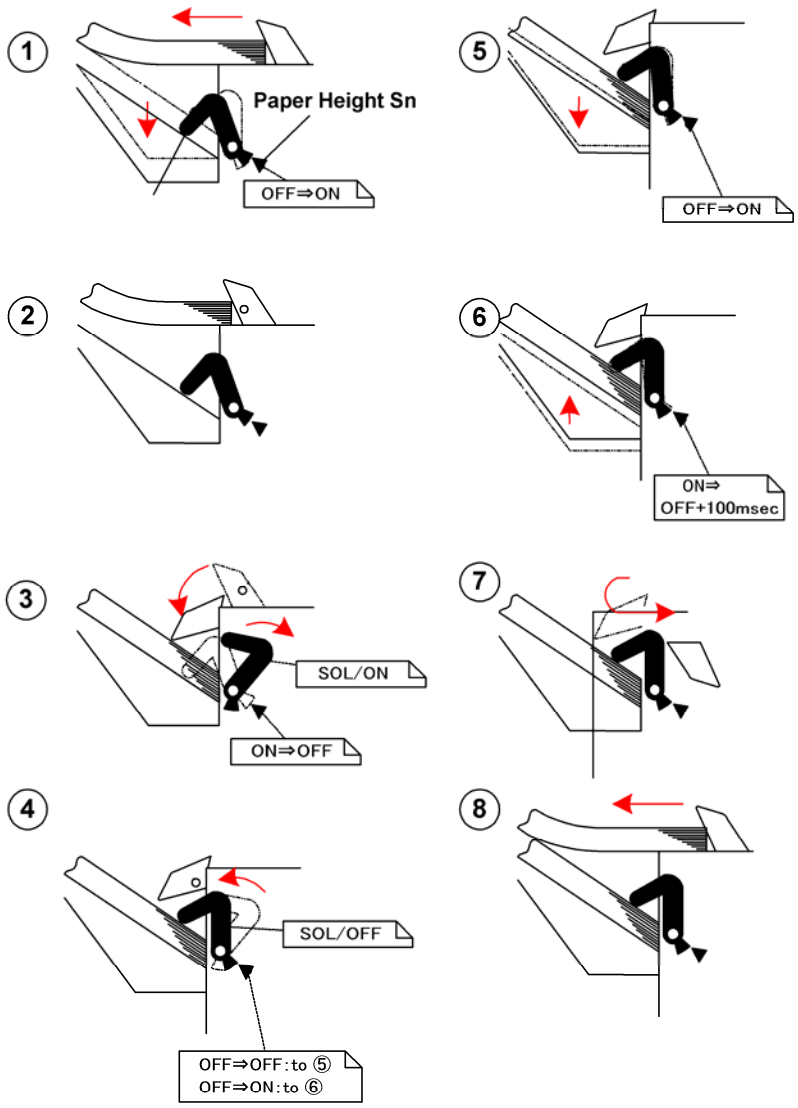


d372d360

| | |
|---|---|
| ① | The feed-out motor switches on and starts to move the feed-out belts and pawls, pushing the stack toward the output tray. The tray motor switches on and lowers the tray until the paper height sensor switches on. |
| ② | The motor stops briefly to stop the pawls. |

**Tray Operation**

| | |
|---|---|
| ③ | The motor starts, and just as the pawls start to push the stack onto the tray the edge depressor solenoid switches on and retracts the edge depressors |
| ④ | The stack is on the tray. The solenoid switches off, and the depressors move forward and press down lightly on the trailing edge of the stack.<br>▪ If the paper height sensor is OFF, go to ⑤<br>▪ If the paper height sensor is ON, go to ⑥ |
| ⑤ | The tray lift motor switches on, lowers the tray, and then stops when the paper height sensor goes ON. |
| ⑥ | The tray lift motor reverses for 100 ms to raise the tray to the start position. |
| ⑦ | The pawls move to their home positions and stop. |
| ⑧ | The sequence starts again with the next finished stack,. |

## 2.6.3 TRAY INITIALIZATION

The following sequence occurs at power on depending on the states of the paper height sensor and tray full sensor:

| | |
|---|---|
| ① | The edge depressor solenoid switches from ON to OFF. |
| ② | ▪ If paper height sensor ON, then go to ③.<br>▪ Paper height sensor OFF.<br>If the tray full sensor is ON and the paper height sensor is OFF, this signals that the output tray is full. Removing the paper from the tray will switch the paper height sensor ON. The tray lift motor switches on, lowers the tray, reverses for briefly to raise the tray to the start position, then switches OFF. |
| ③ | The tray lift motor continues to lift the tray until the paper height sensor goes OFF, continues to run 100 ms, and stops. |

## 2.6.4 TRAY LIFT ERRORS

### *Tray Lift Motor Error*

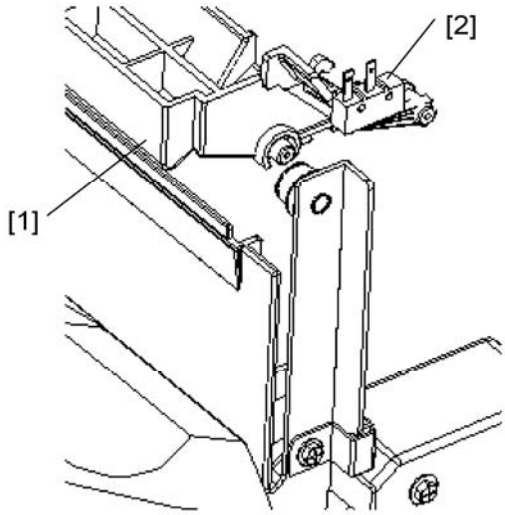


d372d320a

If the tray becomes overloaded and the paper pushes and raises the push-bar [1], this will switch ON the upper limit switch [2] (a push-switch). Activating this switch switches off the tray lift motor. This is a backup device that will switch off the tray lift motor if the tray full sensor or paper height sensors fail.

The table below shows how the state of the two sensors and one switch signal an error.

| Tray Upper Limit SW | Tray Full Sn | Paper Hgt Sn | What Happens |
|---|---|---|---|
| ON | OFF | OFF | Tray Full. One or both sensors has failed. |
| OFF | ON | OFF | Tray Full |
| OFF | ON | ON | Lift motor starts to raise tray |
| OFF | OFF | OFF | Lift motor starts to lower tray |
| OFF | OFF | ON | Lift motor starts to raise tray. |

The machine issues a tray-full alert when the tray becomes full:

- Tray full sensor ON
  The tray has reached its lowest position.

**Tray Operation**

- Paper height sensor OFF (full upright)

  The paper on the tray has pushed the edge depressors to the full upright position. Normally, removing the paper from the tray restores normal operation. The actuator falls and the paper height sensor switches ON. This signals the lift motor to raise the tray to the start position.

An error will occur if an abnormal condition exists:

- After the paper height sensor switches ON and the tray lift motor raises the tray, if paper height sensor does not go OFF after 20 sec., this signals an error and the tray lift motor will switch OFF.
- With the paper height sensor OFF and the tray full sensor OFF, the tray lift motor lowers the tray. The tray lift motor will switch off if the paper height sensor does not go ON within 3 sec.

These two errors are counted as the same error. The first occurrence of the error is considered a jam, and at the second occurrence SC750 (Tray Lift Motor Error) is issued.

To recover from an error:

- At the first occurrence of the error after a paper jam error, opening and closing either the top cover or the stapler door triggers the initial check and restores normal operation if no problems are detected.
- At the second occurrence after SC750 is issued, cycling the main machine off/on may restore full operation if no problems are detected.

## *Edge Depressor Solenoid Error*

At power on, or while the stack starts being output to the tray (the solenoid starts to go OFF), if the paper height sensor remains OFF this indicates a solenoid error. When this error occurs:

- All motors switch off.
- The error is logged.

The first occurrence is considered a jam, and the second occurrence causes SC751 (Edge Depressor Solenoid).

To recover from an error:

- At the first occurrence of the error after a paper jam error, opening and closing either the top cover or the stapler door triggers the initial check and restores normal operation if no problems are detected.
- At the second occurrence after SC750 is issued, cycling the main machine off/on may restore full operation if no problems are detected.

# 2.7 ELECTRICAL COMPONENTS

## 2.7.1 COMPONENT LAYOUT

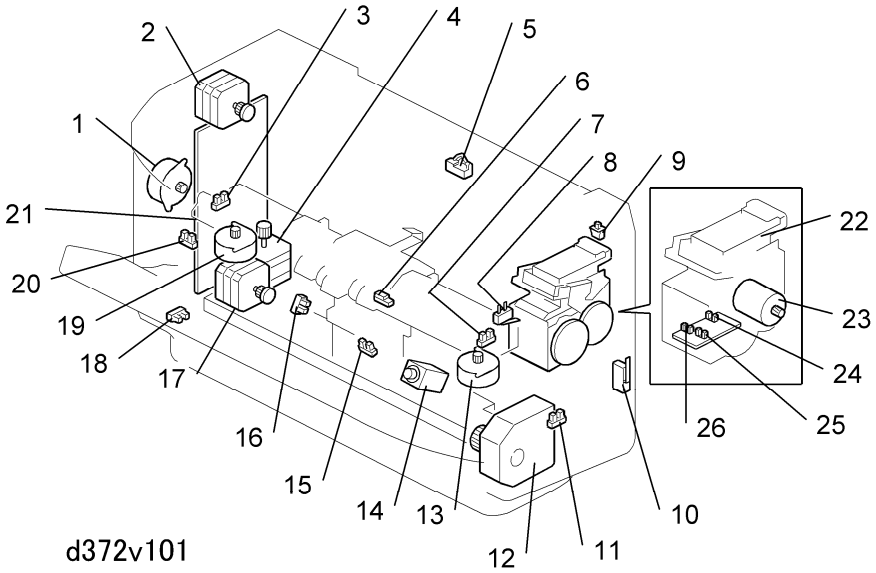


| | | | |
|---|---|---|---|
| 1. | Positioning Roller Motor | 14. | Stack Depressor Solenoid |
| 2. | Transport Motor | 15. | Feed-Out Belt HP Sensor |
| 3. | Rear Fence HP Sensor | 16. | Paper Height Sensor |
| 4. | Stapler Movement Motor | 17. | Feed-Out Belt Motor |
| 5. | Entrance Sensor | 18. | Output Tray Full Sensor |
| 6. | Stapling Tray Paper Sensor | 19. | Rear Fence Motor |
| 7. | Front Fence HP Sensor | 20. | Positioning Roller HP Sensor |
| 8. | Tray Upper Limit Switch | 21. | Main Board |
| 9. | Top Cover Switch | 22. | Stapler |
| 10. | Stapler Door Switch | 23. | Stapler Motor |
| 11. | Stapler HP Sensor | 24. | Staple Cartridge Set Sensor |
| 12. | Tray Lift Motor | 25. | Stapler Hammer HP Sensor |
| 13. | Front Fence Motor | 26. | Staple End Sensor |

## 2.7.2 SUMMARY OF ELECTRICAL COMPONENTS

| Motors | | |
|---|---|---|
| M1 | Feed-Out Belt Motor | Drives the two feed-out belts (1 pawl each). The pawls push the finished stack out of the finisher. |
| M2 | Front Fence Motor | Moves the front fence to the back and front. |
| M3 | Positioning Roller Arm Motor | Lowers and raises the positioning roller arm and positioning roller. |
| M4 | Rear Fence Motor | Moves the rear fence to the front and back. |
| M5 | Stapler Movement Motor | Moves the stapler to the front and back. |
| M6 | Transport Motor | Drives all the rollers in the finisher: entrance roller, positioning roller, return rollers, exit roller |
| M7 | Tray Lift Motor | Raises and lowers the output tray. |
| M8 | Stapler Motor | The motor inside the stapler that drives staple supply and stapling. |

| Board | | |
|---|---|---|
| PCB1 | Main Board | Controls operation of the finisher. DIP switches can be changed to adjust the positions of the front and rear side fences. |

| Sensors | | |
|---|---|---|
| S1 | Entrance Sensor | Detects the leading edge of the paper when it enters the finisher. Readings of this sensor are used for timing of finisher operation. Also detects jams. |
| S | Feed Out Belt HP Sensor | Detects the HP of the feed-out belt pawls on the two feed-out belts (one pawl on each belt). |

| Sensors | | |
|---|---|---|
| S2 | Front Fence HP Sensor | Detects the HP of the front fence at the front of the finisher. |
| S3 | Output Tray Full Sensor | Located at the bottom left corner of the finisher. When the actuator on the tray rail switches this sensor ON, this signals tray full. |
| S4 | Paper Height Sensor | Used to monitor the positions of the edge depressors that press down on the trailing edge of the stack at the end fence. When the top of the stack pushes the depressors up, this switches the sensor OFF and signals the tray lift motor to lower the tray. |
| S5 | Positioning Roller HP Sensor | Detects the HP of the positioning roller when it is up. |
| S6 | Rear Fence HP Sensor | Detects the HP of the rear fence at the back of the finisher. |
| S7 | Stapler HP Sensor | Detects HP of the stapler at the front of the finisher. |
| S8 | Stapling Tray Paper Sensor | Detects paper on the stapling tray, |

| Solenoid | | |
|---|---|---|
| SOL | Stack Depressor Solenoid | When a stack is output, the tray lift motor lowers the tray slightly. At this time, the stack depressor solenoid switches ON and retracts the edge depressors briefly so that the trailing edge of the stack can fall onto the tray. The solenoid then switches OFF and lowers the arms against the trailing edge of the stack to keep it down against the end fence. |

**Electrical Components**

| Switches | | |
|---|---|---|
| SW1 | Stapler Door Switch | Detects when the stapler top cover is open or closed. |
| SW2 | Top Cover Switch | Detects when the top cover is opened or closed. |
| SW3 | Tray Upper Limit Switch | If the tray becomes full, the top of the stack will push up a plate that activates this switch and switches off the finisher. This is a backup feature that will shut down operation if the tray full sensor or paper height sensor fails with the output tray full. |

| Other | | |
|---|---|---|
| Stapler | Stapler Unit | Staples sheets stacked on the stapling tray. |

## 2.7.3 TIMING CHARTS

The first flowchart below is the operational timing chart for shift mode, the second chart is for stapling mode.

**Shift Mode**

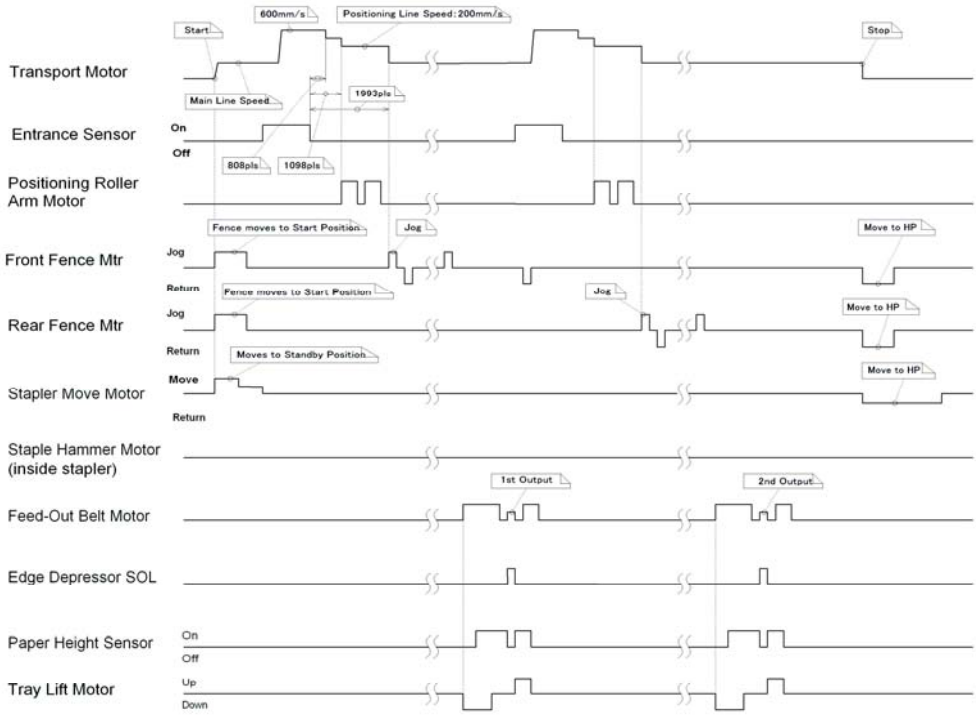


d372d420

500-Sheet Finisher D372

**Electrical Components**

**Staple Mode: Rear/Oblique**

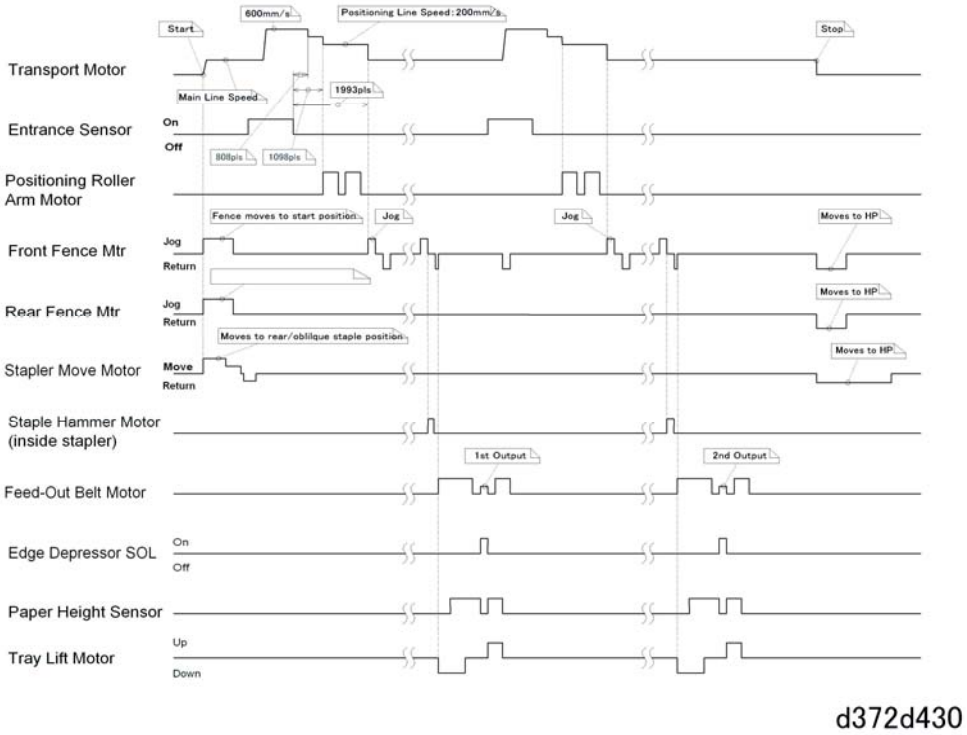


## 2.7.4 ERROR LIST

Here is a comprehensive list of finisher errors.

**Solution Key**

| Symbol | Solution |
|---|---|
| ① | 1. Open top cover (or stapler door).<br>2. Remove jammed paper (or staple).<br>3. Close the top cover (or stapler door). |
| ② | **1st Occurrence (Jam Error):**<br>1. Open top cover (or stapler door).<br>2. Remove jammed paper (or staple).<br>3. Close the top cover (or stapler door).<br>**2nd Occurrence (SC Code):**<br>1. Cycle the machine power off/on<br>2. If this does not solve the problem, refer to Section "4. Troubleshooting".<br>3. Look up the SC code in table and do the service procedure. |

| No. | Error | Problem/Solution |
|---|---|---|
| 1 | Entrance sensor | **Problem:**<br>Lag errorOccurs during paper feed.<br>A paper exit signal (ON) was received from the main machine, but the entrance sensor did not switch ON after the finisher transport motor ran long enough to feed paper 500 mm.<br>**Solution:** ① |
| 2 | Entrance sensor | **Problem:**<br>Late errorOccurs during paper feed.<br>The entrance detected the paper, but the entrance sensor did not go OFF after the finisher transport motor ran long enough to feed 1.5 times the length of the paper size signaled by the main machine.<br>**Solution:**① |
| 3 | Paper in paper path | **Problem:**<br>Occurs at power on, or after the top cover or stapler door has been closed.<br>After the top or stapler cover switch is closed, the stapler cover switch goes OFF but the entrance sensor remains ON for longer than 50 ms.<br>**Solution:** ① |
| 4 | No paper present | **Problem:**<br>Occurs during stapling, stapling mode WAIT.<br>The paper sensor on the stapling tray remains OFF for more than 50 ms.<br>**Solution:** No action required. |
| 5 | Positioning roller motor error | **Problem:**<br>Occurs during initialization or during operation of the positioning roller motor.<br>▪ During initialization or while the positioning roller arm was being lowered, the HP sensor remained ON did |

**Electrical Components**

| No. | Error | Problem/Solution |
|---|---|---|
| | | not go OFF within the prescribed time.<br>▪ During initialization, the positioning roller HP sensor remained OFF did not go ON within the prescribed time.<br>▪ When the positioning roller arm is raised from the down position, the HP sensor does not go ON even after the positioning roller motor remained on for 450 pulses.<br>**Solution:** ② |
| 6 | Front side fence motor error | **Problem:**<br>Occurs at power on, when the paper moves to the start position in the finisher, or in standby mode.<br>▪ The front side fence HP sensor did not switch from ON to OFF after the front side fence motor remained on for 50 pulses to move the fence toward the rear.<br>▪ The front side fence HP sensor did not switch from OFF to ON after the front side fence motor remained on for 420 pulses.<br>**Solution:** ② |
| 7 | Rear side fence motor error | **Problem:**<br>Occurs at power on, when the paper moves to the start position in the finisher, or in standby mode.<br>▪ The rear side fence HP sensor did not switch from ON to OFF after the rear side fence motor remained on for 50 pulses to move the fence forward.<br>▪ The front side fence HP sensor did not switch from OFF to ON after the front side fence motor remained on for 420 pulses to move the fence toward the rear.<br>**Solution:** ② |
| 8 | Feed-out belt motor | **Problem:**<br>Occurs at initialization or during feed-out belt operation.<br>▪ The feed-out belt HP sensor did not switch from ON to |

| No. | Error | Problem/Solution |
|---|---|---|
| | | OFF after the feed-out belt motor ran for 100 pulses.<br>▪ The feed-out belt HP sensor did not switch from OFF to ON after the feed-out belt motor ran for 1000 pulses.<br>**Solution:** ② |
| 9 | Stapler movement motor error 1 | **Problem:**<br>Occurs at initialization or while the paper is being fed to the start position in the finisher.<br>▪ The stapler HP sensor did not switch from ON to OFF after the stapler movement motor ran for 200 pulses.<br>▪ The stapler HP sensor did not switch from OFF to ON after the stapler movement motor ran for 5600 pulses.<br>**Solution:** ② |
| 10 | Stapler motor error | **Problem:**<br>Occurs during staple supply to the stapler.<br>The stapler operation (stapling) did not end after 600 ms.<br>A staple jam can also cause this error. |
| 11 | Tray lift motor error | **Problem:**<br>Occurs at initialization, after return to standby, or during feed-out belt operation.<br>▪ The paper height sensor did not go OFF after the tray lift motor ran for 3 sec. to lower the tray.<br>▪ The paper height sensor did not go OFF after the tray lift motor ran for 20 sec. to raise the tray.<br>**Solution:** ② |
| 12 | Edge depressor solenoid | **Problem:**<br>Occurs at initialization or during feed-out belt operation.<br>▪ The paper height sensor remained ON after the solenoid went OFF.<br>**Solution:** ② |
| 13 | Tray full sensor | **Problem:** |

**Electrical Components**

| No. | Error | Problem/Solution |
|---|---|---|
| | | The tray full sensor went ON with the edge depressor solenoid OFF and paper height sensor OFF.<br>**Solution**: Tray full, remove paper. |
| 14 | Staple out | **Problem:**<br>Occurs during standby or during stapling.<br>▪ The staple near-end sensor went ON, or during staple supply the self-priming sensor did not go ON, even after 10 attempts to supply more staples to the stapler.<br>**Solution:** Replace the empty staple cartridge. |
| 15 | Top cover open | **Problem:**<br>The top cover remained open longer than 2 ms.<br>**Solution:** Close the top cover. |
| 16 | Stapler cover open | **Problem:**<br>The stapler cover remained open longer than 2 ms.<br>**Solution:** Close the stapler cover. |
| 17 | Tray upper limit switch is ON | **Problem:**<br>The tray upper limit switch remained on longer than 2 ms.<br>**Solution**: Before determining that an error has occurred:<br>▪ Lower the safety lever.<br>▪ Cycle the machine power off/on |
| 18 | System error | **Problem:**<br>An abnormal condition was detected and existed longer than 60 sec.<br>**Solution: DFU** |
| 19 | Exceeded system limitation | **Problem:**<br>Occurs when the number of command requests received has exceeded the limit. The entrance detected the paper, but the entrance sensor did not go OFF after the finisher transport motor ran long enough to feed 1.5 times the length of the paper size signaled by the main machine. |

| No. | Error | Problem/Solution |
|---|---|---|
| | | **Solution: DFU** |
| 20 | Abnormal data transfer | **Problem:**<br>A problem has been detected at ASAP during data transmission.<br>**Solution:** ① |

# 3. SPECIFICATIONS

## 3.1 SPECIFICATIONS

| | | | | |
|---|---|---|---|---|
| **Target Line Speed** | 77 mm/sec. to 205 mm/sec | | | |
| **Target CPM** | 35 cpm | | | |
| **Face-down Output Size** | 12"x18", A3 SEF to A6 SEF, DLT to HLT SEF<br>Shift sizes: A3 SEF to B5 SEF<br>A5, B6, A6 SEF labels possible | | | |
| **Paper Thickness** | 52 g/m$^2$ (45 K) to 157 g/m$^2$ (135 K)<br>Up to 253 g/m$^2$ (220K) without shift | | | |
| **Stapling** | | | | |
| Stack Height for Stapling | 50 sheets: A4, LT and smaller<br>30 sheets: B4, LG and larger | | | |
| Size | A3 SEF to B5 SEF (can be mixed if same width) | | | |
| Stack Thickness | 64g/m$^2$ (45 K) to 157 g/m (135 K) | | | |
| Stapling Positions | Front/Oblique: 1, Front/Parallel: 1<br>Rear/Oblique: 1, Rear/Parallel: 1, 2 locations | | | |
| **Output Tray Capacity** | | | | |
| Non-staple Mode | 500 sheets: A4, LT and smaller | | | |
| Staple Mode | 250 sheets: B4, LG and larger<br>Stack Size (Stapling) | | Stacks | Size |
| | 2 to 9 Sheets | | 55 to 46 | A4, B5, LT LEF |

| | | | | |
|---|---|---|---|---|
| | 10 to 50 Sheets | | 45 to 10 | |
| | 2 to 9 Sheets | | 55 to 27 | A4, B5, LT SEF |
| | 10 to 50 Sheets | | 25 to 8 | |
| | 2 to 9 Sheets | | 55 to 27 | A3, B4, DLT, LG |
| | 10 to 30 Sheets | | 25 to 8 | |
| | | | | |
| **Stacking** | | Non-Stapling Mode | Vertical: 15 mm or less | |
| | | | Horizontal: 15 mm or less | |
| **Jogging Precision** | | | | |
| 2 to 30 Sheets | | 2 mm | | |
| 31 to 50 Sheets | | 3 mm | | |
| **Dimensions (w x d x h)** | | 396 x 551 x 276 mm (15.6 x 21.7 x 10.9 in.) | | |
| **Weight** | | 12 kg (26.4 lb.) | | |

# BRIDGE UNIT BU3030

# D386

| D386 BRIDGE UNIT BU3030 | | |
|---|---|---|
| **Page** | **Date** | **Added/Updated/New** |
| | | None |

# BRIDGE UNIT BU3030 (D386)

## TABLE OF CONTENTS

**1. REPLACEMENT AND ADJUSTMENT ..... 1**
1.1 BRIDGE UNIT CONTROL BOARD.....1
1.2 BRIDGE UNIT DRIVE MOTOR.....2
1.3 TRAY EXIT SENSOR .....3
1.4 RELAY SENSOR .....4

**2. DETAILS ..... 5**
2.1 MECHANICAL COMPONENT LAYOUT .....5
2.2 DRIVE LAYOUT.....6
2.3 ELECTRICAL COMPONENT LAYOUT .....7
2.4 ELECTRICAL COMPONENT DESCRIPTION .....8
2.5 JUNCTION GATE MECHANISM .....9

# Read This First

## Safety and Symbols

### Replacement Procedure Safety

**⚠CAUTION**

- Turn off the main power switch and unplug the machine before beginning any of the replacement procedures in this manual.

When taking apart the bridge unit, first take the unit out of the copier.

Symbols Used in this Manual

This manual uses the following symbols.

☛: See or Refer to

: Screws

: Connector

: Clip ring

: E-ring

# 1. REPLACEMENT AND ADJUSTMENT

## 1.1 BRIDGE UNIT CONTROL BOARD

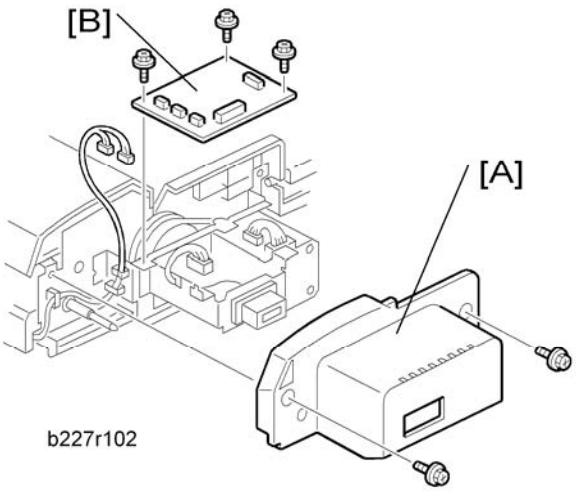


1. Bridge unit (☛ "Installation Procedure" in the base copier manual)
2. Rear cover [A] (🔩 x 2)
3. Bridge unit control board [B] (🔩 x 3, ✋ x 4)

# 1.2 BRIDGE UNIT DRIVE MOTOR

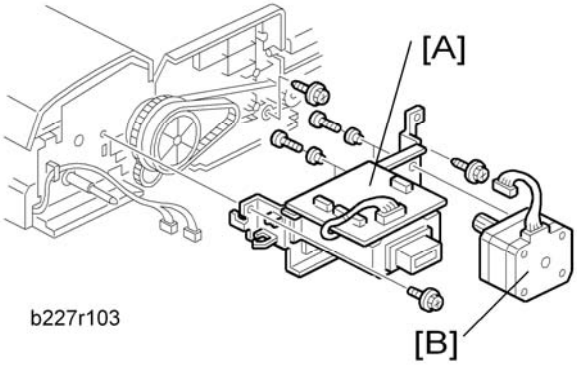


1. Bridge unit (☛ "Installation Procedure" in the base copier manual)
2. Rear cover (☛ "Bridge Unit Control Board")
3. Bracket [A] (🔩 x 3, ✋ x 2)
4. Bridge unit drive motor [B] (🔩 x 4, ✋ x 1)

## 1.3 TRAY EXIT SENSOR

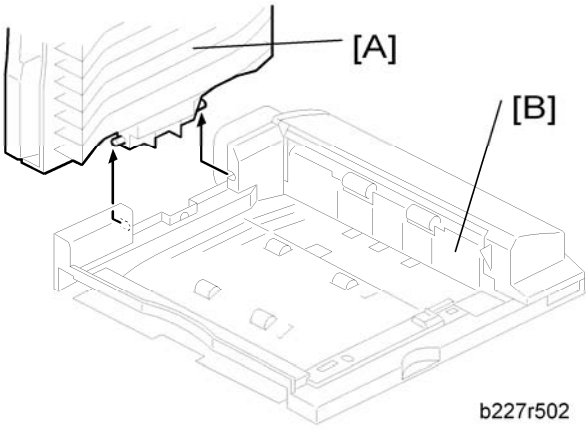


1. Bridge unit (☛ "Installation Procedure" in the base copier manual)
2. Rear cover (☛ "Bridge Unit Control Board")
3. Paper tray [A]
4. Exit guide [B] (🖉 x 1)

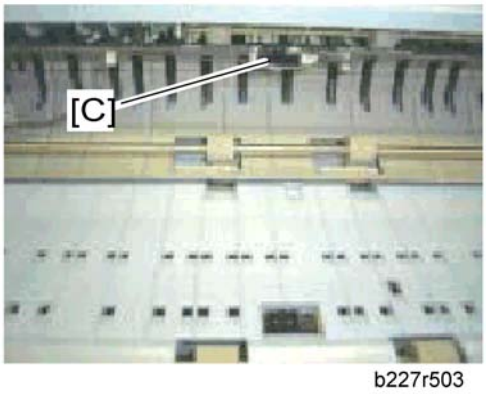


5. Tray exit sensor [C] (🖹 x 1)

# 1.4 RELAY SENSOR

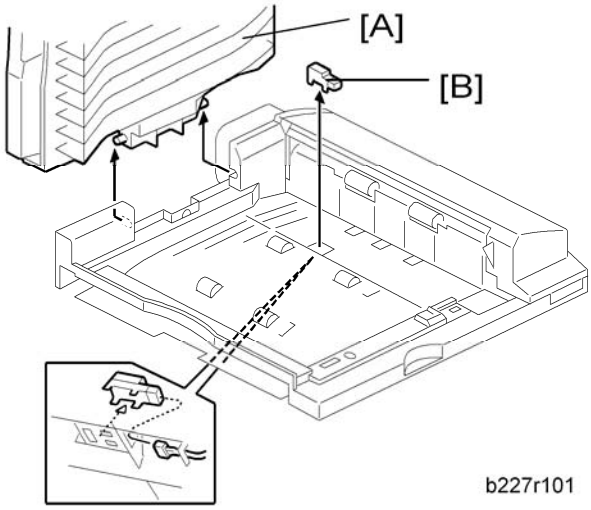


1. Bridge unit (☛ "Installation Procedure" in the base copier manual)
2. Paper tray [A]
3. Relay sensor [B] (☶ x 1)

# 2. DETAILS

## 2.1 MECHANICAL COMPONENT LAYOUT

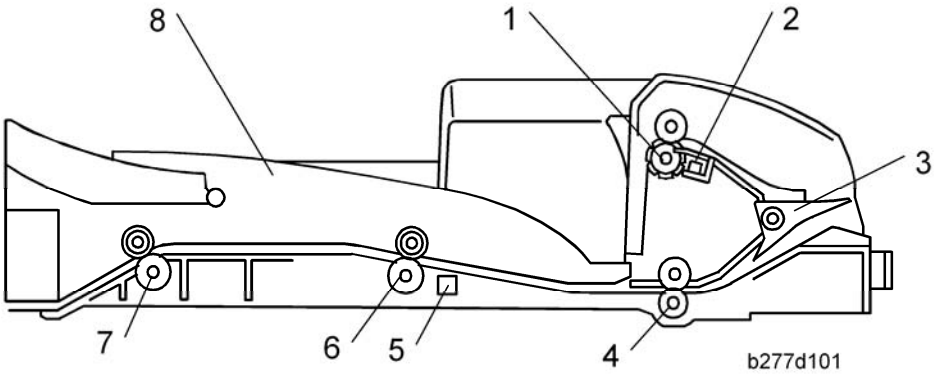


| | |
|---|---|
| 1. Upper Exit Roller | 5. Relay Sensor |
| 2. Tray Exit Sensor | 6. 2nd Transport Roller |
| 3. Junction Gate | 7. Left Exit Roller |
| 4. 1st Transport Roller | 8. Paper Tray |

## 2.2 DRIVE LAYOUT

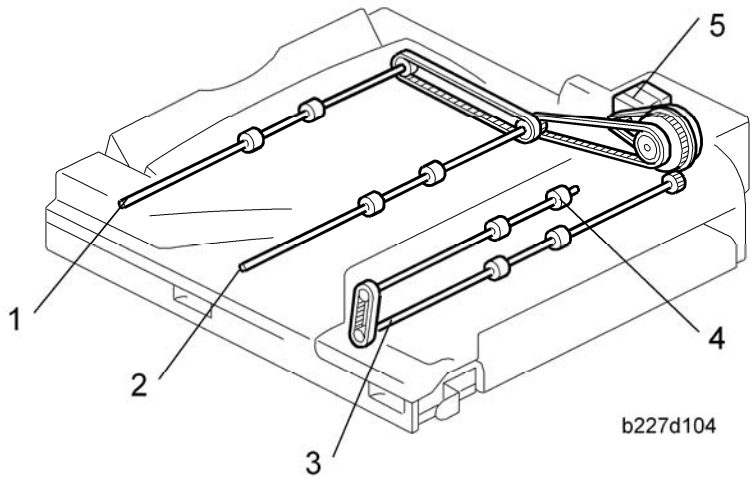


1. Left Exit Roller
2. 2nd Transport Roller
3. 1st Transport Roller
4. Upper Exit Roller
5. Bridge Unit Drive Motor

## 2.3 ELECTRICAL COMPONENT LAYOUT

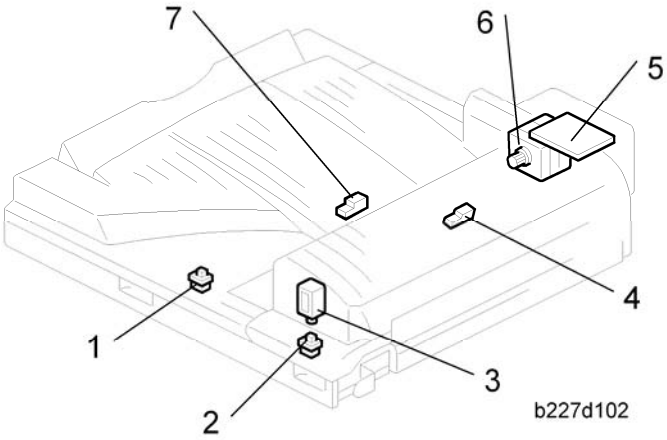


1. Left Guide Switch
2. Right Guide Switch
3. Junction Gate Solenoid
4. Tray Exit Sensor
5. Bridge Unit Control Board
6. Bridge Unit Drive Motor
7. Relay Sensor

## 2.4 ELECTRICAL COMPONENT DESCRIPTION

| Symbol | Name | Function | Index No. |
|---|---|---|---|
| **Motors** | | | |
| M1 | Drive Motor | Drives the bridge unit. | 6 |
| **Sensors** | | | |
| S1 | Tray Exit | Checks for misfeeds. | 4 |
| S2 | Relay | Checks for misfeeds. | 7 |
| **Switches** | | | |
| SW2 | Right Guide | Detects when the right guide is opened. | 2 |
| SW3 | Left Guide | Detects when the left guide is opened. | 1 |
| **Solenoids** | | | |
| SOL1 | Junction Gate | Moves the junction gate to direct the paper to the upper tray (on top of the bridge unit) or to the finisher. | 3 |
| **PCBs** | | | |
| PCB1 | Bridge Unit Control Board | Controls the bridge unit. | 5 |

## 2.5 JUNCTION GATE MECHANISM

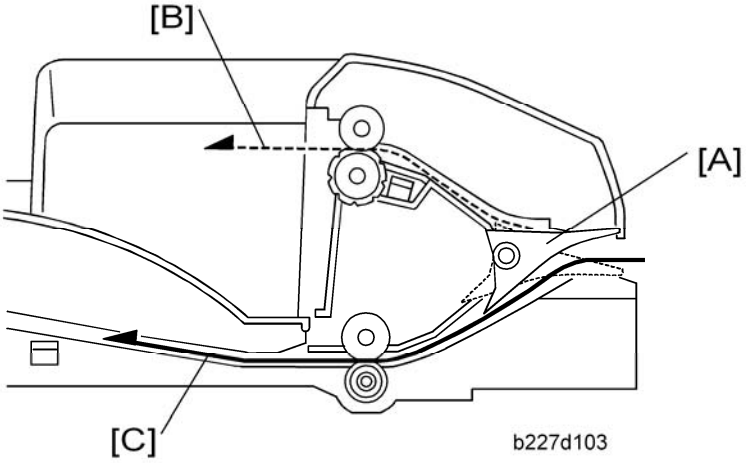


The junction gate [A] directs any paper reaching the bridge unit to either the upper tray (on top of the bridge unit) or to the finisher, depending on which has been selected.
If the junction gate solenoid has been activated, the junction gate [A] points downward and directs the paper to the upper tray [B] (dotted line path in illustration). When the solenoid is off, the junction gate points upward and the paper is fed out to the finisher [C] by the transport and left exit rollers (solid line).

# PAPER FEED UNIT PB3080

# (D387)

| D387 PAPER FEED UNIT PB3080 | | |
|---|---|---|
| **Page** | **Date** | **Added/Updated/New** |
| | | None |

# PAPER FEED UNIT PB3080 (D387)

# TABLE OF CONTENTS

**1. REPLACEMENT AND ADJUSTMENT .....1**
1.1 REAR COVER ..... 1
1.2 MOTORS, CLUTCH AND MAIN BOARD..... 2
1.2.1 LIFT MOTOR ..... 2
1.2.2 PAPER FEED CLUTCH..... 3
1.2.3 PAPER FEED MOTOR ..... 3
1.2.4 MAIN BOARD ..... 4
1.3 PAPER FEED UNIT ..... 5
1.4 ROLLERS AND SENSORS ..... 6
1.4.1 PICK-UP, PAPER FEED AND SEPARATION ROLLERS..... 6
1.4.2 LIFT, PAPER END, AND RELAY SENSORS ..... 7

# Read This First

## Safety and Symbols

### Replacement Procedure Safety

**⚠CAUTION**

- Turn off the main power switch and unplug the machine before beginning any of the replacement procedures in this manual.

### Symbols Used in this Manual

This manual uses the following symbols.

☛: See or Refer to

: Screws

: Connector

: Clip ring

: E-ring

# 1. REPLACEMENT AND ADJUSTMENT

## 1.1 REAR COVER



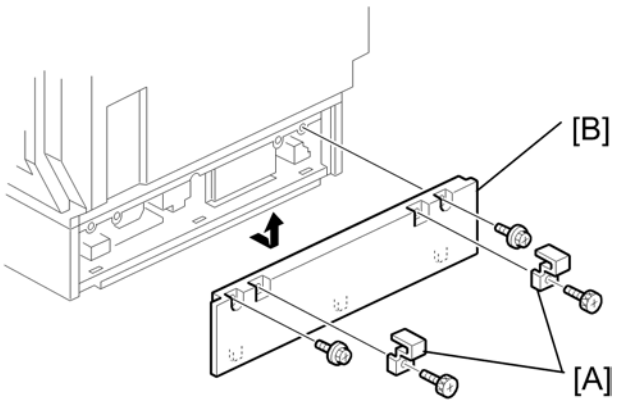


g832r105

1. Securing brackets [A] (🖉 x 1 each)
2. Rear cover [B] (🖉 x 2)

# 1.2 MOTORS, CLUTCH AND MAIN BOARD

## 1.2.1 LIFT MOTOR

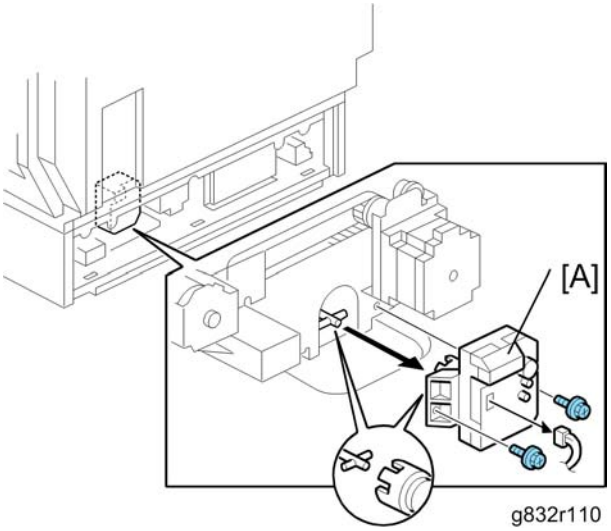


1. Rear cover (☛ p.1 "Rear Cover")
2. Lift motor [A] (🔩 x 2, 🔌 x 1)

## 1.2.2 PAPER FEED CLUTCH

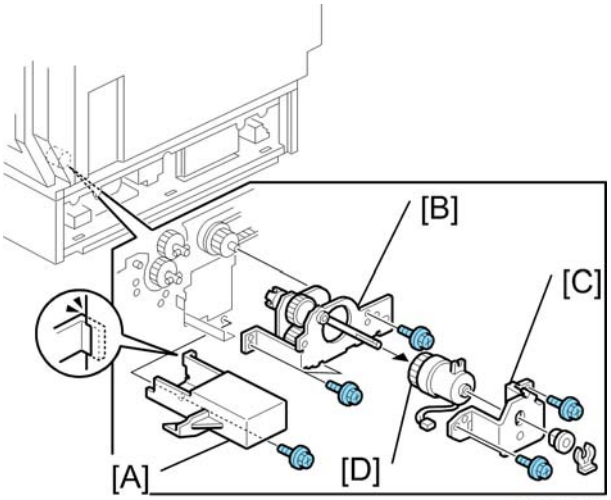


g832r107

1. Rear cover (☛ p.1 "Rear Cover")
2. Remove the tray end cover [A].
3. Paper feed gear unit [B] (🔩 x 3, 🖐 x 1)
4. Paper feed clutch bracket [C] (🗜 x 1, 🔩 x 2, bushing x 1)
5. Paper feed clutch [D]

## 1.2.3 PAPER FEED MOTOR

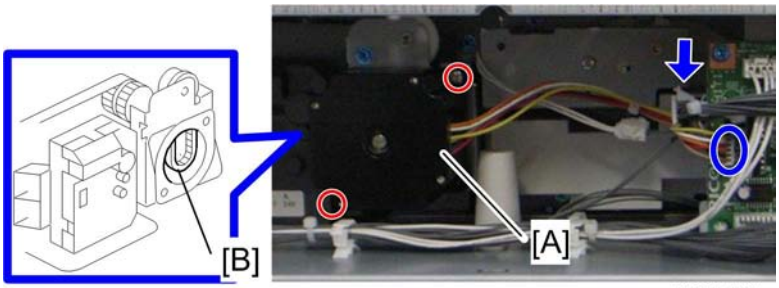


d387r106

1. Rear cover (☛ p.1 "Rear Cover")
2. Paper feed motor [A] (🖐 x 1, 🔩 x 2, 🔌 x 1)

Note

- When installing the paper feed motor, make sure that the gear of the paper feed motor holds the timing belt [B].

## 1.2.4 MAIN BOARD

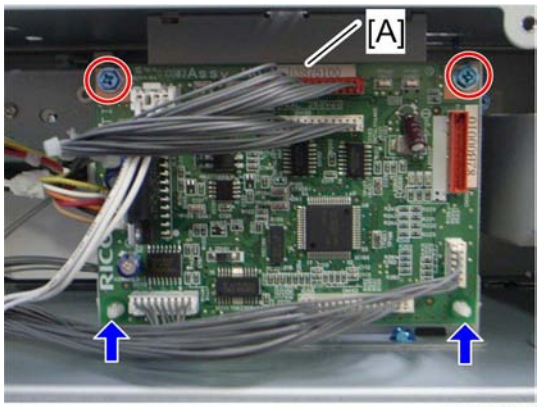


d387r108

1. Rear cover (☛ p.1 "Rear Cover")
2. Main board [A] (All ✋s, 🖉 x 2, snap pin x 2)

# 1.3 PAPER FEED UNIT

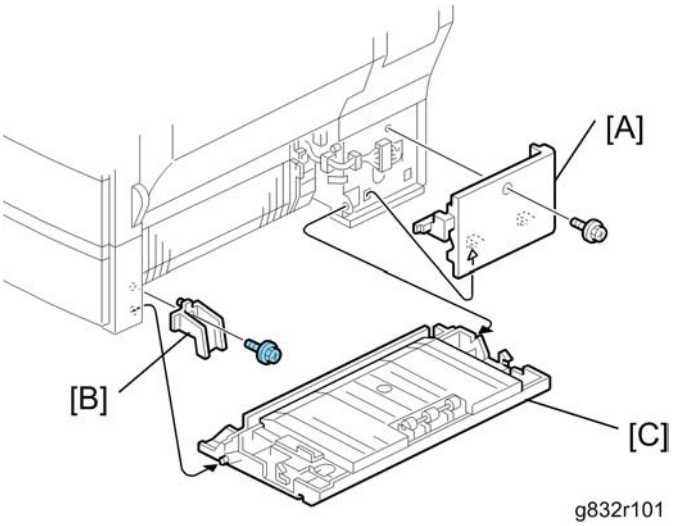


1. Right cover [A] (🔩 x 2)
2. Stopper [B] (🔩 x 1)
3. Vertical transport guide [C] of the paper feed unit

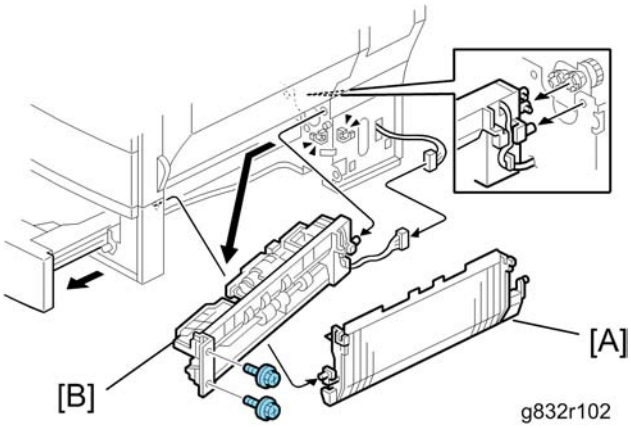


4. Pull tray 3.
5. Paper guide [A]
6. Paper feed unit [B] (🔩 x 2, 🖐 x 1, 🔌 x 2)

# 1.4 ROLLERS AND SENSORS

## 1.4.1 PICK-UP, PAPER FEED AND SEPARATION ROLLERS

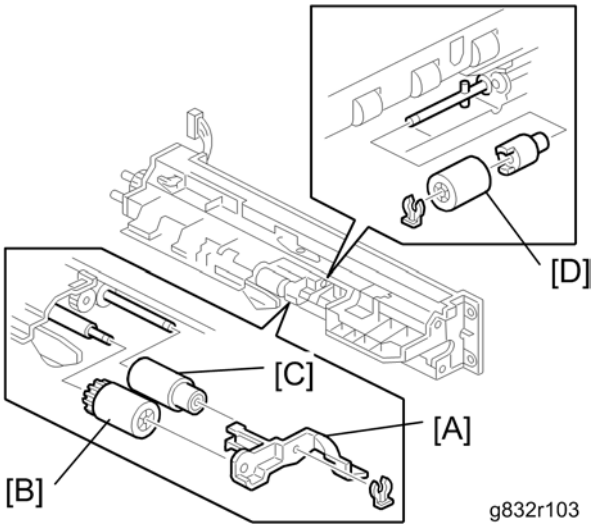


1. Paper feed unit (☛ p.5 "Paper Feed Unit")
2. Roller holder [A] (⚙ x 1)
3. Pick-up roller [B]
4. Paper feed roller [C]
5. Separation roller [D] (⚙ x 1)

## 1.4.2 LIFT, PAPER END, AND RELAY SENSORS

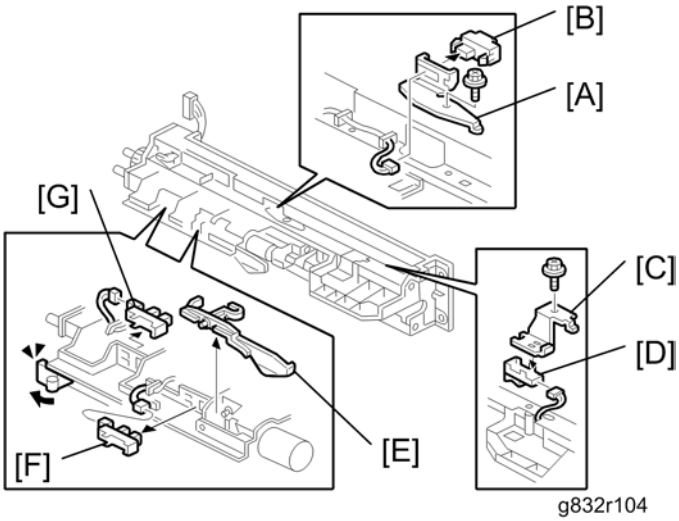


1. Paper feed unit (☛ p.5 "Paper Feed Unit")
2. Vertical transport sensor bracket [A] (🖉 x 1)
3. Vertical transport sensor [B] (✋ x 1)
4. Paper feed sensor bracket [C] (🖉 x 1)
5. Paper feed sensor [D] (✋ x 1)
6. Paper end sensor filler [E]
7. Paper end sensor [F] (✋ x 1)
8. Lift sensor [G] (✋ x 1)

# Internal Shift Tray SH3040

# (D388)

| D388 INTERNAL SHIFT TRAY SH3040 | | |
|---|---|---|
| **Page** | **Date** | **Added/Updated/New** |
| | | None |

# Internal Shift Tray SH3040 (D388)

## TABLE OF CONTENTS

**1. REPLACEMENT AND ADJUSTMENT ..... 1**

1.1 TRAY COVER ..... 1

– When Attaching the Tray Cover – ..... 1

1.2 TRAY MOTOR AND HALF TURN SENSOR BOARD ..... 2

# Read This First

## Safety and Symbols

### Replacement Procedure Safety

**⚠CAUTION**

- Turn off the main power switch and unplug the machine before beginning any of the replacement procedures in this manual.

### Symbols Used in this Manual

This manual uses the following symbols.

☛: See or Refer to

: Screws

: Connector

: Clip ring

: Clamp

: E-ring

# 1. REPLACEMENT AND ADJUSTMENT

## 1.1 TRAY COVER

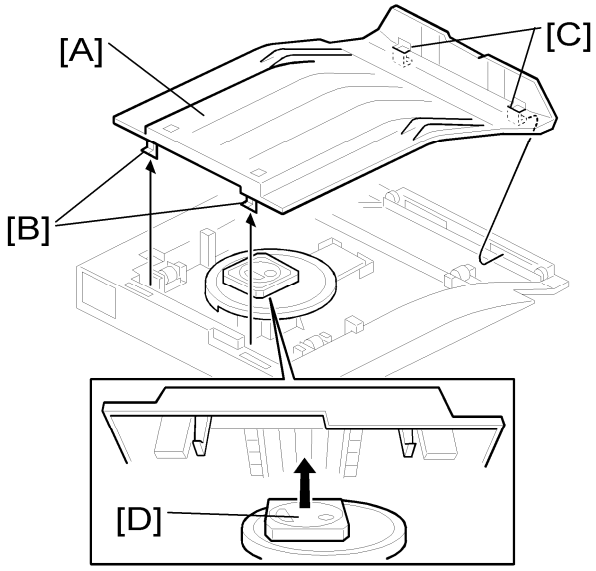


1. Remove the tray cover [A] by pressing on the two pawls [B] on the left side of the cover.

### *– When Attaching the Tray Cover –*

Note

- The right side of the tray cover should be attached first.

1. Fit the pawls [C] on the shift tray.
2. Align the square [D] so that it fits into the groove in the underside of the tray cover and does not interfere with the attachment of the cover.
3. Complete the attachment by inserting the left side pawls [B] into place.

## 1.2 TRAY MOTOR AND HALF TURN SENSOR BOARD

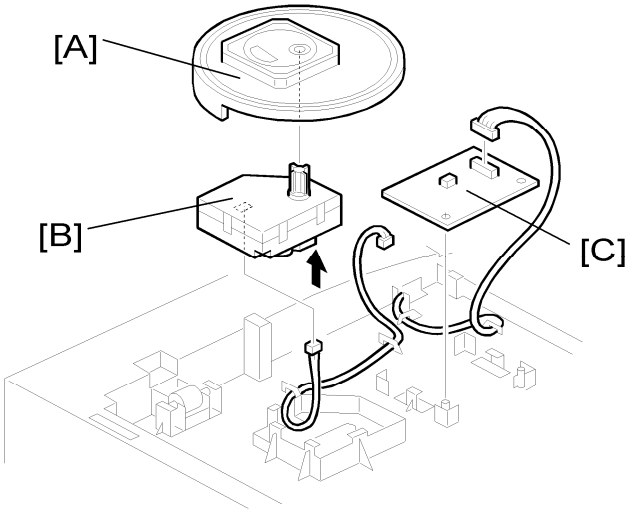


1. Top cover (☛ p.1 "Tray Cover")
2. Slip disc [A]
3. Tray motor [B] (✋ x 1)
4. Half turn sensor board [C] (✋ x 1).

# Fax Option Type C5000

# (D393)

| D393 FAX OPTION TYPE C5000 | | |
|---|---|---|
| **Page** | **Date** | **Added/Updated/New** |
| 43 | 10/05/2009 | Error Code 31-21 added. |
| 159 | 02/02/2009 | Service Ram Address |
| 158 ~ 160 | 12/11/2009 | Service Ram Address |
| 158 ~ 160 | 05/14/2009 | Service Ram Addresses |

# Fax Option Type C5000 (D393)

## Table of Contents


**1. INSTALLATION PROCEDURE .....1**

1.1 FAX UNIT (D393) ..... 1

1.1.1 COMPONENT CHECK ..... 1

1.1.2 INSTALLATION PROCEDURE ..... 3

1.2 FAX UNIT OPTIONS ..... 9

1.2.1 MEMORY UNIT (G578) ..... 9

1.2.2 HANDSET (B433) ..... 9

For D023/D025 ..... 9

For D027/ D029 ..... 11

1.3 G3 INTERFACE UNIT (D393) ..... 14

1.3.1 COMPONENT CHECK ..... 14

1.3.2 INSTALLATION PROCEDURE ..... 16

For Installing the single G3 Board ..... 16

For Installing the Double G3 Boards ..... 19

**2. REPLACEMENT AND ADJUSTMENT .....22**

2.1 FCU ..... 22

**3. TROUBLESHOOTING .....23**

3.1 ERROR CODES ..... 23

3.2 IFAX TROUBLESHOOTING ..... 44

3.3 IP-FAX TROUBLESHOOTING ..... 47

3.3.1 IP-FAX TRANSMISSION ..... 47

Cannot send by IP Address/Host Name ..... 47

Cannot send via VoIP Gateway ..... 48

Cannot send by Alias Fax number. ..... 49

3.3.2 IP-FAX RECEPTION ..... 51

Cannot receive via IP Address/Host Name. ..... 51

Cannot receive by VoIP Gateway ..... 51

Cannot receive by Alias Fax number ..... 52

**4. SERVICE TABLE ..... 55**

4.1 BEFOREHAND ..... 55
4.2 SERVICE TABLES ..... 56
4.2.1 SP1-XXX (BIT SWITCHES) ..... 56
4.2.2 SP2-XXX (RAM DATA) ..... 58
4.2.3 SP3-XXX (TEL LINE SETTINGS) ..... 59
4.2.4 SP4-XXX (ROM VERSIONS) ..... 61
4.2.5 SP5-XXX (INITIALIZING) ..... 62
4.2.6 SP6-XXX (REPORTS) ..... 63
4.2.7 SP7-XXX (TEST MODES) ..... 66
4.3 BIT SWITCHES ..... 68
4.3.1 SYSTEM SWITCHES ..... 68
4.3.2 I-FAX SWITCHES ..... 81
4.3.3 PRINTER SWITCHES ..... 88
4.3.4 COMMUNICATION SWITCHES ..... 95
4.3.5 G3 SWITCHES ..... 104
4.3.6 G3-2/3 SWITCHES ..... 114
4.3.7 IP FAX SWITCHES ..... 123
4.4 NCU PARAMETERS ..... 131
4.5 DEDICATED TRANSMISSION PARAMETERS ..... 147
4.5.1 PROGRAMMING PROCEDURE ..... 147
4.5.2 PARAMETERS ..... 147
Fax Parameters ..... 147
E-mail Parameters ..... 151
4.6 SERVICE RAM ADDRESSES ..... 155

**5. SPECIFICATIONS ..... 165**

5.1 GENERAL SPECIFICATIONS ..... 165
5.1.1 FCU ..... 165
5.1.2 CAPABILITIES OF PROGRAMMABLE ITEMS ..... 167
5.2 IFAX SPECIFICATIONS ..... 169
5.3 IP-FAX SPECIFICATIONS ..... 171
5.4 FAX UNIT CONFIGURATION ..... 172

# Read This First

## Important Safety Notices

**WARNING**

- Never install telephone wiring during a lightning storm.
- Never install telephone jacks in wet locations unless the jack is specifically designed for wet locations.
- Never touch uninsulated telephone wires or terminals unless the telephone line has been disconnected at the network interface.
- Use caution when installing or modifying telephone lines.
- Avoid using a telephone (other than a cordless type) during an electrical storm. There may be a remote risk of electric shock from lightning.
- Do not use a telephone or cellular phone to report a gas leak in the vicinity of the leak.

**CAUTION**

- Before installing the fax unit, switch off the main switch, and disconnect the power cord.
- The fax unit contains a lithium battery. The danger of explosion exists if a battery of this type is incorrectly replaced. Replace only with the same or an equivalent type recommended by the manufacturer. Discard batteries in accordance with the manufacturer's instructions and local regulations.

Note

- **Note for Australia**:
- Unit must be connected to Telecommunication Network through a line cord that meets the requirements of ACA Technical Standard TS008.

# Symbols and Abbreviations

## Conventions Used in this Manual

This manual uses several symbols.

| Symbol | What it means |
|---|---|
| ☛ | Refer to section number |
| | Screw |
| | Connector |
| | E-ring |
| | Clip ring |
| | Clamp |

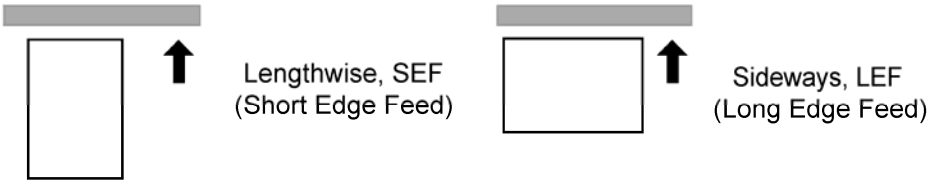


## Cautions, Notes, etc.

The following headings provide special information:

**⚠WARNING**

- Failure to obey warning information could result in serious injury or death.

**⚠CAUTION**

- Obey these guidelines to ensure safe operation and prevent minor injuries.

Important

- Obey these guidelines to avoid problems such as misfeeds, damage to originals, loss of valuable data and to prevent damage to the machine.
- Always obey these guidelines to avoid serious problems such as misfeeds, damage to originals, loss of valuable data and to prevent damage to the machine. bold is added for emphasis.

Note

- This document provides tips and advice about how to best service the machine.

# 1. INSTALLATION PROCEDURE

## 1.1 FAX UNIT (D393)

### 1.1.1 COMPONENT CHECK

Check the quantity and condition of the components against the following list.

| No. | Description | Q'ty |
|---|---|---|
| 1 | FCU I/F Board | 1 |
| 2 | FCU | 1 |
| 3 | FCU I/F Board Bracket | 1 |
| 4 | Support Bracket | 1 |
| 5 | Speaker | 1 |
| 6 | Modular Bracket | 1 |
| 7 | Handset Bracket (NA only) | 2 |
| 8 | Handset Support Bracket (NA only) | 1 |
| 9 | Screw: M3x6 (NA only) | 2 |
| 10 | Telephone Cable (NA only) | 1 |
| 11 | Multi-Language Decals | 1 (Excluding NA)/ 2 (EU) |
| 12 | Harness: TEL and LINE | 2 |
| 13 | G3 Decal | 1 |
| 14 | Serial Number Decal | 1 |
| 15 | FCC Decal (NA only) | 1 |
| 16 | Ferrite Core | 1 (EU) or 2 (NA) |

Fax Unit (D393)

| No. | Description | Q'ty |
|---|---|---|
| 17 | Screw: M3x6 | 13 |
| 18 | Clamp | 3 |
| 19 | Fax Key top | 2 |
| 20 | EMC Address Decal | 1 (EU Only) |
| 21 | Quick Reference Fax Guide | 1 (Excluding EU) |

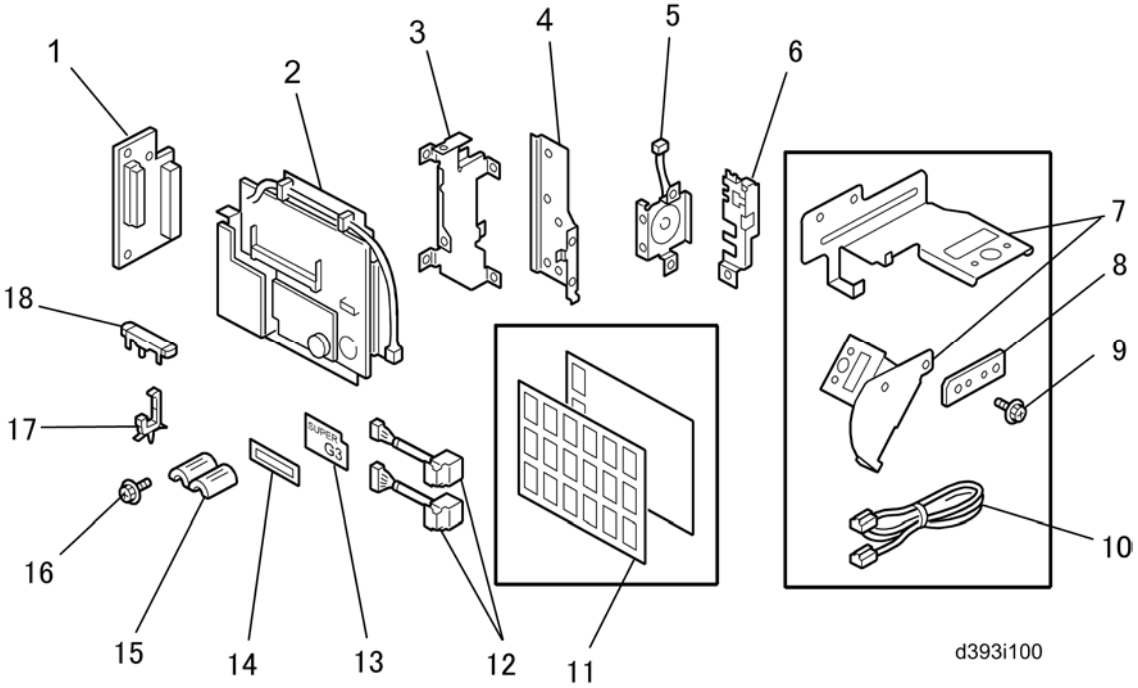

## 1.1.2 INSTALLATION PROCEDURE

**CAUTION**

- **Before installing this fax unit:**
  - Print out all data in the printer buffer.
  - Turn off the main power switch and disconnect the power cord and the network cable.

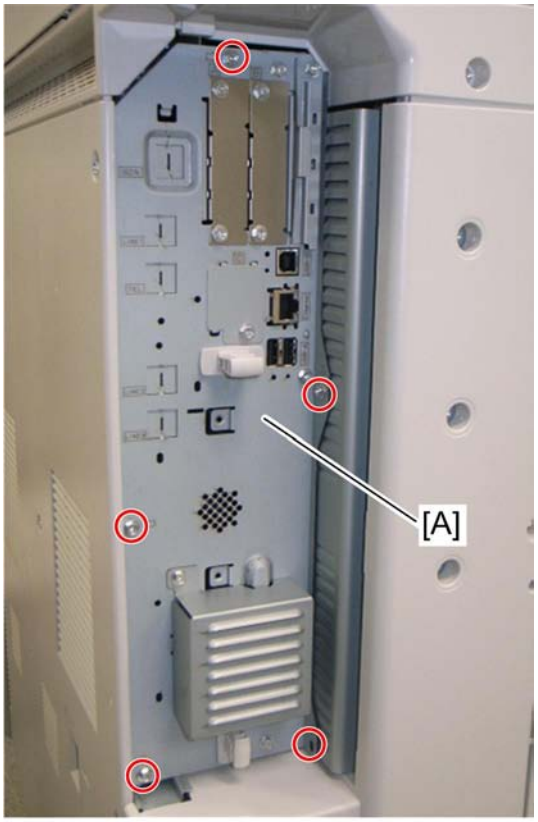


D393i075

1. Remove the controller board [A] (🔩 x 5).

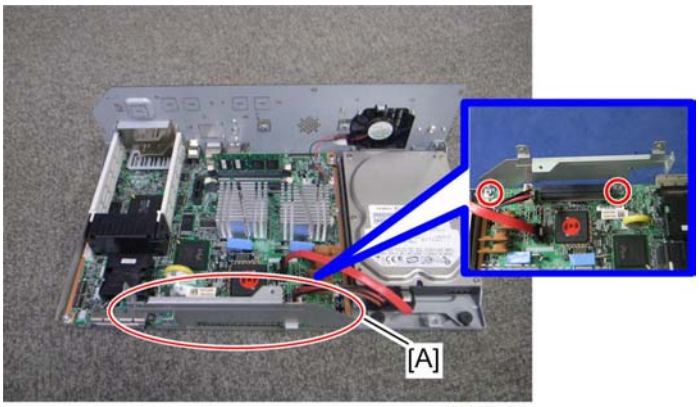


d393i008

2. Attach the FCU I/F board bracket [A] to the controller board (🔩 x 2).

Fax Unit (D393)

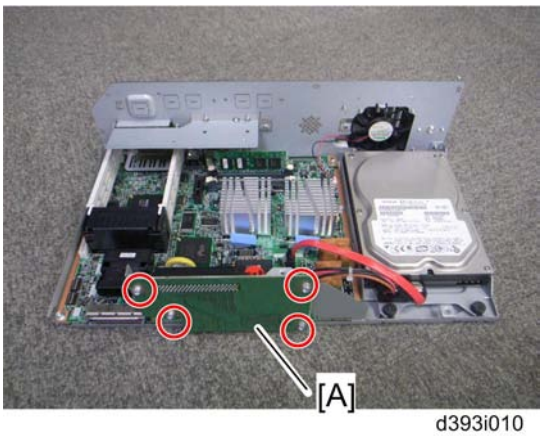


d393i010

3. Attach the FCU I/F board [A] to the FCU I/F board bracket (🔩 x 4).

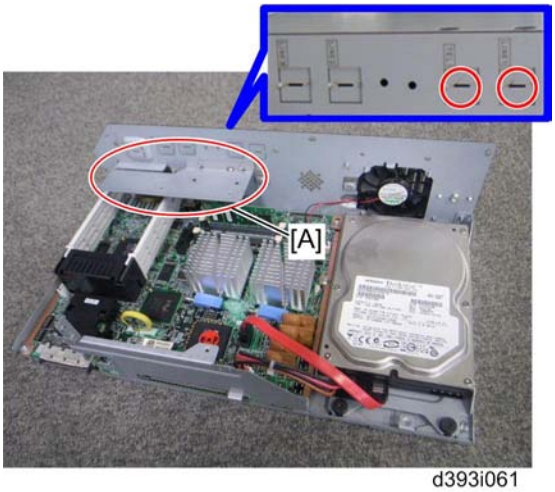


d393i061

4. Attach the support bracket [A] to the controller box (🔩 x 2).
5. Remove the "TEL" and "LINE1" covers with a screw driver.

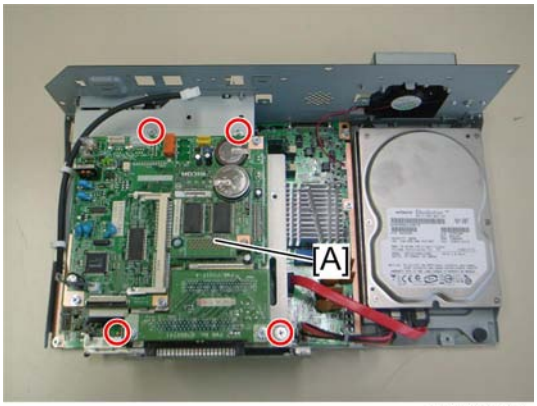


D393i076

6. Install the FCU [A] to the controller board (🔩 x 4).

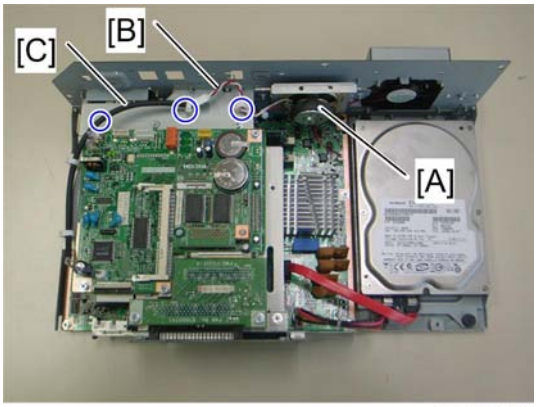


d393i077

7. Install the speaker [A] to the controller box (x 2) and connect the speaker cable [B] with the speaker relay cable [C] ( x 3).

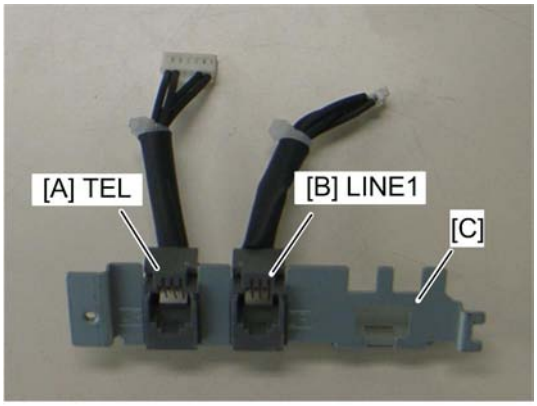


d393i094

8. Connect the two modular harnesses [A] [B] to the modular bracket [C].

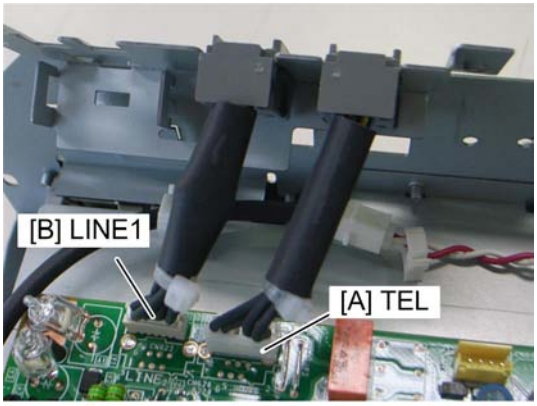


d393i095

9. Connect the two modular harnesses [A] [B] to the FCU.

Fax Unit (D393)

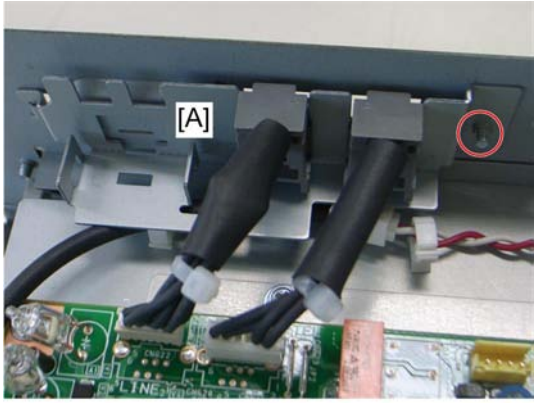


d393i096

10. Attach the modular bracket [A] to the controller box (x 1).

d393i068

11. Switch the MBU battery jumper switch [A] to "ON" position.

Note

- Make sure that the MBU board is firmly connected to the FCU.

12. Reinstall the controller box.
13. Attach the handset support bracket and handset bracket to the copier, and then connect the handset cord with the ferrite core to the "TEL" jack if you install the handset to the machine.

Note

- For details, refer to the "Hand Set Installation" in the Service Manual for the Fax Unit (D393).

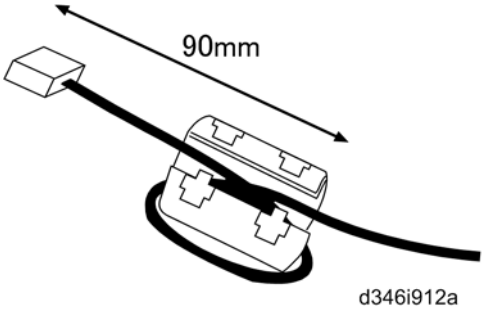


14. Attach the ferrite core to the telephone cord.
15. Connect the telephone cord to the "LINE 1" jack.

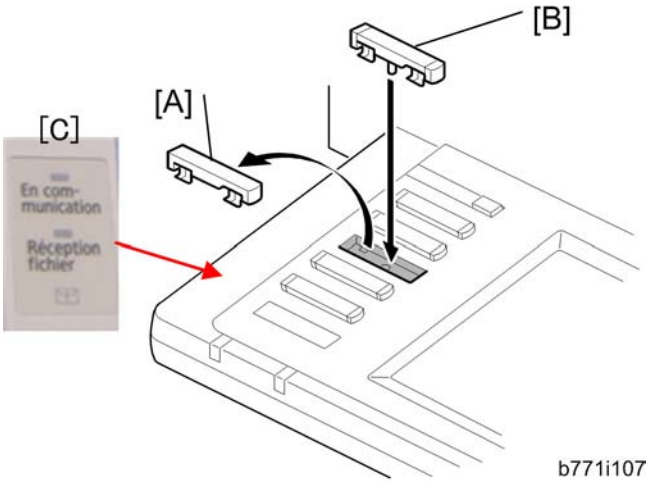


16. Replace bottom from the third key-slot cover [A] to the fax key [B].
17. Attach the Multi-Language Decals [C] (EU only).

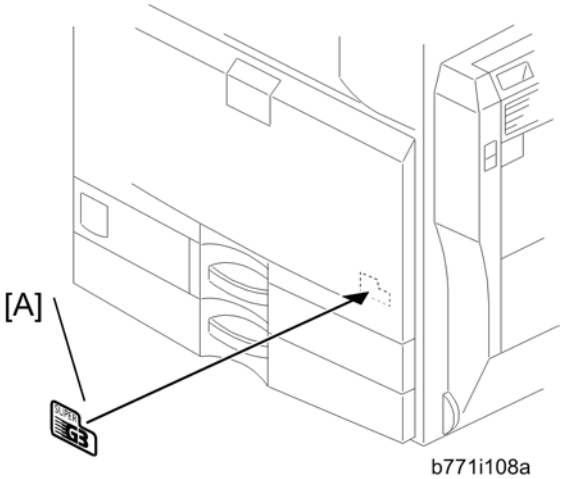


18. Attach the decal [A] (SUPER G3) to the front door.
19. Attach the serial number decal under the copier serial number decal on the rear cover of the machine.
20. Attach FCC decal on the rear cover of the machine (NA only).

Fax Unit (D393)

21. Put the power plug into the outlet and turn on the main power of the machine.

Note

- Make sure that the outlet is grounded.
- "SRAM formatted" shows on the operation panel after you have turned the main switch on. Turn the main switch off and on again for normal use.

22. Make sure that the date and time are correctly set.

# 1.2 FAX UNIT OPTIONS

## 1.2.1 MEMORY UNIT (G578)

1. Rear cover (☛ "Installation Procedure" in the "Fax Unit (D393)")
2. Controller box left cover (☛ "Installation Procedure" in the "Fax Unit (D393)")

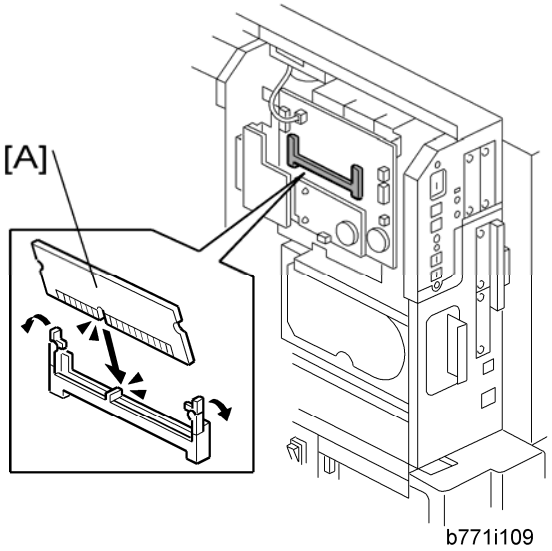


3. Install the memory option [A] on the FCU.
4. Re-aasemble the machine

## 1.2.2 HANDSET (B433)

### *For D023/D025*

Note

- The optional handset is available for the U.S. version only.

**For the copier without any finisher**

Fax Unit Options

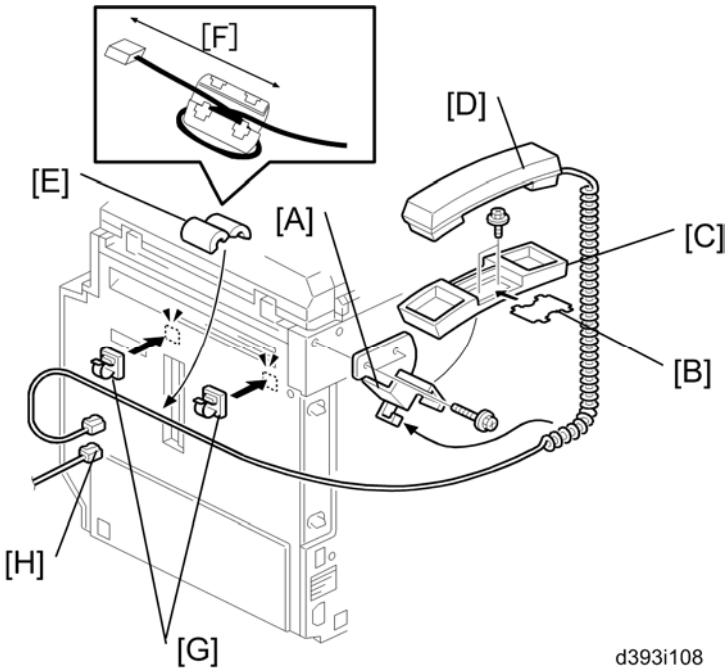


1. Make two holes in the scanner left cover.
2. Attach the bracket [A] enclosed with the fax unit (🔩 x 2: M3 x 12) as shown.
3. Remove the label [B] from the handset cradle [C]. Attach the cradle [C] to the bracket [A] (🔩 x 2: M3 x 8), and then replace the label [B].
4. Install the handset [D] on the cradle [C].
5. Attach the ferrite core [E] to the cable. The length [F] must be 90 mm.
6. Attach the two clamps [G] as shown.
7. Line the cable [H] as shown (🔧 x 2).
8. Connect the cable [H] to the "TEL" jack at the rear of the machine.

**For the copier with a finisher**

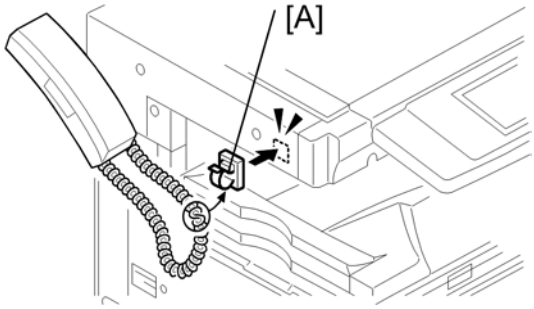


1. Do the handset installation procedure "for the copier without any finisher".
2. Attach the clamp [A] to the scanner left cover.
3. Clamp the handset cord with clamp [A].

### *For D027/ D029*

Note

- The optional handset is available for the U.S. version only.

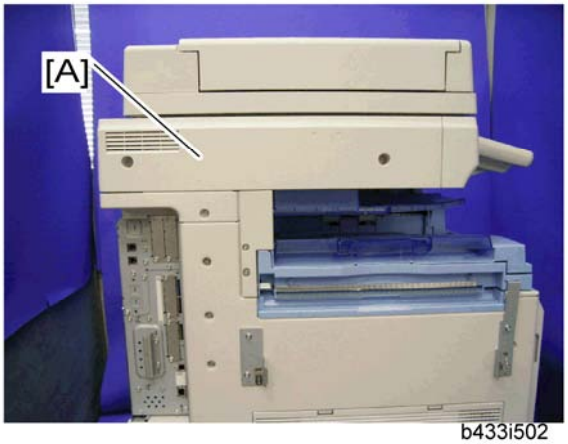


b433i502

1. Remove the scanner left cover [A] (🔩 x 2).

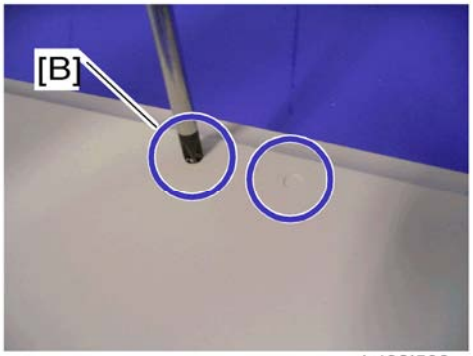


b433i503

2. Make two holes in the scanner left cover.

Note

- Drill a hole from the outside of the cover with a screwdriver.

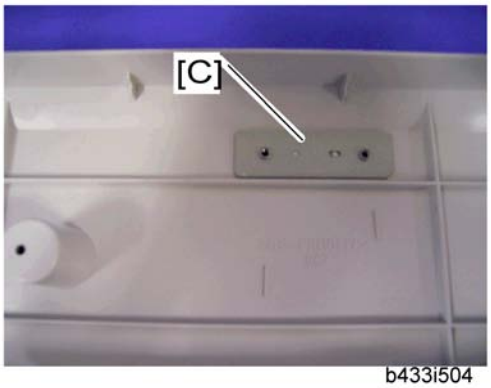


b433i504

3. Attach the hand set support bracket [C] inside the scanner left cover.

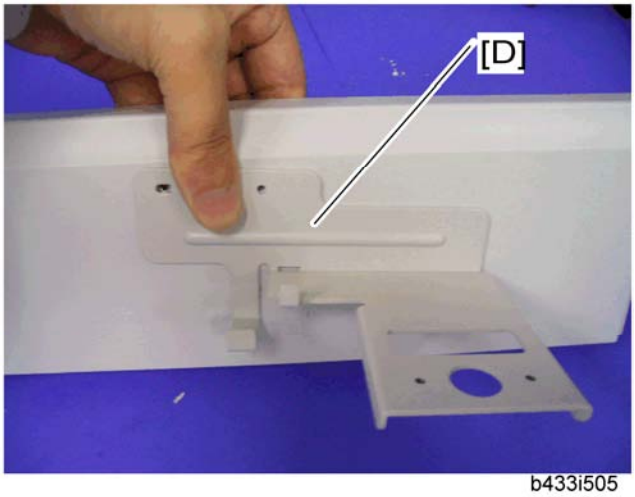


4. Hold the handset bracket [D] and handset support bracket (set inside the scanner left cover).
5. Secure the handset bracket [D] (🖉 x 2).

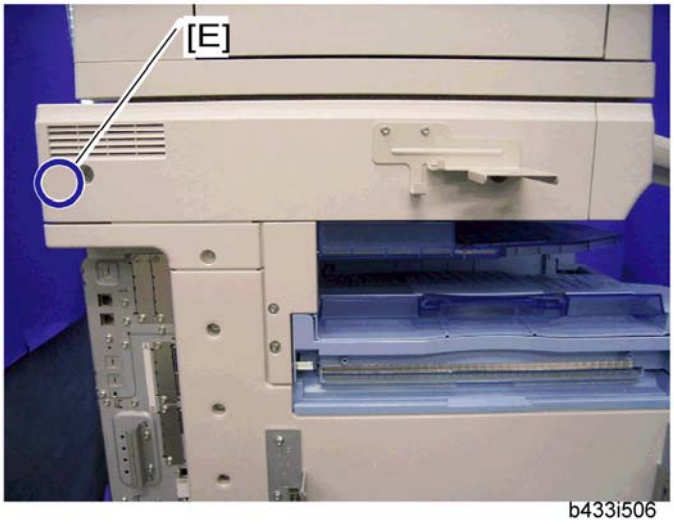


6. Install the scanner left cover on the machine.
7. Attach the clamp to the location [E].
8. Set the handset on the handset bracket.

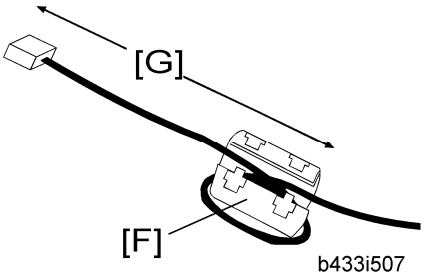


9. Put the ferrite core [F] on the handset cord as shown. The length [G] must be 90 mm.

10. Clamp the hand set cord.
11. Connect the handset cable to the "TEL" jack at the rear of the machine.

# 1.3 G3 INTERFACE UNIT (D393)

## 1.3.1 COMPONENT CHECK

Check the quantity and condition of the components against the following list.

| No. | Description | Q'ty |
|---|---|---|
| 1 | SG3 Interface Unit | 1 |
| 2 | Modular Bracket for SG3 | 1 |
| 3 | Clamp | 2 |
| 4 | Clamp | 4 |
| 5 | Screw: M3x6 | 6 |
| 6 | Ferrite Core | 1 |
| 7 | Telephone Cable (NA only) | 1 |
| 8 | Flat Cable | 1 |
| 9 | Harness | 1 |
| 10 | EMC Address Decal (EU only) | 1 |
| 11 | FCC Decal (NA only) | 1 |

G3 Interface Unit (D393)

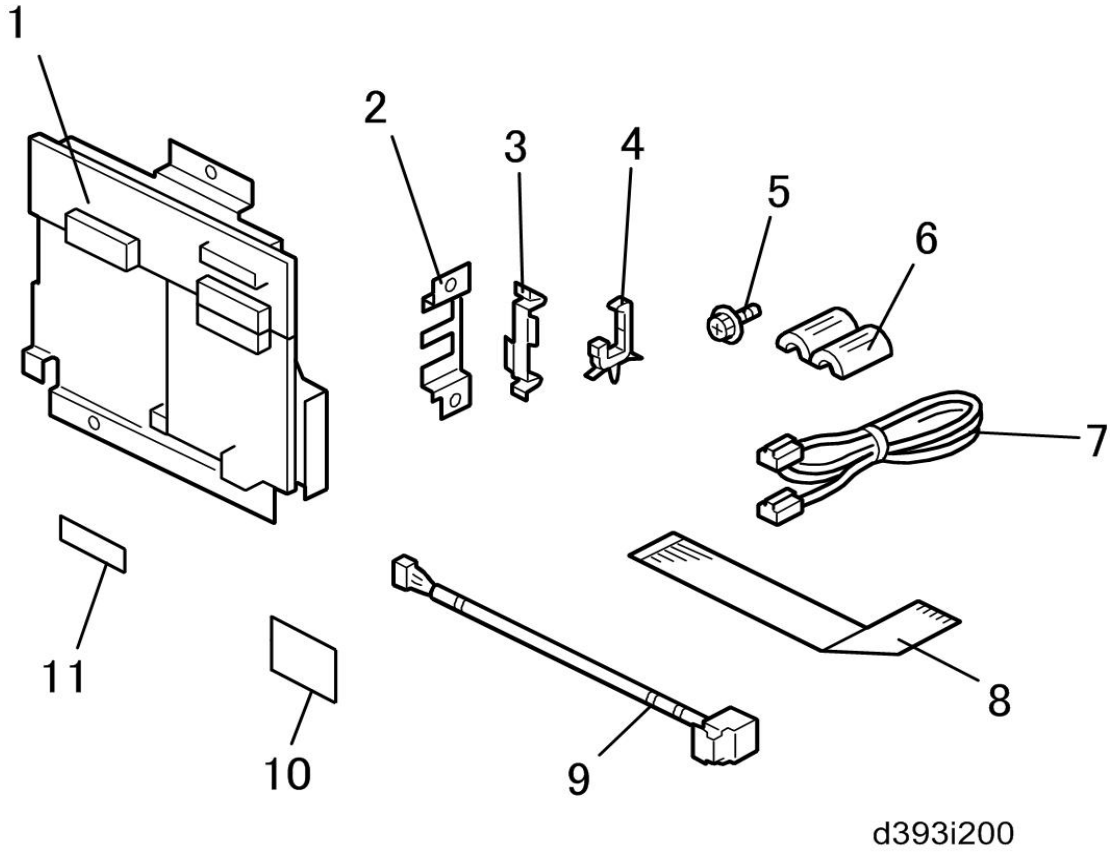

## 1.3.2 INSTALLATION PROCEDURE

**CAUTION**

- **Before installing this optional unit:**
- Print out all data in the printer buffer.
- Turn off the main switch and disconnect the power cord and the network cable.

You can add two more SG3 boards to this model. Follow the procedures for adding the single SG3 board installation or double SG3 boards installation as a customer needs.

### *For Installing the single G3 Board*

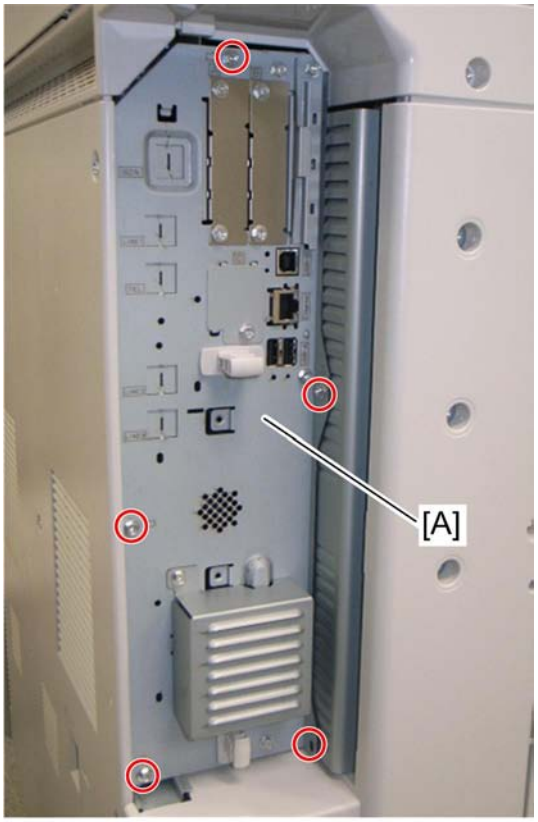


D393i075

1. Remove the controller box [A] (🔩 x 5).

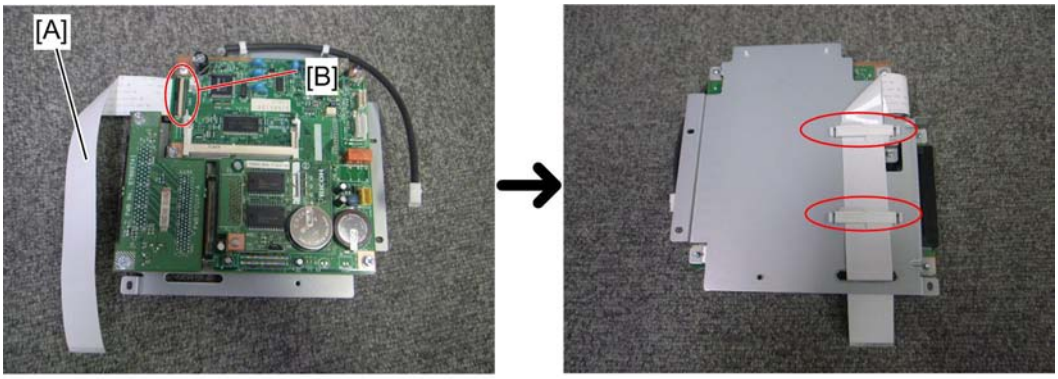


d393i011 d393i012

2. Attach one end (short length) of the flat cable [A] to the connector [B] of the FCU board.
3. Hold the flat cable with two clamps and pass the other end of the flat cable through the cutout as shown above.

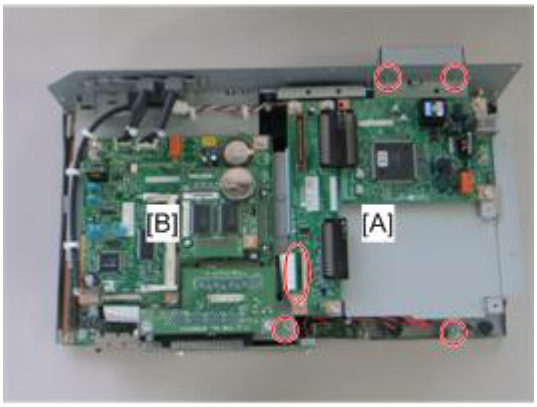


d393i081

4. Connect the SG3 interface unit [A] to the controller board [B] with the flat cable (☞ x 4).

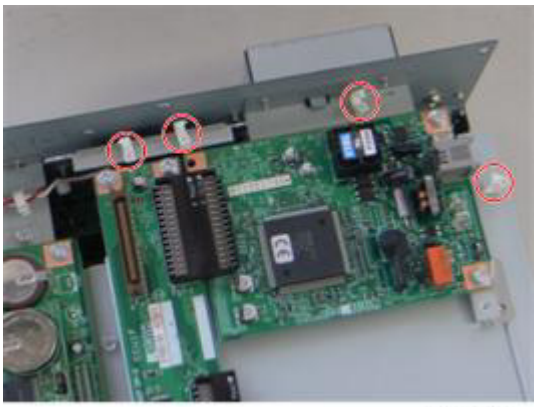

d393i048

5. Attach four clamps to the brackets.

G3 Interface Unit (D393)

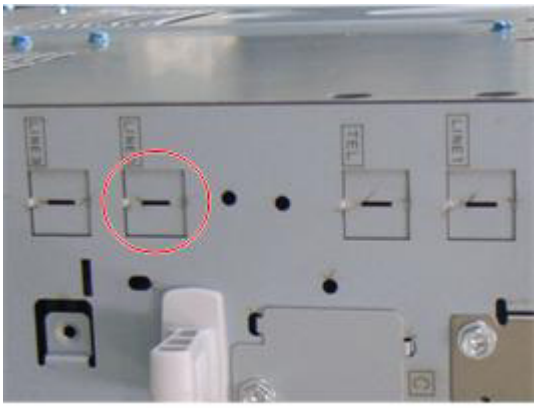

d393i088C

6. Remove the "LINE2" cover with a screwdriver.

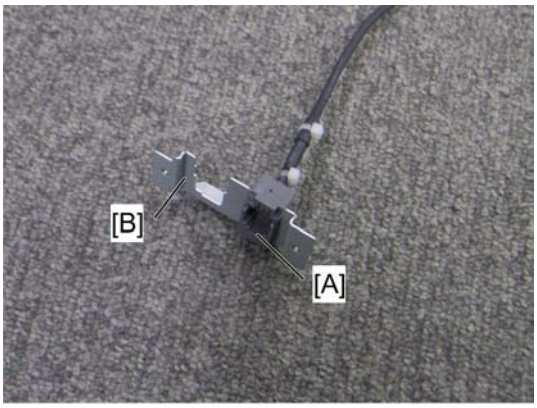


d393i047

7. Attach the socket of harness [A] (LINE2) to the modular bracket [B] for SG3.

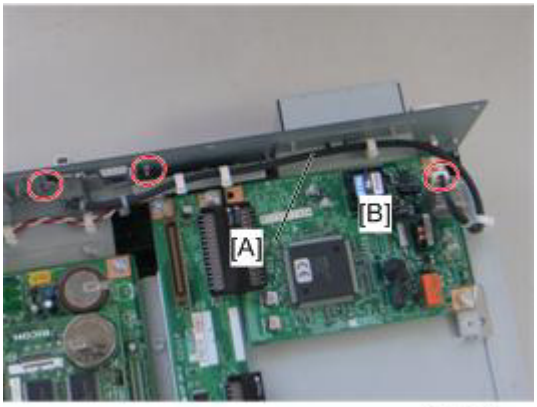


d393i091

8. Connect the harness [A] to the SG3 interface unit [B] ( x 4).
9. Attach the modular bracket for SG3 to the controller box ( x 2).
10. Reinstall the controller box.

### *For Installing the Double G3 Boards*

d393i090

1. Remove one of SG3 boards from the SG3 interface units and then attach the SG3 board to the other SG3 interface unit (🔩 x 2).
2. Remove the controller box.

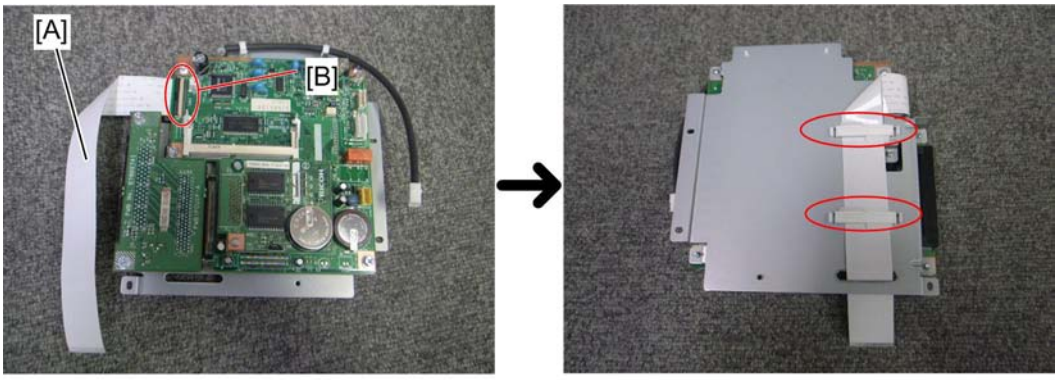


d393i011 d393i012

3. Attach one end (short length) of the flat cable [A] to the connector [B] of the FCU board.
4. Hold the flat cable with two clamps and pass the other end of the flat cable through the cutout as shown above.

G3 Interface Unit (D393)

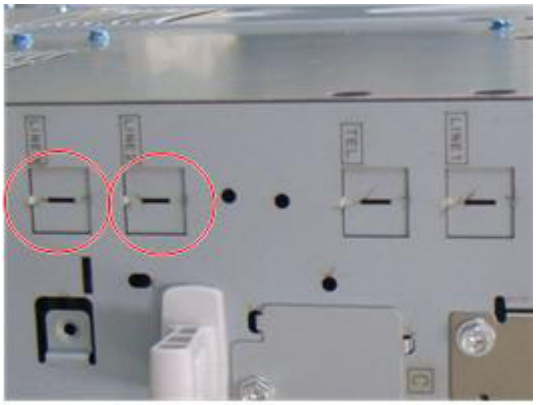

d393i088D

5. Remove the "LINE2" cover and "LINE3" cover with a screwdriver.

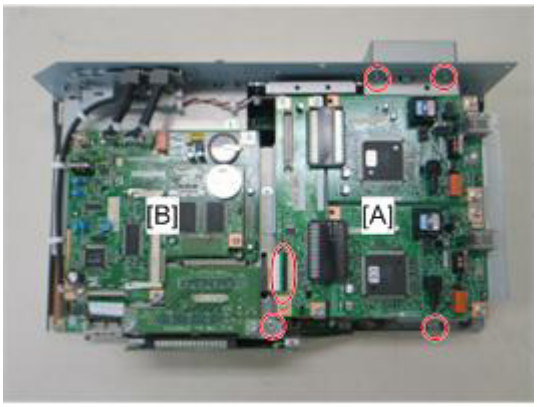


d393i081

6. Connect the SG3 interface unit [A] to the controller board [B] with the flat cable (🖉 x 4).

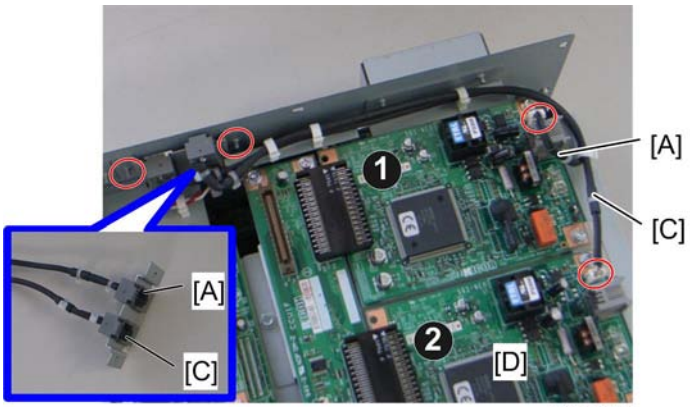


d393i092

7. Attach the socket of harness [A] (LINE2) and the socket of harness [C] (LINE3) to the modular bracket for SG3.
8. Connect the harness [A] (LINE2) to the first SG3 board ❶ and the harness [C] (LINE3) to the second SG3 board ❷ (🔩 x 4).
9. Attach the modular bracket for SG3 to the controller box (🖉 x 2).

10. Reinstall the controller box.
11. Attach the ferrite core to the telephone cord for single SG3 board installation, or the two ferrite cores to the telephone cords for double-SG3 board installation.
12. Connect the telephone cord to the "LINE 2" jack for single SG3 board installation, or connect the telephone cords to the "LINE2" and "LINE3" jacks for double-SG3 board installation.
13. Connect the power plug to a power outlet and turn on the main power switch.
14. Enter the service mode. Set bit 1 of communication switch 16 to "1" (SP1-104-023).
15. Set bit 3 of communication switch 16 to "1" (SP1-104-023) if you have installed two SG3 boards.
16. Exit the service mode.
17. Turn the main power switch off and on.
18. Print out the system parameter list. Then check that "G3" shows as an option.
19. Set up and program the items required for PSTN-2 communications.

# 2. REPLACEMENT AND ADJUSTMENT

## 2.1 FCU

1. When you replace the FCU board, remove the MBU board from the old FCU board and install it on the new FCU board.
2. Set the correct date and time with the User Tools: User Tools > System Settings > Timer Setting > Set Date/Time.

Note

- Do not turn off the battery switch (SW1).
- Do SP6101 to print the system parameters, and check the settings.

# 3. TROUBLESHOOTING

## 3.1 ERROR CODES

If an error code occurs, retry the communication. If the same problem occurs, try to fix the problem as suggested below. Note that some error codes appear only in the error code display and on the service report.

| Code | Meaning | Suggested Cause/Action |
|---|---|---|
| 0-00 | DIS/NSF not detected within 40 s of Start being pressed | ▪ Check the line connection.<br>▪ The machine at the other end may be incompatible.<br>▪ Replace the FCU.<br>▪ Check for DIS/NSF with an oscilloscope.<br>▪ If the rx signal is weak, there may be a bad line. |
| 0-01 | DCN received unexpectedly | ▪ The other party is out of paper or has a jammed printer.<br>▪ The other party pressed Stop during communication. |
| 0-03 | Incompatible modem at the other end | The other terminal is incompatible. |
| 0-04 | CFR or FTT not received after modem training | ▪ Check the line connection.<br>▪ Try changing the tx level and/or cable equalizer settings.<br>▪ Replace the FCU.<br>▪ The other terminal may be faulty; try sending to another machine.<br>▪ If the rx signal is weak or defective, there may be a bad line.<br>**Cross reference**<br>Tx level - NCU Parameter 01 (PSTN) |

Error Codes

| Code | Meaning | Suggested Cause/Action |
|---|---|---|
| | | Cable equalizer - G3 Switch 07 (PSTN)<br>Dedicated Tx parameters in Service Program Mode |
| 0-05 | Modem training fails even G3 shifts down to 2400 bps. | ▪ Check the line connection.<br>▪ Try adjusting the tx level and/or cable equalizer.<br>▪ Replace the FCU.<br>▪ Check for line problems.<br>**Cross reference**<br>See error code 0-04. |
| 0-06 | The other terminal did not reply to DCS | ▪ Check the line connection.<br>▪ Try adjusting the tx level and/or cable equalizer settings.<br>▪ Replace the FCU.<br>▪ The other end may be defective or incompatible; try sending to another machine.<br>▪ Check for line problems.<br>**Cross reference**<br>See error code 0-04. |
| 0-07 | No post-message response from the other end after a page was sent | ▪ Check the line connection.<br>▪ Replace the FCU.<br>▪ The other end may have jammed or run out of paper.<br>▪ The other end user may have disconnected the call.<br>▪ Check for a bad line.<br>▪ The other end may be defective; try sending to another machine. |
| 0-08 | The other end sent RTN or PIN after receiving a page, because there were too many errors | ▪ Check the line connection.<br>▪ Replace the FCU.<br>▪ The other end may have jammed, or run out of paper or memory space. |

| Code | Meaning | Suggested Cause/Action |
|---|---|---|
| | | ▪ Try adjusting the tx level and/or cable equalizer settings.<br>▪ The other end may have a defective modem/FCU; try sending to another machine.<br>▪ Check for line problems and noise.<br>**Cross reference**<br>▪ Tx level - NCU Parameter 01 (PSTN)<br>▪ Cable equalizer - G3 Switch 07 (PSTN)<br>▪ Dedicated Tx parameters in Service Program Mode |
| 0-14 | Non-standard post message response code received | ▪ Incompatible or defective remote terminal; try sending to another machine.<br>▪ Noisy line: resend.<br>▪ Try adjusting the tx level and/or cable equalizer settings.<br>▪ Replace the FCU.<br>**Cross reference**<br>See error code 0-08. |
| 0-15 | The other terminal is not capable of specific functions. | The other terminal is not capable of accepting the following functions, or the other terminal's memory is full.<br>▪ Confidential rx<br>▪ Transfer function<br>▪ SEP/SUB/PWD/SID |
| 0-16 | CFR or FTT not detected after modem training in confidential or transfer mode | ▪ Check the line connection.<br>▪ Replace the FCU.<br>▪ Try adjusting the tx level and/or cable equalizer settings.<br>▪ The other end may have disconnected, or it may be defective; try calling another machine.<br>▪ If the rx signal level is too low, there may be a line problem. |

Error Codes

| Code | Meaning | Suggested Cause/Action |
|---|---|---|
| | | **Cross reference**<br>See error code 0-08. |
| 0-20 | Facsimile data not received within 6 s of retraining | ▪ Check the line connection.<br>▪ Replace the FCU.<br>▪ Check for line problems.<br>▪ Try calling another fax machine.<br>▪ Try adjusting the reconstruction time for the first line and/or rx cable equalizer setting.<br>**Cross reference**<br>Reconstruction time - G3 Switch 0A, bit 6<br>Rx cable equalizer - G3 Switch 07 (PSTN) |
| 0-21 | EOL signal (end-of-line) from the other end not received within 5 s of the previous EOL signal | ▪ Check the connections between the FCU and line.<br>▪ Check for line noise or other line problems.<br>▪ Replace the FCU.<br>▪ The remote machine may be defective or may have disconnected.<br>**Cross reference**<br>Maximum interval between EOLs and between ECM frames - G3 Bit Switch 0A, bit 4 |
| 0-22 | The signal from the other end was interrupted for more than the acceptable modem carrier drop time (default: 200 ms) | ▪ Check the line connection.<br>▪ Replace the FCU.<br>▪ Defective remote terminal.<br>▪ Check for line noise or other line problems.<br>▪ Try adjusting the acceptable modem carrier drop time.<br>**Cross reference**<br>Acceptable modem carrier drop time - G3 Switch 0A, bits 0 and 1 |
| 0-23 | Too many errors during reception | ▪ Check the line connection.<br>▪ Replace the FCU.<br>▪ Defective remote terminal |

| Code | Meaning | Suggested Cause/Action |
|---|---|---|
| | | ▪ Check for line noise or other line problems.<br>▪ Try asking the other end to adjust their tx level.<br>▪ Try adjusting the rx cable equalizer setting and/or rx error criteria.<br>**Cross reference**<br>Rx cable equalizer - G3 Switch 07 (PSTN)<br>Rx error criteria - Communication Switch 02, bits 0 and 1 |
| 0-30 | The other terminal did not reply to NSS(A) in AI short protocol mode | ▪ Check the line connection.<br>▪ Try adjusting the tx level and/or cable equalizer settings.<br>▪ The other terminal may not be compatible.<br>**Cross reference**<br>Dedicated tx parameters - Section 4 |
| 0-32 | The other terminal sent a DCS, which contained functions that the receiving machine cannot handle. | ▪ Check the protocol dump list.<br>▪ Ask the other party to contact the manufacturer. |
| 0-33 | The data reception (not ECM) is not completed within 10 minutes. | ▪ Check the line connection.<br>▪ The other terminal may have a defective modem/FCU. |
| 0-52 | Polarity changed during communication | ▪ Check the line connection.<br>Retry communication. |
| 0-55 | FCU does not detect the SG3. | ▪ FCU firmware or board defective.<br>▪ SG3 firmware or board defective. |
| 0-56 | The stored message data exceeds the capacity of the mailbox in the SG3. | ▪ SG3 firmware or board defective. |
| 0-70 | The communication mode specified in CM/JM was | ▪ The other terminal did not have a compatible communication mode (e.g., the other terminal |

Error Codes

| Code | Meaning | Suggested Cause/Action |
|---|---|---|
| | not available<br>(V.8 calling and called terminal) | was a V.34 data modem and not a fax modem.)<br>▪ A polling tx file was not ready at the other terminal when polling rx was initiated from the calling terminal. |
| 0-74 | The calling terminal fell back to T.30 mode, because it could not detect ANSam after sending CI. | ▪ The calling terminal could not detect ANSam due to noise, etc.<br>▪ ANSam was too short to detect.<br>▪ Check the line connection and condition.<br>▪ Try making a call to another V.8/V.34 fax. |
| 0-75 | The called terminal fell back to T.30 mode, because it could not detect a CM in response to ANSam (ANSam timeout). | ▪ The terminal could not detect ANSam.<br>▪ Check the line connection and condition.<br>▪ Try receiving a call from another V.8/V.34 fax. |
| 0-76 | The calling terminal fell back to T.30 mode, because it could not detect a JM in response to CM (CM timeout). | ▪ The called terminal could not detect a CM due to noise, etc.<br>▪ Check the line connection and condition.<br>▪ Try making a call to another V.8/V.34 fax. |
| 0-77 | The called terminal fell back to T.30 mode, because it could not detect a CJ in response to JM (JM timeout). | ▪ The calling terminal could not detect a JM due to noise, etc.<br>▪ A network that has narrow bandwidth cannot pass JM to the other end.<br>▪ Check the line connection and condition.<br>▪ Try receiving a call from another V.8/V.34 fax. |
| 0-79 | The called terminal detected CI while waiting for a V.21 signal. | ▪ Check for line noise or other line problems.<br>▪ If this error occurs, the called terminal falls back to T.30 mode. |
| 0-80 | The line was disconnected due to a timeout in V.34 | ▪ The guard timer expired while starting these phases. Serious noise, narrow bandwidth, or |

| Code | Meaning | Suggested Cause/Action |
|---|---|---|
| | phase 2 – line probing. | low signal level can cause these errors.<br>If these errors happen at the transmitting terminal:<br>▪ Try making a call at a later time.<br>▪ Try using V.17 or a slower modem using dedicated tx parameters.<br>▪ Try increasing the tx level.<br>▪ Try adjusting the tx cable equalizer setting.<br>If these errors happen at the receiving terminal:<br>▪ Try adjusting the rx cable equalizer setting.<br>▪ Try increasing the tx level.<br>▪ Try using V.17 or a slower modem if the same error is frequent when receiving from multiple senders. |
| 0-81 | The line was disconnected due to a timeout in V.34 phase 3 – equalizer training. | |
| 0-82 | The line was disconnected due to a timeout in the V.34 phase 4 – control channel start-up. | |
| 0-83 | The line was disconnected due to a timeout in the V.34 control channel restart sequence. | |
| 0-84 | The line was disconnected due to abnormal signaling in V.34 phase 4 – control channel start-up. | ▪ The signal did not stop within 10 s.<br>▪ Turn off the machine, then turn it back on.<br>▪ If the same error is frequent, replace the FCU. |
| 0-85 | The line was disconnected due to abnormal signaling in V.34 control channel restart. | ▪ The signal did not stop within 10 s.<br>▪ Turn off the machine, then turn it back on.<br>▪ If the same error is frequent, replace the FCU. |
| 0-86 | The line was disconnected because the other terminal requested a data rate using MPh that was not available in the currently selected symbol rate. | ▪ The other terminal was incompatible.<br>▪ Ask the other party to contact the manufacturer. |
| 0-87 | The control channel started after an unsuccessful primary channel. | ▪ The receiving terminal restarted the control channel because data reception in the primary channel was not successful. |

Error Codes

| Code | Meaning | Suggested Cause/Action |
|---|---|---|
| | | ▪ This does not result in an error communication. |
| 0-88 | The line was disconnected because PPR was transmitted/received 9 (default) times within the same ECM frame. | ▪ Try using a lower data rate at the start.<br>▪ Try adjusting the cable equalizer setting. |
| 2-11 | Only one V.21 connection flag was received | ▪ Replace the FCU. |
| 2-12 | Modem clock irregularity | ▪ Replace the FCU. |
| 2-13 | Modem initialization error | ▪ Turn off the machine, then turn it back on.<br>▪ Update the modem ROM.<br>▪ Replace the FCU. |
| 2-23 | JBIG compression or reconstruction error | ▪ Turn off the machine, then turn it back on. |
| 2-24 | JBIG ASIC error | ▪ Turn off the machine, then turn it back on. |
| 2-25 | JBIG data reconstruction error (BIH error) | ▪ JBIG data error<br>▪ Check the sender's JBIG function.<br>▪ Update the MBU ROM. |
| 2-26 | JBIG data reconstruction error (Float marker error) | |
| 2-27 | JBIG data reconstruction error (End marker error) | |
| 2-28 | JBIG data reconstruction error (Timeout) | |
| 2-29 | JBIG trailing edge maker error | ▪ FCU defective<br>▪ Check the destination device. |
| 2-50 | The machine resets itself for a fatal FCU system | ▪ If this is frequent, update the ROM, or replace the FCU. |

| Code | Meaning | Suggested Cause/Action |
|---|---|---|
| | error | |
| 2-51 | The machine resets itself because of a fatal communication error | ▪ If this is frequent, update the ROM, or replace the FCU. |
| 2-53 | Snd msg() in the manual task is an error because the mailbox for the operation task is full. | ▪ The user did the same operation many times, and this gave too much load to the machine. |
| 4-01 | Line current was cut | ▪ Check the line connector.<br>▪ Check for line problems.<br>▪ Replace the FCU. |
| 4-10 | Communication failed because of an ID Code mismatch (Closed Network) or Tel. No./CSI mismatch (Protection against Wrong Connections) | ▪ Get the ID Codes the same and/or the CSIs programmed correctly, then resend.<br>▪ The machine at the other end may be defective. |
| 5-10 | DCR timer expired | ▪ Replace the FCU. |
| 5-20 | Storage impossible because of a lack of memory | ▪ Temporary memory shortage.<br>▪ Test the SAF memory. |
| 5-21 | Memory overflow | |
| 5-23 | Print data error when printing a substitute rx or confidential rx message | ▪ Test the SAF memory.<br>▪ Ask the other end to resend the message. |
| 5-25 | SAF file access error | ▪ Replace an SD card or HDD.<br>▪ Replace the FCU. |
| 6-00 | G3 ECM - T1 time out | ▪ Try adjusting the rx cable equalizer. |

Error Codes

| Code | Meaning | Suggested Cause/Action |
|---|---|---|
| | during reception of facsimile data | ▪ Replace the FCU. |
| 6-01 | G3 ECM - no V.21 signal was received | |
| 6-02 | G3 ECM - EOR was received | |
| 6-04 | G3 ECM - RTC not detected | ▪ Check the line connection.<br>▪ Check for a bad line or defective remote terminal.<br>▪ Replace the FCU. |
| 6-05 | G3 ECM - facsimile data frame not received within 18 s of CFR, but there was no line fail | ▪ Check the line connection.<br>▪ Check for a bad line or defective remote terminal.<br>▪ Replace the FCU.<br>▪ Try adjusting the rx cable equalizer<br>**Cross reference**<br>▪ Rx cable equalizer - G3 Switch 07 (PSTN) |
| 6-06 | G3 ECM - coding/decoding error | ▪ Defective FCU.<br>▪ The other terminal may be defective. |
| 6-08 | G3 ECM - PIP/PIN received in reply to PPS.NULL | ▪ The other end pressed Stop during communication.<br>▪ The other terminal may be defective. |
| 6-09 | G3 ECM - ERR received | ▪ Check for a noisy line.<br>▪ Adjust the tx levels of the communicating machines.<br>▪ See code 6-05. |
| 6-10 | G3 ECM - error frames still received at the other end after all communication attempts at 2400 bps | ▪ Check for line noise.<br>▪ Adjust the tx level (use NCU parameter 01 or the dedicated tx parameter for that address).<br>▪ Check the line connection. |

| Code | Meaning | Suggested Cause/Action |
|---|---|---|
| | | ▪ Defective remote terminal. |
| 6-21 | V.21 flag detected during high speed modem communication | ▪ The other terminal may be defective or incompatible. |
| 6-22 | The machine resets the sequence because of an abnormal handshake in the V.34 control channel | ▪ Check for line noise.<br>▪ If the same error occurs frequently, replace the FCU.<br>▪ Defective remote terminal. |
| 6-99 | V.21 signal not stopped within 6 s | ▪ Replace the FCU. |
| 13-17 | SIP user name registration error | ▪ Double registration of the SIP user name.<br>▪ Capacity for user-name registration in the SIP server is not sufficient. |
| 13-18 | SIP server access error | ▪ Incorrect initial setting for the SIP server.<br>▪ Defective SIP server. |
| 13-24 | SIP authentication error | ▪ Registered password in the device does not match the password in the SIP server. |
| 13-25 | Network I/F setting error | ▪ IPV4 is not active in the active protocol setting.<br>▪ IP address of the device is not registered. |
| 13-26 | Network I/F setting error at power on | ▪ Active protocol setting does not match the I/F setting for SIP server.<br>▪ IP address of the device is not registered. |
| 13-27 | IP address setting error | ▪ IP address of the device is not registered. |
| 14-00 | SMTP Send Error | ▪ Error occurred during sending to the SMTP server. Occurs for any error other than 14-01 to 16. For example, the mail address of the system administrator is not registered. |
| 14-01 | SMTP Connection Failed | ▪ Failed to connect to the SMTP server (timeout) |

Error Codes

| Code | Meaning | Suggested Cause/Action |
|---|---|---|
| | | because the server could not be found.<br>▪ The PC is not ready to transfer files.<br>▪ SMTP server not functioning correctly.<br>▪ The DNS IP address is not registered.<br>▪ Network not operating correctly.<br>▪ Destination folder selection not correct. |
| 14-02 | No Service by SMTP Service (421) | ▪ SMTP server operating incorrectly, or the destination for direct SMTP sending is not correct.<br>▪ Contact the system administrator and check that the SMTP server has the correct settings and operates correctly.<br>▪ Contact the system administrator for direct SMTP sending and check the sending destination. |
| 14-03 | Access to SMTP Server Denied (450) | ▪ Failed to access the SMTP server because the access is denied.<br>▪ SMTP server operating incorrectly. Contact the system administrator to determine if there is a problem with the SMTP server and to check that the SMTP server settings are correct.<br>▪ Folder send destination is incorrect. Contact the system administrator to determine that the SMTP server settings and path to the server are correct.<br>▪ Device settings incorrect. Confirm that the user name and password settings are correct.<br>▪ Direct SMTP destination incorrect. Contact the system administrator to determine if there is a problem at the destination at that the settings at the destination are correct. |

| Code | Meaning | Suggested Cause/Action |
|---|---|---|
| 14-04 | Access to SMTP Server Denied (550) | ▪ SMTP server operating incorrectly<br>▪ Direct SMTP sending not operating correctly |
| 14-05 | SMTP Server HDD Full (452) | ▪ Failed to access the SMTP server because the HDD on the server is full.<br>▪ Insufficient free space on the HDD of the SMTP server. Contact the system administrator and check the amount of space remaining on the SMTP server HDD.<br>▪ Insufficient free space on the HDD where the destination folder is located. Contact the system administrator and check the amount of space remaining on the HDD where the target folder is located.<br>▪ Insufficient free space on the HDD at the target destination for SMTP direct sending. Contact the system administrator and check the amount of space remaining on the target HDD. |
| 14-06 | User Not Found on SMTP Server (551) | ▪ The designated user does not exist.<br>▪ The designated user does not exist on the SMTP server.<br>▪ The designated address is not for use with direct SMTP sending. |
| 14-07 | Data Send to SMTP Server Failed (4XX) | ▪ Failed to access the SMTP server because the transmission failed.<br>▪ PC not operating correctly.<br>▪ SMTP server operating incorrectly<br>▪ Network not operating correctly.<br>▪ Destination folder setting incorrect.<br>▪ Direct SMTP sending not operating correctly. |
| 14-08 | Data Send to SMTP Server Failed (5XX) | ▪ Failed to access the SMTP server because the transmission failed. |

Error Codes

| Code | Meaning | Suggested Cause/Action |
|---|---|---|
| | | ▪ SMTP server operating incorrectly<br>▪ Destination folder setting incorrect.<br>▪ Direct SMTP sending not operating correctly.<br>▪ Software application error. |
| 14-09 | Authorization Failed for Sending to SMTP Server | ▪ POP-Before-SMTP or SMTP authorization failed.<br>▪ Incorrect setting for file transfer |
| 14-10 | Addresses Exceeded | ▪ Number of broadcast addresses exceeded the limit for the SMTP server. |
| 14-11 | Buffer Full | ▪ The send buffer is full so the transmission could not be completed. Buffer is full due to using Scan-to-Email while the buffer is being used send mail at the same time. |
| 14-12 | Data Size Too Large | ▪ Transmission was cancelled because the detected size of the file was too large. |
| 14-13 | Send Cancelled | ▪ Processing is interrupted because the user pressed Stop. |
| 14-14 | Security Locked File Error | ▪ Update the software because of the defective software. |
| 14-15 | Mail Data Error | ▪ The transmitting a mail is interrupted via DCS due to the incorrect data.<br>▪ Update the software because of the defective software. |
| 14-16 | Maximum Division Number Error | ▪ When a mail is divided for the mail transmission and the division number of a mail are more than the specified number, the mail transmission is interrupted.<br>▪ Update the software because of the defective software. |

| Code | Meaning | Suggested Cause/Action |
|---|---|---|
| 14-17 | Incorrect Ticket | ▪ Update the software because of the defective software. |
| 14-18 | Access to MCS File Error | ▪ The access to MCS file is denied due to the no permission of access.<br>▪ Update the software because of the defective software. |
| 14-30 | MCS File Creation Failed | Failed to create the MCS file because:<br>▪ The number of files created with other applications on the Document Server has exceeded the limit.<br>▪ HDD is full or not operating correctly.<br>▪ Software error. |
| 14-31 | UFS File Creation Failed | UFS file could not be created:<br>▪ Not enough space in UFS area to handle both Scan-to-Email and IFAX transmission.<br>▪ HDD full or not operating correctly.<br>▪ Software error. |
| 14-32 | Cancelled the Mail Due to Error Detected by NFAX | ▪ Error detected with NFAX and send was cancelled due to a software error. |
| 14-33 | No Mail Address For the Machine | ▪ Neither the mail address of the machine nor the mail address of the network administrator is registered. |
| 14-34 | Address designated in the domain for SMTP sending does not exist | ▪ Operational error in normal mail sending or direct SMTP sending.<br>▪ Check the address selected in the address book for SMTP sending.<br>▪ Check the domain selection. |
| 14-50 | Mail Job Task Error | Due to an FCU mail job task error, the send was cancelled:<br>▪ Address book was being edited during |

Error Codes

| Code | Meaning | Suggested Cause/Action |
|---|---|---|
| | | creation of the notification mail.<br>▪ Software error. |
| 14-51 | UCS Destination Download Error | Not even one return notification can be downloaded:<br>▪ The address book was being edited.<br>▪ The number for the specified destination does not exist (it was deleted or edited after the job was created). |
| 14-60 | Send Cancel Failed | ▪ The cancel operation by the user failed to cancel the send operation. |
| 14-61 | Notification Mail Send Failed for All Destinations | ▪ All addresses for return notification mail failed. |
| 14-62 | Transmission Error due to the existence of zero line page | ▪ When the 0 line page exists in received pages with G3 communication, the transmission is interrupted. |
| 15-01 | POP3/IMAP4 Server Not Registered | ▪ At startup, the system detected that the IP address of the POP3/IMAP4 server has not been registered in the machine. |
| 15-02 | POP3/IMAP4 Mail Account Information Not Registered | ▪ The POP3/IMAP4 mail account has not been registered. |
| 15-03 | Mail Address Not Registered | ▪ The mail address has not been registered. |
| 15-10 | DCS Mail Receive Error | ▪ Error other than 15-11 to 15-18. |
| 15-11 | Connection Error | The DNS or POP3/IMAP4 server could not be found:<br>▪ The IP address for DNS or POP3/IMAP4 server is not stored in the machine.<br>▪ The DNS IP address is not registered.<br>▪ Network not operating correctly. |

| Code | Meaning | Suggested Cause/Action |
|---|---|---|
| 15-12 | Authorization Error | POP3/IMAP4 send authorization failed:<br>▪ Incorrect IFAX user name or password.<br>▪ Access was attempted by another device, such as the PC.<br>▪ POP3/IMAP4 settings incorrect. |
| 15-13 | Receive Buffer Full | ▪ Occurs only during manual reception. Transmission cannot be received due to insufficient buffer space. The buffer is being used for mail send or Scan-to-Email. |
| 15-14 | Mail Header Format Error | ▪ The mail header is not standard format. For example, the Date line description is incorrect. |
| 15-15 | Mail Divide Error | ▪ The e-mail is not in standard format. There is no boundary between parts of the e-mail, including the header. |
| 15-16 | Mail Size Receive Error | ▪ The mail cannot be received because it is too large. |
| 15-17 | Receive Timeout | ▪ May occur during manual receiving only because the network is not operating correctly. |
| 15-18 | Incomplete Mail Received | ▪ Only one portion of the mail was received. |
| 15-31 | Final Destination for Transfer Request Reception Format Error | ▪ The format of the final destination for the transfer request was incorrect. |
| 15-39 | Send/Delivery Destination Error | The transmission cannot be delivered to the final destination:<br>▪ Destination file format is incorrect.<br>▪ Could not create the destination for the file transmission. |
| 15-41 | SMTP Receive Error | ▪ Reception rejected because the transaction exceeded the limit for the “Auth. E-mail RX” |

Error Codes

| Code | Meaning | Suggested Cause/Action |
|---|---|---|
| | | setting. |
| 15-42 | Off Ramp Gateway Error | ▪ The delivery destination address was specified with Off Ramp Gateway OFF. |
| 15-43 | Address Format Error | ▪ Format error in the address of the Off Ramp Gateway. |
| 15-44 | Addresses Over | ▪ The number of addresses for the Off Ramp Gateway exceeded the limit of 30. |
| 15-61 | Attachment File Format Error | ▪ The attached file is not TIFF format. |
| 15-62 | TIFF File Compatibility Error | Could not receive transmission due to:<br>▪ Resolution error<br>▪ Image of resolution greater than 200 dpi without extended memory.<br>▪ Resolution is not supported.<br>▪ Page size error<br>▪ The page size was larger than A3.<br>▪ Compression error<br>▪ File was compressed with other than MH, MR, or MMR. |
| 15-63 | TIFF Parameter Error | The TIFF file sent as the attachment could not be received because the TIFF header is incorrect:<br>▪ The TIFF file attachment is a type not supported.<br>▪ The TIFF file attachment is corrupted.<br>▪ Software error. |
| 15-64 | TIFF Decompression Error | The file received as an attachment caused the TIFF decompression error:<br>▪ The TIFF format of the attachment is corrupted.<br>▪ Software error. |

| Code | Meaning | Suggested Cause/Action |
|---|---|---|
| 15-71 | Not Binary Image Data | ▪ The file could not be received because the attachment was not binary image data. |
| 15-73 | MDN Status Error | ▪ Could not find the Disposition line in the header of the Return Receipt, or there is a problem with the firmware. |
| 15-74 | MDN Message ID Error | ▪ Could not find the Original Message ID line in the header of the Return Receipt, or there is a problem with the firmware. |
| 15-80 | Mail Job Task Read Error | ▪ Could not receive the transmission because the destination buffer is full and the destination could not be created (this error may occur when receiving a transfer request or a request for notification of reception). |
| 15-81 | Repeated Destination Registration Error | ▪ Could not repeat receive the transmission because the destination buffer is full and the destination could not be created (this error may occur when receiving a transfer request or a request for notification of reception). |
| 15-91 | Send Registration Error | Could not receive the file for transfer to the final destination:<br>▪ The format of the final destination or the transfer destination is incorrect.<br>▪ Destinations are full so the final and transfer destinations could not be created. |
| 15-92 | Memory Overflow | ▪ Transmission could not be received because memory overflowed during the transaction. |
| 15-93 | Memory Access Error | ▪ Transaction could not complete due to a malfunction of SAF memory. |
| 15-94 | Incorrect ID Code | ▪ The machine rejected an incoming e-mail for transfer request, because the ID code in the |

Error Codes

| Code | Meaning | Suggested Cause/Action |
|---|---|---|
| | | incoming e-mail did not match the ID code registered in the machine. |
| 15-95 | Transfer Station Function | ▪ The machine rejected an incoming e-mail for transfer because the transfer function was unavailable. |
| 22-00 | Original length exceeded the maximum scan length | ▪ Divide the original into more than one page.<br>▪ Check the resolution used for scanning. Lower the scan resolution if possible.<br>▪ Add optional page memory. |
| 22-01 | Memory overflow while receiving | ▪ Wait for the files in the queue to be sent.<br>▪ Delete unnecessary files from memory.<br>▪ Transfer the substitute reception files to an another fax machine, if the machine's printer is busy or out of order.<br>▪ Add an optional SAF memory card or hard disk. |
| 22-02 | Tx or rx job stalled due to line disconnection at the other end | ▪ The job started normally but did not finish normally; data may or may not have been received fully.<br>▪ Restart the machine. |
| 22-04 | The machine cannot store received data in the SAF | ▪ Update the ROM<br>▪ Replace the FCU. |
| 22-05 | No G3 parameter confirmation answer | ▪ Defective FCU board or firmware. |
| 23-00 | Data read timeout during construction | ▪ Restart the machine.<br>▪ Replace the FCU. |
| 25-00 | The machine software resets itself after a fatal transmission error occurred | ▪ Update the ROM<br>▪ Replace the FCU. |

| Code | Meaning | Suggested Cause/Action |
|---|---|---|
| ⇒ 31-21 | LAN Fax Error | • It was cancelled received LAN Fax images during store the image to SAF of FCU.<br>• The LAN Fax transmission of a message was cancelled by the LAN Fax driver. |
| F0-xx | V.34 modem error | ▪ Replace the FCU. |
| F6-xx | SG3 modem error | ▪ Update the SG3 modem ROM.<br>▪ Replace the SG3 board.<br>▪ Check for line noise or other line problems.<br>▪ Try communicating another V.8/V.34 fax. |

## 3.2 IFAX TROUBLESHOOTING

Use the following procedures to determine whether the machine or another part of the network is causing the problem.

| Communication Route | Item | Action [Remarks] |
|---|---|---|
| General LAN | 1. Connection with the LAN | ▪ Check that the LAN cable is connected to the machine.<br>▪ Check that the LEDs on the hub are lit. |
| | 2. LAN activity | Check that other devices connected to the LAN can communicate through the LAN. |
| Between IFAX and PC | 1. Network settings on the PC | ▪ Check the network settings on the PC.<br>[Is the IP address registered in the TCP/IP properties in the network setup correct? Check the IP address with the administrator of the network.] |
| | 2. Check that PC can connect with the machine | ▪ Use the “ping” command on the PC to contact the machine.<br>[At the MS-DOS prompt, type ping then the IP address of the machine, then press Enter.] |
| | 3. LAN settings in the machine | ▪ Check the LAN parameters<br>▪ Check if there is an IP address conflict with other PCs.<br>[Use the “Network” function in the User Tools. If there is an IP address conflict, inform the administrator.] |
| Between machine and e-mail server | 1. LAN settings in the machine | ▪ Check the LAN parameters<br>▪ Check if there is an IP address conflict with other PCs.<br>[Use the “Network” function in the User Tools. |

| Communication Route | Item | Action [Remarks] |
|---|---|---|
| | | If there is an IP address conflict, inform the administrator.] |
| | 2. E-mail account on the server | ▪ Make sure that the machine can log into the e-mail server.<br>▪ Check that the account and password stored in the server are the same as in the machine.<br>[Ask the administrator to check.] |
| | 3. E-mail server | ▪ Make sure that the client devices which have an account in the server can send/receive e-mail.<br>[Ask the administrator to check.<br>Send a test e-mail with the machine's own number as the destination. The machine receives the returned e-mail if the communication is performed successfully.] |
| Between e-mail server and internet | 1. E-mail account on the Server | ▪ Make sure that the PC can log into the e-mail server.<br>▪ Check that the account and password stored in the server are the same as in the machine.<br>[Ask the administrator to check.] |
| | 2. E-mail server | ▪ Make sure that the client devices which have an account in the server can send/receive e-mail.<br>[Ask the administrator to check.<br>Send a test e-mail with the machine's own number as the destination. The machine receives the returned e-mail if the communication is performed successfully.] |

IFAX Troubleshooting

| Communication Route | Item | Action [Remarks] |
|---|---|---|
| | 3. Destination e-mail address | ▪ Make sure that the e-mail address is actually used.<br>▪ Check that the e-mail address contains no incorrect characters such as spaces. |
| | 4. Router settings | ▪ Use the “ping” command to contact the router.<br>▪ Check that other devices connected to the router can sent data over the router.<br>[Ask the administrator of the server to check.] |
| | 5. Error message by e-mail from the network of the destination. | ▪ Check whether e-mail can be sent to another address on the same network, using the application e-mail software.<br>▪ Check the error e-mail message.<br>[Inform the administrator of the LAN.] |

# 3.3 IP-FAX TROUBLESHOOTING

## 3.3.1 IP-FAX TRANSMISSION

### *Cannot send by IP Address/Host Name*

| Check Point | | Action |
|---|---|---|
| 1 | LAN cable connected? | Check the LAN cable connection. |
| 2 | Specified IP address/host name correct? | Check the IP address/host name. |
| 3 | Firewall/NAT is installed? | Cannot breach the firewall. Send by using another method (Fax, Internet Fax) |
| 4 | Transmission sent manually? | Manual sending not supported. |
| 5 | IP address of local machine registered? | Register the IP address. |
| 6 | Remote terminal port number setting other than 1720? | Send by specifying the port number. |
| 7 | Specified port number correct? | Confirm the port number of the remote fax. |
| 8 | DNS server registered when host name specified? | Contact the network administrator. |
| 9 | Remote fax a T.38 terminal? | Check whether the remote fax is a T38 terminal. |
| 10 | Remote fax switched off or busy? | Check that the remote fax is switched on. |
| 11 | Network bandwidth too narrow? | Request the network administrator to increase the bandwidth. |
| | | Raise the delay level.<br>IPFAX SW 01 Bit 0 to 3 |

| | | |
|---|---|---|
| | | IP-Fax bandwidth is the same as the DCS speed. Set IP-Fax SW00 Bit 6 to 1. |
| 12 | Remote fax cancelled transmission? | Check whether the remote fax cancelled the transmission. |

### *Cannot send via VoIP Gateway*

| Check Point | | Action |
|---|---|---|
| 1 | LAN cable connected? | Check the LAN cable connection. |
| 2 | VoIP Gateway T.38 standard? | Contact the network administrator. |
| 3 | VoIP Gateway installed correctly? | Contact the network administrator. |
| 4 | VoIP Gateway power switched on? | Contact the network administrator. |
| 5 | Is the IP address/host name of the specified Gateway correct? | Check the IP address/host name. |
| 6 | Number of the specified fax correct? | Check the remote fax number. |
| 7 | Firewall/NAT is installed? | Cannot breach the firewall. Send by using another method (Fax, Internet Fax) |
| 8 | Transmission sent manually? | Manual sending not supported. |
| 9 | IP address of local fax registered? | Register the IP address. |
| 10 | DNS registered when host name specified? | Contact the network administrator. |
| 11 | Remote fax a G3 fax? | Check that the remote fax is a G3 fax. |
| 12 | G3 fax is connected to VoIP gateway? | Check that G3 fax is connected. |
| 13 | Remote G3 fax turned on? | Check that G3 fax is switched on. |

| | | |
|---|---|---|
| 14 | Network bandwidth too narrow? | Request the network administrator to increase the bandwidth. |
| | | Raise the network delay level.<br>IPFAX SW 01 Bit 0 to 3 |
| | | IP-Fax bandwidth is the same as the DCS speed. Set IP-Fax SW00 Bit 6 to 1. |

### *Cannot send by Alias Fax number.*

| Check Point | | Action |
|---|---|---|
| 1 | LAN cable connected? | Check the LAN cable connection. |
| 2 | Number of specified Alias fax correct? | Confirm the Alias of the remote fax.<br>Error Code: 13-14 |
| 3 | Firewall/NAT installed? | Cannot breach the firewall. Send by using another method (Fax, Internet Fax) |
| 4 | Transmission sent manually? | Manual sending not supported. |
| 5 | Gatekeeper installed correctly? | Contact the network administrator. |
| 6 | Gatekeeper power switched on? | Contact the network administrator. |
| 7 | IP address/host name of Gatekeeper correct? | Check the IP address/host name. |
| 8 | DNS server registered when Gatekeeper host name specified? | Contact the network administrator. |
| 9 | Enable H.323 SW is set to on? | Check the settings.<br>See User Parameter SW 34 Bit 0 |
| 10 | IP address of local fax registered? | Register the IP address of the local fax. |

| | | |
|---|---|---|
| 11 | Alias number of local fax registered? | Register the Alias number of the local fax. |
| 12 | Remote fax registered in Gatekeeper? | Contact the network administrator. |
| 13 | Remote fax a T.38 terminal? | Check whether the remote fax is a T38 terminal. |
| 14 | Remote fax switched off or busy? | Contact the network administrator. |
| 15 | Network bandwidth too narrow? | Request the system administrator to increase the bandwidth. |
| | | Raise the delay level.<br>IPFAX SW 01 Bit 0 to 3 |
| | | Lower the modem transmission baud rate.<br>IPFAX SW 05 |
| 16 | Remote fax cancelled transmission? | Check whether the remote fax cancelled the transmission. |

## 3.3.2 IP-FAX RECEPTION

### *Cannot receive via IP Address/Host Name.*

| Check Point | | Action |
|---|---|---|
| 1 | LAN cable connected? | Check the LAN cable connection. |
| 2 | Firewall/NAT is installed? | Cannot breach the firewall. Send by using another method (Fax, Internet Fax) |
| 3 | IP address of local fax registered? | Register the IP address. |
| 4 | Port number specified at remote sender fax (if required)? | Request the sender to specify the port number. |
| 5 | Specified port number correct (if required)? | Request the sender to check the port number. |
| 6 | DNS server registered when host name specified on sender side? | Contact the network administrator.<br>Note<br>▪ The sender machine displays this error code if the sender fax is a Ricoh model. |
| 7 | Network bandwidth too narrow? | Request the system administrator to increase the bandwidth. |
| | | Lower the start modem reception baud rate on the receiving side.<br>IPFAX SW06 |
| 8 | Remote fax cancelled transmission? | Check whether the remote fax cancelled the transmission. |

### *Cannot receive by VoIP Gateway.*

IP-Fax Troubleshooting

| Check Point | | Action |
|---|---|---|
| 1 | LAN cable connected? | Check the LAN cable connection. |
| 2 | Firewall/NAT is installed? | Cannot breach the firewall. Request the remote fax to send by using another method (Fax, Internet Fax) |
| 3 | VoIP Gateway installed correctly? | Contact the network administrator. |
| 4 | VoIP Gateway power switched on? | Contact the network administrator. |
| 5 | IP address/host name of specified VoIP Gateway correct on sender's side? | Request the remote fax to check the IP address/host name. |
| 6 | DNS server registered when host name specified on sender side? | Contact the network administrator. |
| 7 | Network bandwidth too narrow? | Request the network administrator to increase the bandwidth. |
| 8 | G3 fax connected? | Check that G3 fax is connected. |
| 9 | G3 fax power switched on? | Check that G3 fax is switched on. |

### *Cannot receive by Alias Fax number.*

| Check Point | | Action |
|---|---|---|
| 1 | LAN cable connected? | Check the LAN cable connection. |
| 2 | Firewall/NAT is installed? | Cannot the breach firewall. Request the remote fax to send by using another method (Fax, Internet Fax) |
| 3 | Gatekeeper installed correctly? | Contact the network administrator.<br>Note<br>▪ The sender machine displays this error code when the sender fax is a Ricoh model. |

| | | |
|---|---|---|
| 4 | Power to Gatekeeper switched on? | Contact the network administrator.<br>Note<br>▪ The sender machine displays this error code when the sender fax is a Ricoh model. |
| 5 | IP address/host name of Gatekeeper correct on the sender's side? | Request the sender to check the IP address/host name.<br>Note<br>▪ The sender machine displays this error code when the sender fax is a Ricoh model. |
| 6 | DNS server registered when Gatekeeper host name specified on sender's side? | Contact the network administrator.<br>Note<br>▪ The sender machine displays this error code when the sender fax is a Ricoh model. |
| 7 | Enable H.323 SW is set to on? | Request the sender to check the settings.<br>User Parameter SW 34 Bit 0<br>Note<br>▪ Only if the remote sender fax is a Ricoh fax. |
| 8 | Local fax IP address registered? | Register the IP address. |
| 9 | Local fax Alias number registered? | Register the Alias number. |
| 10 | Network bandwidth too narrow? | Request the system administrator to increase the bandwidth. |
| | | Lower the start modem reception baud rate on the receiving side.<br>IPFAX SW06 |
| 11 | Remote fax cancelled transmission? | Check whether the remote fax cancelled the transmission. |
| 12 | Local fax registered in Gatekeeper? | Contact the network administrator. |

| | | |
|---|---|---|
| | | Note<br>▪ The sender machine displays this error code when the sender fax is a Ricoh model. |

# 4. SERVICE TABLE

## 4.1 BEFOREHAND

**CAUTION**

- Never turn off the main power switch when the power LED is lit or flashing. To avoid damaging the hard disk or memory, press the operation power switch to switch the power off, wait for the power LED to go off, and then switch the main power switch off.

**Note**

- The main power LED (⏻) lights or flashes while the platen cover or ARDF is open, while the main machine is communicating with a facsimile or the network server, or while the machine is accessing the hard disk or memory for reading or writing data.

# 4.2 SERVICE TABLES

## 4.2.1 SP1-XXX (BIT SWITCHES)

☛ Bit Switches

| 1 | Mode No. | | Function |
|---|---|---|---|
| 101 | System Switch | | |
| | 001 – 032 | 00 – 1F | Change the bit switches for system settings for the fax option<br>☛ "Bit Switches" |
| 102 | Ifax Switch | | |
| | 001 – 016 | 00 – 0F | Change the bit switches for internet fax settings for the fax option<br>☛ "Bit Switches" |
| 103 | Printer Switch | | |
| | 001 – 016 | 00 – 0F | Change the bit switches for printer settings for the fax option<br>☛ "Bit Switches" |
| 104 | Communication Switch | | |
| | 001 – 032 | 00 – 1F | Change the bit switches for communication settings for the fax option<br>☛ "Bit Switches" |
| 105 | G3-1 Switch | | |
| | 001 – 016 | 00 – 0F | Change the bit switches for the protocol settings of the standard G3 board<br>☛ "Bit Switches" |

| | | | |
|---|---|---|---|
| 106 | G3-2 Switch | | |
| | 001 – 016 | 00 – 0F | Change the bit switches for the protocol settings of the optional G3 board<br>☛ "Bit Switches" |
| 107 | G3-3 Switch | | |
| | 001 – 016 | 00 – 0F | Change the bit switches for the protocol settings of the optional G3 board<br>☛ "Bit Switches" |
| 108 | G4 Internal Switch | | |
| | 001 – 032 | 00 – 1F | **Not used** (Do not change the bit switches) |
| 109 | G4 Parameter Switch | | |
| | 001 – 016 | 00 – 0F | **Not used** (Do not change the bit switches) |
| 111 | IP fax Switch | | |
| | 001 – 016 | 00 – 0F | Change the bit switches for optional IP fax parameters<br>☛ "Bit Switches" |

## 4.2.2 SP2-XXX (RAM DATA)

| 2 | Mode No. | | Function |
|---|---|---|---|
| 101 | RAM Read/Write | | |
| | 001 | | Change RAM data for the fax board directly. ☛ "Service RAM Addresses" |
| 102 | Memory Dump | | |
| | 001 | G3-1 Memory Dump | Print out RAM data for the fax board. ☛ "Service RAM Addresses" |
| | 002 | G3-2 Memory Dump | Print out RAM data for the optional SG3 board. |
| | 003 | G3-3 Memory Dump | Print out RAM data for the optional SG3 board. |
| | 004 | G4 Memory Dump | Not used |
| 103 | G3-1 NCU Parameters | | |
| | 001 – 023 | CC, 01 – 22 | NCU parameter settings for the standard G3 board. ☛ "NCU Parameters" |
| 104 | G3-2 NCU Parameters | | |
| | 001 – 023 | CC, 01 – 22 | NCU parameter settings for the optional G3 board. ☛ "NCU Parameters" |
| 105 | G3-3 NCU Parameters | | |
| | 001 – 023 | CC, 01 – 22 | NCU parameter settings for the optional G3 board. ☛ "NCU Parameters" |

## 4.2.3 SP3-XXX (TEL LINE SETTINGS)

| 3 | Mode No. | | Function |
|---|---|---|---|
| 101 | Service Station | | |
| | 001 | Fax Number | Enter the fax number of the service station. |
| | 002 | Select Line | Select the line type. |
| 102 | Serial Number | | |
| | 000 | | Enter the fax unit's serial number. |
| 103 | PSTN-1 Port Settings | | |
| | 001 | Select Line | Select the line type setting for the G3-1 line. If the machine is installed on a PABX line, select "PABX", "PABX(GND)" or "PABX(FLASH)". |
| | 002 | PSTN Access Number | Enter the PSTN access number for the G3-1 line. |
| | 003 | Memory Lock Disabled | Not used |
| 104 | PSTN-2 Port Settings | | |
| | 001 | Select Line | Select the line setting for the G3-2 line. If the machine is installed on a PABX line, select "PABX", "PABX(GND)" or "PABX(FLASH)". |
| | 002 | PSTN Access Number | Enter the PSTN access number for the G3-2 line. |
| | 003 | Memory Lock Disabled | Not used |
| | 004 | Transmission Disabled | If you turn this SP on, the machine does not send any fax messages on the G3-2 line. |

| | | | |
|---|---|---|---|
| 105 | PSTN-3 Port Settings | | |
| | 001 | Select Line | Select the line setting for the G3-3 line. If the machine is installed on a PABX line, select “PABX”, “PABX(GND)” or “PABX(FLASH)”. |
| | 002 | PSTN Access Number | Enter the PSTN access number for the G3-3 line. |
| | 003 | Memory Lock Disabled | Not used |
| | 004 | Transmission Disabled | If you turn this SP on, the machine does not send any fax messages on the G3-3 line. |
| 106 | ISDN Port Settings | | |
| | 001 | Select Line | **Not used** (Do not change the settings.) |
| | 002 | PSTN Access Number | |
| | 003 | Memory Lock Disabled | |
| 106 | 004 | Transmission Disabled | |
| 107 | IPFAX Port Settings | | |
| | 001 | H323 Port | Sets the H323 port number. |
| | 002 | SIP Port | Sets the SIP port number. |
| | 003 | RAS Port | Sets the RAS port number. |
| | 004 | Gatekeeper port | Sets the Gatekeeper port number. |
| | 005 | T.38 Port | Sets the T.38 port number. |
| | 006 | SIP Server Port | Sets the SIP port number. |
| | 007 | IPFAX Protocol | Select "H323" or "SIP". |

| | | | |
|---|---|---|---|
| | | Priority | |
| 201 | FAX SW | | |
| | 001 – 032 | 00 – 1F | |

## 4.2.4 SP4-XXX (ROM VERSIONS)

| **4** | Mode No. | | Function |
|---|---|---|---|
| 101 | 001 | FCU ROM Version | Displays the FCU ROM version. |
| 102 | 001 | Error Codes | Displays the latest 64 fax error codes. |
| 103 | 001 | G3-1 ROM Version | Displays the G3-1 modem version. |
| 104 | 001 | G3-2 ROM Version | Displays the G3-2 modem version. |
| 105 | 001 | G3-3 ROM Version | Displays the G3-3 modem version. |
| 106 | 001 | G4 ROM Version | **Not used** (Do not change the settings.) |
| 107 | 001 | Charge ROM Version | **Not used** (Do not change the settings.) |

## 4.2.5 SP5-XXX (INITIALIZING)

| 5 | Mode No. | Function |
|---|---|---|
| 101 | Initialize SRAM | |
| | 000 | Initializes the bit switches and user parameters, user data in the SRAM, files in the SAF memory, and clock. |
| 102 | Erase All Files | |
| | 000 | Erases all files stored in the SAF memory. |
| 103 | Reset Bit Switches | |
| | 000 | Resets the bit switches and user parameters. |
| 104 | Factory setting | |
| | 000 | Resets the bit switches and user parameters, user data in the SRAM and files in the SAF memory. |
| 105 | Initialize All Bit Switches | |
| | 000 | Initializes all the current bit switch settings. |
| 106 | Initialize Security Bit Switches | |
| | 000 | Initializes only the security bit switches. If you select automatic output/display for the user parameter switches, the security settings are initialized. |

## 4.2.6 SP6-XXX (REPORTS)

| 6 | Mode No. | | Function |
|---|---|---|---|
| 101 | System Parameter List | | |
| | 000 | - | Touch the “ON” button to print the system parameter list. |
| 102 | Service Monitor Report | | |
| | 000 | - | Touch the “ON” button to print the service monitor report. |
| 103 | G3 Protocol Dump List | | |
| | 001 | G3 All Communications | Prints the protocol dump list of all communications for all G3 lines. |
| | 002 | G3-1 (All Communications) | Prints the protocol dump list of all communications for the G3-1 line. |
| | 003 | G3-1 (1 Communication) | Prints the protocol dump list of the last communication for the G3-1 line. |
| | 004 | G3-2 (All Communications) | Prints the protocol dump list of all communications for the G3-2 line. |
| | 005 | G3-2 (1 Communication) | Prints the protocol dump list of the last communication for the G3-2 line. |
| | 006 | G3-3 (All Communications) | Prints the protocol dump list of all communications for the G3-3 line. |
| | 007 | G3-3 (1 Communication) | Prints the protocol dump list of the last communication for the G3-3 line. |
| 104 | G4 Protocol Dump List | | |
| | 001 | Dch + Bch 1 | **Not used** (Do not change the settings.) |

| | | | |
|---|---|---|---|
| | 002 | Dch | |
| | 003 | Bch 1 Link Layer | |
| | 004 | Dch Link Layer | |
| | 005 | Dch +Bch 2 | |
| | 006 | Bch 2 Link Layer | |
| 105 | All Files print out | | |
| | 000 | - | Prints out all the user files in the SAF memory, including confidential messages.<br>Note<br>▪ Do not use this function, unless the customer is having trouble printing confidential messages or recovering files stored using the memory lock feature. |
| 106 | Journal Print out | | |
| | 001 | All Journals | The machine prints all the communication records on the report. |
| | 002 | Specified Date | The machine prints all communication records after the specified date. |
| 107 | Log List Print out | | |
| | 001 | All log files | These log print out functions are for designer use only. |
| | 002 | Printer | |
| | 003 | SC/TRAP Stored | |
| | 004 | Decompression | |
| | 005 | Scanner | |
| | 006 | JOB/SAF | |

| | | | |
|---|---|---|---|
| | 007 | Reconstruction | |
| | 008 | JBIG | |
| | 009 | Fax Driver | |
| | 010 | G3CCU | |
| | 011 | Fax Job | |
| | 012 | CCU | |
| | 013 | Scanner Condition | |
| 108 | IP Protocol Dump List | | |
| | 001 | All Communications | Prints the protocol dump list of all communications for the IP fax line. |
| | 002 | 1 Communication | Prints the protocol dump list of the last communication for the IP fax line. |

## 4.2.7 SP7-XXX (TEST MODES)

These are the test modes for PTT approval.

| 7 | Function |
|---|---|
| 101 | G3-1 Modem Tests |
| 102 | G3-1 DTMF Tests |
| 103 | Ringer Test |
| 104 | G3-1 V34 (S2400baud) |
| 105 | G3-1 V34 (S2800baud) |
| 106 | G3-1 V34 (S3000baud) |
| 107 | G3-1 V34 (S3200baud) |
| 108 | G3-1 V34 (S3429baud) |
| 109 | Recorded Message Test |
| 110 | G3-2 Modem Tests |
| 111 | G3-2 DTMF Tests |
| 112 | G3-2 V34 (S2400baud) |
| 113 | G3-2 V34 (S2800baud) |
| 114 | G3-2 V34 (S3000baud) |
| 115 | G3-2 V34 (S3200baud) |
| 116 | G3-2 V34 (S3429baud) |
| 117 | G3-3 Modem Tests |
| 118 | G3-3 DTMF Tests |
| 119 | G3-3 V34 (S2400baud) |
| 120 | G3-3 V34 (S2800baud) |

| | |
|---|---|
| 121 | G3-3 V34 (S3000baud) |
| 122 | G3-3 V34 (S3200baud) |
| 123 | G3-3 V34 (S3429baud) |
| 124 | IG3-1 Modem Tests - **Not used** |
| 125 | IG3-1 DTMF Tests - **Not used** |
| 126 | IG3-1 V34 (S2400baud) - **Not used** |
| 127 | IG3-1 V34 (S2800baud) - **Not used** |
| 128 | IG3-1 V34 (S3000baud) - **Not used** |
| 129 | IG3-1 V34 (S3200baud) - **Not used** |
| 130 | IG3-1 V34 (S3429baud) - **Not used** |
| 131 | IG3-2 Modem Tests - **Not used** |
| 132 | IG3-2 DTMF Tests - **Not used** |
| 133 | IG3-2 V34 (S2400baud) - **Not used** |
| 134 | IG3-2 V34 (S2800baud) - **Not used** |
| 135 | IG3-2 V34 (S3000baud) - **Not used** |
| 136 | IG3-2 V34 (S3200baud) - **Not used** |
| 137 | IG3-2 V34 (S3429baud) - **Not used** |

# 4.3 BIT SWITCHES

**WARNING**

- Do not adjust a bit switch or use a setting that is described as “Not used”, as this may cause the machine to malfunction or to operate in a manner that is not accepted by local regulations. Such bits are for use only in other areas, such as Japan.

Note

- Default settings for bit switches are not listed in this manual. Refer to the System Parameter List printed by the machine.

## 4.3.1 SYSTEM SWITCHES

| **System Switch 00 [SP No. 1-101-001]** | | |
|---|---|---|
| **No** | **FUNCTION** | **COMMENTS** |
| 0 | Dedicated transmission parameter programming<br>0: Disabled, 1: Enabled | Set this bit to 1 before changing any dedicated transmission parameters.<br>Reset this bit to 0 after programming dedicated transmission parameters. |
| 1 | **Not used** | Do not change |
| 2 | Technical data printout on the Journal<br>0: Disabled<br>1: Enabled | 1: Instead of the personal name, the following data are listed on the Journal for each G3 communication. |
| | e.g. 0000 (1) // 32 (2) V34 (3) // 288 (4) // 264 (5) // L0100 (6) 03 (7) 04 (8)<br>(1): EQM value (Line quality data). A larger number means more errors.<br>(2): Symbol rate (V.34 only)<br>(3): Final modem type used<br>(4): Starting data rate (for example, 288 means 28.8 kbps)<br>(5): Final data rate<br>(6): Rx revel (refer to the note after this table for how to read the rx level)<br>(7): Total number of error lines that occurred during non-ECM reception. | |

| | | |
|---|---|---|
| | (8): Total number of burst error lines that occurred during non-ECM reception.<br>Note<br>▪ EQM and rx level are fixed at “FFFF” in tx mode.<br>▪ The seventh and eighth numbers are fixed at “00” for transmission records and ECM reception records. | |
| | Rx level calculation<br>Example: 0000 // 32 V34 // 288/264 // L 01 00 03 04<br>The four-digit hexadecimal value (N) after “L” indicates the rx level.<br>The high byte is given first, followed by the low byte. Divide the decimal value of N by -16 to get the rx level.<br>In the above example, the decimal value of N (= 0100 [H]) is 256.<br>So, the actual rx level is 256/-16 = -16 dB | |
| 3 | **Not used** | Do not change this setting. |
| 4 | Line error mark print<br>0: OFF, 1: ON (print) | When "1" is selected, a line error mark is printed on the printout if a line error occurs during reception. |
| 5 | G3/G4 communication parameter display<br>0: Disabled<br>1: Enabled | This is a fault-finding aid. The LCD shows the key parameters (see below). This is normally disabled because it cancels the CSI display for the user.<br>Be sure to reset this bit to 0 after testing. |
| 6 | Protocol dump list output after each communication<br>0: Off<br>1: On | This is only used for communication troubleshooting. It shows the content of the transmitted facsimile protocol signals. Always reset this bit to 0 after finishing testing.<br>If system switch 09 bit 6 is at “1”, the list is only printed if there was an error during the communication. |
| 7 | Not used | Do not change the setting. |

| |
|---|
| **System Switch 01 - Not used** (Do not change the factory settings.) |

Bit Switches

| System Switch 02 [SP No. 1-101-003] | | |
|---|---|---|
| **No** | **FUNCTION** | **COMMENTS** |
| 0-1 | **Not used** | Do not change these settings. |
| 2 | Force after transmission stall<br>0: Off<br>1: On | With this setting on, the machine resets itself automatically if a transmission stalls and fails to complete the job. |
| 3 | **Not used** | Do not change these settings. |
| 4 | File retention time<br>0: Depends on User Parameter 24 [18(H)]<br>1: No limit (until the year 2126) | 1: A file that had a communication error will not be erased unless the communication is successful. |
| 5 | **Not used** | Do not change this setting. |
| 6-7 | Memory read/write by RDS<br>Bit 7: 0, Bit 6: 0<br>Always disabled<br>Bit 7: 0, Bit 6: 1<br>User selectable<br>Bit 7: 1, Bit 6: 0<br>User selectable<br>Bit 7: 1, Bit 6: 1<br>Always enabled | (0,0): All RDS systems are always locked out.<br>(0,1), (1,0): Normally, RDS systems are locked out, but the user can temporarily switch RDS on to allow RDS operations to take place. RDS will automatically be locked out again after a certain time, which is stored in System Switch 03. Note that if an RDS operation takes place, RDS will not switch off until this time limit has expired.<br>(1,1): At any time, an RDS system can access the machine. |

| System Switch 03 [SP No. 1-101-004] | | |
|---|---|---|
| **No** | **FUNCTION** | **COMMENTS** |
| 0-7 | Length of time that RDS is temporarily switched on when bits 6 and 7 of System Switch | 00 - 99 hours (BCD).<br>This setting is only valid if bits 6 and 7 of System Switch 02 are set to “User selectable”. |

| | | |
|---|---|---|
| | 02 are set to “User selectable” | The default setting is 24 hours. |

| System Switch 04 [SP No. 1-101-005] | | |
|---|---|---|
| **No** | **FUNCTION** | **COMMENTS** |
| 0-2 | **Not used** | Do not change these settings. |
| 3 | Printing dedicated tx parameters on Quick/Speed Dial Lists<br>0: Disabled<br>1: Enabled | 1: Each Quick/Speed dial number on the list is printed with the dedicated tx parameters. |
| 4-7 | **Not used** | Do not change these settings. |

| |
|---|
| **System Switch 05 - Not used** (Do not change the factory settings.) |
| **System Switch 06 - Not used** (Do not change the factory settings.) |
| **System Switch 07 - Not used** (Do not change the factory settings.) |
| **System Switch 08 - Not used** (Do not change the factory settings.) |

| System Switch 09 [SP No. 1-101-010] | | |
|---|---|---|
| **No** | **FUNCTION** | **COMMENTS** |
| 0 | Addition of image data from confidential transmissions on the transmission result report<br>0: Disabled 1: Enabled | If this feature is enabled, the top half of the first page of confidential messages will be printed on transmission result reports. |
| 1 | Inclusion of communications on the Journal when no image data was exchanged.<br>0: Disabled 1: Enabled | 0: Communications that reached phase C (message tx/rx) of the T.30 protocol are listed on the Journal.<br>1: Communications that reached phase A (call setup) of T.30 protocol are listed on the Journal. |

Bit Switches

| | | |
|---|---|---|
| | | This will include telephone calls. |
| 2 | Automatic error report printout<br>0: Disabled 1: Enabled | 0: Error reports will not be printed.<br>1: Error reports will be printed automatically after failed communications. |
| 3 | Printing of the error code on the error report<br>0: No 1: Yes | 1: Error codes are printed on the error reports. |
| 4 | **Not used** | Do not change this setting. |
| 5 | Power failure report<br>0: Disabled 1: Enabled | 1: A power failure report will be automatically printed after the power is switched on if a fax message disappeared from the memory when the power was turned off last. |
| 6 | Conditions for printing the protocol dump list<br>0: Print for all communications<br>1: Print only when there is a communication error | This switch becomes effective only when system switch 00 bit 6 is set to 1.<br>1: Set this bit to 1 when you wish to print a protocol dump list only for communications with errors. |
| 7 | Priority given to various types of remote terminal ID when printing reports<br>0: RTI > CSI > Dial label > Tel. Number<br>1: Dial label > Tel. number > RTI > CSI | This bit determines which set of priorities the machine uses when listing remote terminal names on reports.<br>Dial Label: The name stored, by the user, for the Quick/Speed Dial number. |

**System Switch 0A [SP No. 1-101-011]**

| No | FUNCTION | COMMENTS |
|---|---|---|
| 0 | Automatic port selection<br>0: Disabled, 1: Enabled | When "1" is selected, a suitable port is automatically selected if the selected port is not used. |

| | | |
|---|---|---|
| 1-3 | **Not used** | Do not change these settings. |
| 4 | Dialing on the ten-key pad when the external telephone is off-hook<br>0: Disabled 1: Enabled | 0: Prevents dialing from the ten-key pad while the external telephone is off-hook. Use this setting when the external telephone is not by the machine, or if a wireless telephone is connected as an external telephone.<br>1: The user can dial on the machine's ten-key pad when the handset is off-hook. |
| 5 | On hook dial<br>0: Disabled 1: Enabled | 0: On hook dial is disabled. |
| 6-7 | **Not used** | Do not change the factory settings |

| |
|---|
| **System Switch 0B - Not used** (Do not change the factory settings.) |
| **System Switch 0C - Not used** (Do not change the factory settings.) |
| **System Switch 0D - Not used** (Do not change the factory settings.) |

| **System Switch 0E [SP No. 1-101-015]** | | |
|---|---|---|
| **No** | **FUNCTION** | **COMMENTS** |
| 0-1 | **Not used** | Do not change the settings. |
| 2 | Enable/disable for direct sending selection<br>0: Direct sending off<br>1: Direct sending on | Direct sending cannot operate when the capture function is on during sending. Setting this switch to "1" enables direct sending without capture. Setting this switch to "0" masks the direct sending function on the operation panel so it cannot be selected. |
| 3 | Action when the external handset goes off-hook<br>0: Manual tx and rx operation<br>1: Memory tx and rx operation (the display remains the same) | 0: Manual tx and rx are possible while the external handset is off-hook. However, memory tx is not possible.<br>1: The display stays in standby mode even when the external handset is used, so that other people can use the machine for memory tx operation. |

Bit Switches

| | | |
|---|---|---|
| | | Note that manual tx and rx are not possible with this setting. |
| 4-7 | **Not used** | Do not change these settings. |

**System Switch 0F [SP No. 1-101-016]**

| No | FUNCTION | | COMMENTS |
|---|---|---|---|
| 0-7 | Country/area code for functional settings (Hex) | | This country/area code determines the factory settings of bit switches and RAM addresses. However, it has no effect on the NCU parameter settings and communication parameter RAM addresses.<br>**Cross reference**<br>NCU country code:<br>SP No. 2-103-001 for G3-1<br>SP No. 2-104-001 for G3-2<br>SP No. 2-105-001 for G3-3 |
| | 00: France | 11: USA | |
| | 01: Germany | 12: Asia | |
| | 02: UK | 12: Asia | |
| | 03: Italy | 13: Japan | |
| | 04: Austria | 14: Hong Kong | |
| | 05: Belgium | 15: South Africa | |
| | 06: Denmark | 16: Australia | |
| | 07: Finland | 17: New Zealand | |
| | 08: Ireland | 18: Singapore | |
| | 09: Norway | 19: Malaysia | |
| | 0A: Sweden | 1A: China | |
| | 0B: Switzerland | 1B: Formosa | |

| | | | |
|---|---|---|---|
| | 0C: Portugal | 1C: Korea | |
| | 0D: Netherland | 20: Turkey | |
| | 0E: Spain | 21: Greece | |
| | 0F: Israel | 22: Hungary | |
| | 10: --- | 23: Czech | |
| | 11: USA | 24: Poland | |

| **System Switch 10 [SP No. 1-101-017]** | | |
|---|---|---|
| **No** | **FUNCTION** | **COMMENTS** |
| 0-7 | Threshold memory level for parallel memory transmission | Threshold = N x 128 KB + 256 KB<br>N can be between 00 - FF(H)<br>Default setting: 02(H) = 512 KB |

| **System Switch 11 [SP No. 1-101-018]** | | |
|---|---|---|
| **No** | **FUNCTION** | **COMMENTS** |
| 0 | TTI printing position<br>0: Superimposed on the page data<br>1: Printed before the data leading edge | Change this bit to 1 if the TTI overprints information that the customer considers to be important (G3 transmissions). |
| 1 | **Not used** | Japan Only |
| 2 | **Not used** | Do not change the factory settings. |
| 3 | TTI printing type<br>0: Address unit<br>1: File unit | TTI printing unit can be selected. |
| 4-6 | **Not used** | Do not change the factory settings. |
| 7 | **Not used** | Japan Only |

Bit Switches

| System Switch 12 [SP No. 1-101-019] | | |
|---|---|---|
| **No** | **FUNCTION** | **COMMENTS** |
| 0-7 | TTI printing position in the main scan direction | TTI: 08 to 92 (BCD) mm<br>Input even numbers only.<br>This setting determines the print start position for the TTI from the left edge of the paper. If the TTI is moved too far to the right, it may overwrite the file number which is on the top right of the page. On an A4 page, if the TTI is moved over by more than 50 mm, it may overwrite the page number. |

| |
|---|
| **System Switch 13 - Not used** (do not change these settings) |
| **System Switch 14 - Not used** (do not change these settings) |

| System Switch 15 [SP No. 1-101-022] | | |
|---|---|---|
| **No** | **FUNCTION** | **COMMENTS** |
| 0 | **Not used** | Do not change the settings. |
| 1 | Going into the Energy Saver mode automatically<br>0: Enabled<br>1: Disabled | 1: The machine will restart from the Energy Saver mode quickly, because the +5V power supply is active even in the Energy Saver mode. |
| 2-3 | **Not used** | Do not change these settings. |
| 4-5 | Interval for preventing the machine from entering Energy Saver mode if there is a pending transmission file.<br>Bit 5: 0, Bit 4: 0<br>1 min<br>Bit 5: 0, Bit 4: 1 | If there is a file waiting for transmission, the machine does not go to Energy Saver mode during the selected period.<br>After transmitting the file, if there is no file waiting for transmission, the machine goes to the Energy Saver mode. |

| | | |
|---|---|---|
| | 30 min1<br>Bit 5: 1, Bit 4: 0<br>1 hour<br>Bit 5: 1, Bit 4: 1<br>24 hours | |
| 6-7 | **Not used** | Do not change |

**System Switch 16 [SP No. 1-101-023]**

| No | FUNCTION | COMMENTS |
|---|---|---|
| 0 | Parallel Broadcasting<br>0: Disabled<br>1: Enabled | 1: The machine sends messages simultaneously using all available ports during broadcasting. |
| 1 | Priority setting for the G3 line.<br>0: PSTN-1 > PSTN-2 or 3<br>1: PSTN-2 or 3 > PSTN-1 | This function allows the user to select the default G3 line type. The optional SG3 unit(s) are required to use the PSTN-2 or 3 setting. |
| 2-7 | **Not used** | Do not change these settings. |

| |
|---|
| **System Switch 17 - Not used** (do not change these settings) |
| **System Switch 18 - Not used** (do not change these settings) |

**System Switch 19 [SP No. 1-101-026]**

| No | FUNCTION | COMMENTS |
|---|---|---|
| 0-5 | **Not used** | Do not change the settings. |
| 6 | Extended scanner page memory after memory option is installed<br>0: Disabled | 0: After installing the memory expansion option, the scanner page memory is extended to 4 MB from 2 MB.<br>1: If this bit is set to 1 after installing the memory |

Bit Switches

| | | |
|---|---|---|
| | 1: Enabled | expansion option, the scanner page memory is extended to 12 MB. But the SAF memory decreases to 18 MB. |
| 7 | Special Original mode<br>0: Disabled<br>1: Enabled | 1: If the customer frequently wishes to transmit a form or letterhead which has a colored or printed background, change this bit to “1”. “Original 1” and “Original 2” can be selected in addition to the “Text”, “Text/Photo” and “Photo” modes. |

| **System Switch 1A [SP No. 1-101-027]** | | | |
|---|---|---|---|
| **No.** | **FUNCTION** | **COMMENTS** | |
| 0-7 | LS RX memory remaining refresh value setting | Sets a value of 4K.<br>If the amount of memory remaining falls below 4K, documents received in memory are printed to create more space in memory.<br>Initial value: 0x80 (512K)<br>00-FF (0-1020 KB: Hex) | |

| |
|---|
| **System Switch 1B - Not used** (do not change these settings) |
| **System Switch 1C - Not used** (do not change these settings) |

| **System Switch 1D [SP No. 1-101-030]** | | |
|---|---|---|
| **No** | **FUNCTION** | **COMMENTS** |
| 0 | RTI/CSI/CPS code display<br>0: ON<br>1: OFF | 0: RTI, CSI, CPS codes are displayed on the top line of the LCD panel during communication.<br>1: Codes are switched off (no display) |
| 1-7 | **Not used** | Do not change these settings. |

| |
|---|
| **System Switch 1E [SP No. 1-101-031]** |

| No | FUNCTION | COMMENTS |
|---|---|---|
| 0 | Communication after the Journal data storage area has become full<br>0: Impossible<br>1: Possible | 0: When this switch is on and the journal history becomes full, the next report prints. If the journal history is not deleted, the next transmission cannot be received. This prevents overwriting communication records before the machine can print them.<br>1: If the buffer memory of the communication records for the Journal is full, fax communications are still possible. But the machine will overwrite the oldest communication records.<br>Note: This setting is effective only when Automatic Journal printout is enabled but the machine cannot print the report (e.g., no paper). |
| 1 | Action when the SAF memory has become full during scanning<br>0: The current page is erased.<br>1: The entire file is erased. | 0: If the SAF memory becomes full during scanning, the successfully scanned pages are transmitted.<br>1: If the SAF memory becomes full during scanning, the file is erased and no pages are transmitted.<br>This bit switch is ignored for parallel memory transmission. |
| 2 | RTI/CSI display priority<br>0: RTI 1: CSI | This bit determines which identifier, RTI or CSI, is displayed on the LCD while the machine is communicating in G3 non-standard mode. |
| 3 | File No. printing<br>0: Enabled<br>1: Disabled | 1: File numbers are not printed on any reports. |
| 4 | Action when authorized reception is enabled but authorized RTIs/CSIs are not yet programmed<br>0: All fax reception is disabled | If authorized reception is enabled but the user has stored no acceptable sender RTIs or CSIs, the machine will not be able to receive any fax messages.<br>If the customer wishes to receive messages from |

Bit Switches

| | | |
|---|---|---|
| | 1: Faxes can be received if the sender has an RTI or CSI | any sender that includes an RTI or CSI, and to block messages from senders that do not include an RTI or CSI, change this bit to “1”, then enable Authorized Reception.<br>Otherwise, keep this bit at “0 (default setting)”. |
| 5-7 | **Not used** | Do not change the settings |

| **System Switch 1F [SP No. 1-101-032]** | | |
|---|---|---|
| **No** | **FUNCTION** | **COMMENTS** |
| 0 | **Not used** | Do not change the settings. |
| 1 | Report printout after an original jam during SAF storage or if the SAF memory fills up<br>0: Enabled<br>1: Disabled | 0: When an original jams, or the SAF memory overflows during scanning, a report will be printed. Change this bit to “1” if the customer does not want to have a report in these cases.<br>Memory tx – Memory storage report<br>Parallel memory tx – Transmission result report |
| 2 | **Not used** | Do not change the settings. |
| 3 | Received fax print start timing (G3 reception)<br>0: After receiving each page<br>1: After receiving all pages | 0: The machine prints each page immediately after the machine receives it.<br>1: The machine prints the complete message after the machine receives all the pages in the memory. |
| 4-6 | **Not used** | Do not change the factory settings. |
| 7 | Action when a fax SC has occurred<br>0: Automatic reset<br>1: Fax unit stops | 0: When the fax unit detects a fax SC code other than SC1201 and SC1207, the fax unit automatically resets itself.<br>1: When the fax unit detects any fax SC code, the fax unit stops.<br>Cross Reference<br>Fax SC codes - See “Troubleshooting” |

## 4.3.2 I-FAX SWITCHES

| I-fax Switch 00 [SP No. 1-102-001] | | |
|---|---|---|
| **No** | **FUNCTION** | **COMMENTS** |
| | Original Width of TX Attachment File | This setting sets the maximum size of the original that the destination can receive. (Bits 3~7 are reserved for future use or not used.) |
| 0 | A4 | 0: Off (not selected), 1: On (selected)<br>If more than one of these three bits is set to “1”, the larger size has priority. For example, if both Bit 2 and Bit 1 are set to “1” then the maximum size is “A3” (Bit 2).<br>When mail is sent, there is no negotiation with the receiving machine at the destination, so the sending machine cannot make a selection for the receiving capabilities (original width setting) of the receiving machine. The original width selected with this switch is used as the RX machine’s original width setting, and the original is reduced to this size before sending. The default is A4.<br>If the width selected with this switch is higher than the receiving machine can accept, the machine detects this and this causes an error. |
| 1 | B4 | |
| 2 | A3 | |
| 3-6 | Reserved | |
| 7 | **Not used** | |

| I-fax Switch 01 [SP No. 1-102-002] | | |
|---|---|---|
| **No** | **FUNCTION** | **COMMENTS** |
| | Original Line Resolution of TX Attachment File | These settings set the maximum resolution of the original that the destination can receive. |
| 0 | 200x100 Standard | 0: Not selected<br>1: Selected |
| 1 | 200x200 Detail | |

Bit Switches

| | | |
|---|---|---|
| 2 | 200x400 Fine | If more than one of these three bits is set to “1”, the higher resolution has priority. For example, if both Bit 0 and Bit 2 are set to “1” then the resolution is set for "Bit 2 200 x 400. |
| 3 | 300 x 300 Reserve | |
| 4 | 400 x 400 Super Fine | |
| 5 | 600 x 600 Reserve | |
| 6 | Reserve | |
| 7 | mm/inch | |
| | This setting selects mm/inch conversion for mail transmission.<br>0: Off (No conversion), 1: On (Conversion)<br>When on (set to “1”), the machine converts millimeters to inches for sending mail.<br>There is no switch for converting inches to millimeters.<br>Unlike G3 fax transmissions which can negotiate between sender and receiver to determine the setting, mail cannot negotiate between terminals; the mm/inch selection is determined by the sender fax.<br>When this switch is Off (0):<br>Images scanned in inches are sent in inches.<br>Images scanned in mm are sent in mm.<br>Images received in inches are transmitted in inches.<br>Images received in mm are transmitted in mm.<br>When this switch is On (1):<br>Images scanned in inches are sent in inches.<br>Images scanned in mm are converted to inches.<br>Images received in inches are transmitted in inches.<br>Images received in mm are converted to inches. | |

| **I-fax Switch 02 [SP No. 1-102-003]** | | |
|---|---|---|
| **No** | **FUNCTION** | **COMMENTS** |
| 0 | RX Text Mail Header Processing | |
| | This setting determines whether the header information is printed with text e-mails when they are received.<br>0: Prints only text mail. | |

| | |
|---|---|
| | 1: Prints mail header information attached to text mail.<br>When a text mail is received with this switch On (1), the “From” address and “Subject” address are printed as header information.<br>When a mail with only binary data is received (a TIFF-F file, for example), this setting is ignored and no header is printed. |
| 1 | Output from Attached Document at E-mail TX Error |
| | This setting determines whether only the first page or all pages of an e-mail attachment are printed at the sending station when a transmission error occurs. This allows the customer to see which documents have not reached their intended destinations if sent to the wrong e-mail addresses, for example.<br>0: Prints 1st page only.<br>1: Prints all pages. |
| 2-3 | Text String for Return Receipt |
| | This setting determines the text string output for the Return Receipt that confirms the transmission was received normally at the destination. |
| | 00: “Dispatched”<br>Sends from PC mail a request for a Return Receipt. Receives the Return Receipt with “dispatched” in the 2nd part:<br>Disposition: Automatic-action/MDN-send automatically; dispatched<br>The “dispatched” string is included in the Subject string.<br>01: “Displayed”<br>Sends from PC mail a request for a Return Receipt. Receives the Return Receipt with “displayed” in the 2nd part:<br>Disposition: Automatic-action/MDN-send automatically; displayed<br>The “displayed” string is included in the Subject string.<br>10: Reserved<br>11: Reserved<br>A mail requesting a Return Receipt sent from an IFAX with this switch set to “00” (for “dispatched”) received by Microsoft Outlook 2000 may cause an error. If any setting other than “displayed” (01) causes a problem, change the setting to “01” to enable normal sending of the Return Receipt. |
| 4 | Media accept feature |

Bit Switches

| | |
|---|---|
| | This setting adds or does not add the media accept feature to the answer mail to confirm a reception.<br>0: Does not add the media accept feature to the answer mail<br>1: Adds the media accept feature to the answer mail.<br>Use this bit switch if a problem occurs when the machine receives an answer mail, which contains the media accept feature field. |
| 5-6 | **Not Used** |
| 7 | Image Resolution of RX Text Mail |
| | This setting determines the image resolution of the received mail.<br>0: 200 x 200<br>1: 400 x 400<br>The “1” setting requires installation of the Function Upgrade Card in order to have enough SAF (Store and Forward) memory to receive images at 400 x 400 resolution. |

**I-fax Switch 03 - Not used** (do not change the settings) [ SP No. 1-102-004]

**I-fax Switch 04 [SP No. 1-102-005]**

| No | FUNCTION | COMMENTS |
|---|---|---|
| 0 | Subject for Delivery TX/Memory Transfer | |
| | This setting determines whether the RTI/CSI registered on this machine or the RTI/CSI of the originator is used in the subject lines of transferred documents.<br>0: Puts the RTI/CSI of the originator in the Subject line. If this is used, either the RTI or CSI is used. Only one of these can be received for use in the subject line.<br>1: Puts the RTI/CSI registered on this machine in the Subject line.<br>When this switch is used to transfer and deliver mail to a PC, the information in the Subject line that indicates where the transmission originated can be used to determine automatically the destination folder for each e-mail. | |
| 1 | Subject corresponding to mail post database<br>0: Standard subject<br>1: Mail post database subject | |

| | |
|---|---|
| | The standard subject is replaced by the mail post database subject in the following three cases:<br>1) When the service technician sets the service (software) switch.<br>2) When memory sending, delivery specified by F code or SMTP reception is done.<br>3) With relay broadcasting (1st stage without the Schmidt 4 function).<br>Note<br>▪ This switch does not apply for condition 3) when the RX system is set up for memory sending, delivery by F-code, sending with SMTP RX and when operators are using FOL (to prevent problems when receiving transmissions). |
| 2-7 | **Not Used** |

**I-fax Switch 05 [SP No. 1-102-006]**

| No | FUNCTION | COMMENTS |
|---|---|---|
| 0 | Mail Addresses of SMTP Broadcast Recipients | |
| | Determines whether the e-mail addresses of the destinations that receive transmissions broadcasted using SMTP protocol are recorded in the Journal.<br>For example:<br>"1st destination + Total number of destinations: 9" in the Journal indicates a broadcast to 9 destinations.<br>0: Not recorded<br>1: Recorded | |
| 1 | I-Fax Automatic Re-dial Setting<br>0: OFF<br>1: ON | Determines whether the I-fax automatically redials when an error occurs. |
| 2-7 | **Not Used** | |

| |
|---|
| **I-fax Switch 06 - Not used** (do not change the settings) [SP No. 1-102-007] |
| **I-fax Switch 07 - Not used** (do not change the settings) [SP No. 1-102-008] |

Bit Switches

| I-fax Switch 08 [SP No. 1-102-009] | | |
|---|---|---|
| **No** | **FUNCTION** | **COMMENTS** |
| **0-7** | Memory Threshold for POP Mail Reception | |
| | This setting determines the amount of SAF (Store and Forward) memory. (SAF stores fax messages to send later for transmission to more than one location, and also holds incoming messages if they cannot be printed.) When the amount of SAF memory available falls below this setting, mail can no longer be received; received mail is then stored on the mail server.<br>00-FF (0 to 1024 KB: HEX)<br>Note<br>▪ The hexadecimal number you enter is multiplied by 4 KB to determine the amount of memory. | |

| I-fax Switch 09 [SP No. 1-102-010] | | |
|---|---|---|
| **No** | **FUNCTION** | **COMMENTS** |
| 0-3 | **Not used** | Do not change the settings |
| 4-7 | Restrict TX Retries | This setting determines the number of retries when connection and transmission fails due to errors.<br>01-F (1-15 Hex) |

| |
|---|
| **I-fax Switch 0A - Not used** (do not change the settings) **[SP No. 1-102-011]** |
| **I-fax Switch 0B - Not used** (do not change the settings) **[SP No. 1-102-012]** |
| **I-fax Switch 0C - Not used** (do not change the settings) **[SP No. 1-102-013]** |
| **I-fax Switch 0D - Not used** (do not change the settings) **[SP No. 1-102-014]** |
| **I-fax Switch 0E - Not used** (do not change the settings) **[SP No. 1-102-015]** |

| I-fax Switch 0F [SP No. 1-102-016] | | |
|---|---|---|
| **No** | **FUNCTION** | **COMMENTS** |
| 0 | Delivery Method for SMTP RX Files | |
| | This setting determines whether files received with SMTP protocol are delivered or output immediately.<br>0: Off. Files received via SMTP are output immediately without delivery.<br>1: On. Files received via SMTP are delivered immediately to their destinations. | |
| 1 | Signature for the SMTP | |
| | This setting determines whether a signature is put on an e-mail via SMTP.<br>0: No signature<br>1: Signature | |
| 2 | This setting determines whether an e-mail via SMTP is encrypted.<br>0: Not encrypted<br>1: Encrypted | |
| 3-7 | **Not used** | |

## 4.3.3 PRINTER SWITCHES

| Printer Switch 00 [SP No. 1-103-001] | | |
|---|---|---|
| **No** | **FUNCTION** | **COMMENTS** |
| 0 | Select page separation marks<br>0: Off<br>1: On | 0: If a 2 page RX transmission is split, [*] is printed in the bottom right corner of the 1st page and only a [2] is printed in the upper right corner of the 2nd page.<br>1: If a 2 page RX transmission is split into two pages, for example, [*] [2] is printed in the bottom right corner of the 1st page and only a [2] is printed in the upper right corner of the 2nd page.<br>Note<br>▪ This helps the user to identify pages that have been split because the size of the paper is smaller than the size of the document received. (When A5 is used to print an A4 size document, for example.) |
| 1 | Repetition of data when the received page is longer than the printer paper<br>0: Off<br>1: On | 1: Default. 10 mm of the trailing edge of the previous page are repeated at the top of the next page.<br>0: The next page continues from where the previous page stopped without any repeated text. |
| 2 | Prints the date and time on received fax messages<br>0: Disabled<br>1: Enabled | This switch is only effective when user parameter 02 - bit 2 (printing the received date and time on received fax messages) is enabled.<br>1: The machine prints the received and printed date and time at the bottom of each received page. |
| 3-7 | **Not used** | Do not change the settings. |

| Printer Switch 01 [SP No. 1-103-002] | | |
|---|---|---|
| **No** | **FUNCTION** | **COMMENTS** |
| 0-2 | **Not used** | Do not change the settings. |
| 3-4 | Maximum print width used in the setup protocol<br>Bit 4: 0, Bit 3: 0 = Not used<br>Bit 4: 0, Bit 3: 1 = A3<br>Bit 4: 1, Bit 3: 0 = B4<br>Bit 4: 1, Bit 3: 1 = A4 | These bits are only effective when bit 7 of printer switch 01 is “1”. |
| 5-6 | **Not used** | Do not change the settings. |
| 7 | Received message width restriction in the protocol signal to the sender<br>0: Disabled<br>1: Enabled | 0: The machine informs the transmitting machine of the print width depending on the paper size available from the paper feed stations.<br>Refer to the table on the next page for how the machine chooses the paper width used in the setup protocol (NSF/DIS).<br>1: The machine informs the transmitting machine of the fixed paper width which is specified by bits 3 and 4 above. |

| Printer Switch 02 [SP No. 1-103-003] | | |
|---|---|---|
| **No** | **FUNCTION** | **COMMENTS** |
| 0 | 1st paper feed station usage for fax printing<br>0: Enabled<br>1: Disabled | 0: The paper feed station can be used to print fax messages and reports.<br>1: The specified paper feed station will not be used for printing fax messages and reports.<br>Note<br>▪ Do not disable usage for a paper feed station which has been specified by User Parameter Switch 0F (15), or which is |
| 1 | 2nd paper feed station usage for fax printing<br>0: Enabled<br>1: Disabled | |

Bit Switches

| | | |
|---|---|---|
| 2 | 3rd paper feed station usage for fax printing<br>0: Enabled<br>1: Disabled | used for the Specified Cassette Selection feature. |
| 3 | 4th paper feed station usage for fax printing<br>0: Enabled<br>1: Disabled | |
| 4 | LCT usage for fax printing<br>0: Enabled<br>1: Disabled | |
| 5-7 | **Not used** | Do not change the settings. |

| **Printer Switch 03 [SP No. 1-103-004]** | | |
|---|---|---|
| **No** | **FUNCTION** | **COMMENTS** |
| 0 | Length reduction of received data<br>0: Disabled<br>1: Enabled | 0: Incoming pages are printed without length reduction.<br>(Page separation threshold: Printer Switch 03, bits 4 to 7)<br>1: Incoming page length is reduced when printing.<br>(Maximum reducible length: Printer Switches 04, bits 0 to 4) |
| 1-3 | Not used | Do not change the settings |
| 4-7 | Page separation setting when sub scan compression is forbidden<br>00-0F (0-15 mm: Hex)<br>Default: 6 mm | Page separation threshold (with reduction disabled with switch 03-0 above).<br>For example, if this setting is set to "10", and A4 is the selected paper size:<br>If the received document is 10 mm or less longer than A4, then the 10 mm are cut and only 1 page prints.<br>If the received document is 10 mm longer than A4, |

| | | |
|---|---|---|
| | | then the document is split into 2 pages. |

**Printer Switch 04**
**SP No. 1-103-005**

| No | FUNCTION | COMMENTS |
|---|---|---|
| 0-4 | Maximum reducible length when length reduction is enabled with switch 03-0 above.<br><Maximum reducible length> = <Paper length> + (N x 5mm)<br>“N” is the decimal value of the binary setting of bits 0 to 4. | |

| Bit 4 | Bit 3 | Bit 2 | Bit 1 | Bit 0 | Setting |
|---|---|---|---|---|---|
| 0 | 0 | 0 | 0 | 0 | 0 mm |
| 0 | 0 | 0 | 0 | 1 | 5 mm |
| 0 | 0 | 1 | 0 | 0 | 20 mm |
| 1 | 1 | 1 | 1 | 1 | 155 mm |

For A5 sideways and B5 sideways paper
<Maximum reducible length> = <Paper length> + 0.75 x (N x 5mm)

| | | |
|---|---|---|
| 5-6 | Length of the duplicated image on the next page, when page separation has taken place.<br>Bit 6: 0, Bit 5: 0 = 4 mm<br>Bit 6: 1, Bit 5: 0 = 10 mm<br>Bit 6: 0, Bit 5: 1 = 15 mm<br>Bit 6: 1, Bit 5: 1 = **Not used** | |
| 7 | **Not used.** | Do not change the setting. |

**Printer Switch 05 - Not used** (do not change the settings)

**Printer Switch 06 [SP No. 1-103-007]**

| No | FUNCTION | COMMENTS |
|---|---|---|

Bit Switches

| | | |
|---|---|---|
| 0 | Printing while a paper cassette is pulled out, when the Just Size Printing feature is enabled.<br>0: Printing will not start<br>1: Printing will start if another cassette has a suitable size of paper, based on the paper size selection priority tables. | Cross reference<br>Just size printing on/off – User switch 05, bit 5 |
| 1-7 | **Not used.** | Do not change the settings. |

| **Printer Switch 07 [SP No. 1-103-008]** | | |
|---|---|---|
| **No** | **FUNCTION** | **COMMENTS** |
| 0-3 | **Not used.** | Do not change the settings. |
| 4 | List of destinations in the Communication Failure Report for broadcasting<br>0: All destinations<br>1: Only destinations where communication failure occurred | 1: Only destinations where communication failure occurred are printed on the Communication Failure Report. |
| 5-7 | **Not used.** | Do not change the settings. |

| |
|---|
| **Printer Switch 08 - Not used** (do not change the settings) |
| **Printer Switch 09 - Not used** (do not change the settings) |
| **Printer Switch 0A - Not used** (do not change the settings) |

| |
|---|
| **Printer Switch 0B - Not used** (do not change the settings) |
| **Printer Switch 0C - Not used** (do not change the settings) |

| **Printer Switch 0D - Not used** (do not change the settings) |
|---|

| **Printer Switch 0E [SP No. 1-103-015]** | | |
|---|---|---|
| **No** | **FUNCTION** | **COMMENTS** |
| 0 | Paper size selection priority<br>0: Width<br>1: Length | 0: A paper size that has the same width as the received data is selected first.<br>1: A paper size which has enough length to print all the received lines without reduction is selected first. |
| 1 | Paper size selected for printing A4 width fax data<br>0: 8.5" x 11" size<br>1: A4 size | This switch determines which paper size is selected for printing A4 width fax data, when the machine has both A4 and 8.5" x 11" size paper. |
| 2 | Page separation<br>0: Enabled<br>1: Disabled | 1: If all paper sizes in the machine require page separation to print a received fax message, the machine does not print the message (Substitute Reception is used).<br>After a larger size of paper is set in a cassette, the machine automatically prints the fax message. |
| 3-4 | Printing the sample image on reports<br>Bit 4: 0, Bit 3: 0<br>= The upper half only<br>Bit 4: 0, Bit 3: 1<br>= 50% reduction in sub-scan only<br>Bit 4: 1, Bit 3: 0<br>= Same size<br>Bit 4: 1, Bit 3: 1<br>= **Not used** | “Same size” means the sample image is printed at 100%, even if page separation occurs.<br>User Parameter Switch 19 (13H) bit 4 must be set to “0” to enable this switch.<br>Refer to Detailed Section Descriptions for more on this feature. |
| 5-6 | **Not used** | Do not change the settings. |
| 7 | Equalizing the reduction ratio | 0: When page separation has taken place, all the |

Bit Switches

| | | |
|---|---|---|
| | among separated pages<br>(Page Separation)<br>0: Enabled<br>1: Disabled | pages are reduced with the same reduction ratio.<br>1: Only the last page is reduced to fit the selected paper size when page separation has taken place. Other pages are printed without reduction. |

| **Printer Switch 0F [SP No. 1-103-016]** | | |
|---|---|---|
| **No** | **FUNCTION** | **COMMENTS** |
| 0-1 | Smoothing feature<br>Bit 1: 0 Bit 0: 0 = Disabled<br>Bit 1: 0 Bit 0: 1 = Disabled<br>Bit 1: 1 Bit 0: 0 = Enabled<br>Bit 1: 1 Bit 0: 1 = **Not used** | (0, 0) (0, 1): Disable smoothing if the machine receives halftone images from other manufacturers fax machines frequently. |
| 2 | Duplex printing<br>0: Disabled<br>1: Enabled | 1: The machine always prints received fax messages in duplex printing mode: |
| 3 | Binding direction for Duplex printing<br>0: Left binding<br>1: Top binding | 0: Sets the binding for the left edge of the stack.<br>1: Sets the binding for the top of the stack. |
| 4-7 | **Not used** | Do not change the settings. |

## 4.3.4 COMMUNICATION SWITCHES

| Communication Switch 00 [SP No. 1-104-001] | | |
|---|---|---|
| **No** | **FUNCTION** | **COMMENTS** |
| 0-1 | Compression modes available in receive mode<br>Bit 1: 0 Bit 0: 0 = MH only<br>Bit 1: 0 Bit 0: 1 = MH/MR<br>Bit 1: 1 Bit 0: 0 = MH/MR/MMR<br>Bit 1: 1 Bit 0: 1<br>= MH/MR/MMR/JBIG | These bits determine the compression capabilities to be declared in phase B (handshaking) of the T.30 protocol. |
| 2-3 | Compression modes available in transmit mode<br>Bit 3: 0 Bit 2: 0 = MH only<br>Bit 3: 0 Bit 2: 1 = MH/MR<br>Bit 3: 1 Bit 2: 0 = MH/MR/MMR<br>Bit 3: 1 Bit 2: 1<br>= MH/MR/MMR/JBIG | These bits determine the compression capabilities to be used in the transmission and to be declared in phase B (handshaking) of the T.30 protocol. |
| 4 | **Not used** | Do not change the settings. |
| 5 | JBIG compression method: Reception<br>0: Only basic supported<br>1: Basic and optional both supported | Change the setting when communication problems occur using JBIG compression. |
| 6 | JBIG compression method: Transmission<br>0: Basic mode priority<br>1: Optional mode priority | Change the setting when communication problems occur using JBIG compression. |
| 7 | **Not used** | Do not change the settings. |

Bit Switches

| Communication Switch 01 [SP No. 1-104-002] | | |
|---|---|---|
| **No** | **FUNCTION** | **COMMENTS** |
| 0 | ECM<br>0: Off 1: On | If this bit is set to 0, ECM is switched off for all communications.<br>In addition, V.8 protocol and JBIG compression are switched off automatically. |
| 1 | **Not used** | Do not change the settings. |
| 2-3 | Wrong connection prevention method<br>Bit 3: 0, Bit 2: 0 = None<br>Bit 3: 0, Bit 2: 1 = 8 digit CSI<br>Bit 3: 1, Bit 2: 0 = 4 digit CSI<br>Bit 3: 1, Bit 2: 1 = CSI/RTI | (0,1) - The machine will disconnect the line without sending a fax message, if the last 8 digits of the received CSI do not match the last 8 digits of the dialed telephone number. This does not work when manually dialed.<br>(1,0) - The same as above, except that only the last 4 digits are compared.<br>(1,1) - The machine will disconnect the line without sending a fax message, if the other end does not identify itself with an RTI or CSI.<br>(0,0) - Nothing is checked; transmission will always go ahead.<br>Note<br>▪ This function does not work when dialing is done from the external telephone. |
| 4-5 | **Not used** | Do not change the setting. |
| 6-7 | Maximum printable page length available<br>Bit 7: 0 Bit 6: 0 = No limit<br>Bit 7: 0 Bit 6: 1 = B4 (364 mm)<br>Bit 7: 1 Bit 6: 0 = A4 (297 mm)<br>Bit 7: 1 Bit 6: 1 = **Not used** | The setting determined by these bits is informed to the transmitting terminal in the pre-message protocol exchange (in the DIS/NSF frames). |

| Communication Switch 02 [SP No. 1-104-003] |
|---|

| No | FUNCTION | COMMENTS | |
|---|---|---|---|
| 0 | G3 Burst error threshold<br>0: Low 1: High | If there are more consecutive error lines in the received page than the threshold, the machine will send a negative response. The Low and High threshold values depend on the sub-scan resolution, and are as follows. | |
| | | 100 dpi | 6(L) ➜ 12(H) |
| | | 200 dpi | 12(L) ➜ 24(H) |
| | | 300 dpi | 18(L) ➜ 36(H) |
| | | 400 dpi | 24(L) ➜ 48(H) |
| 1 | Acceptable total error line ratio<br>0: 5% 1: 10% | If the error line ratio for a page exceeds the acceptable ratio, RTN will be sent to the other end. | |
| 2 | Treatment of pages received with errors during G3 reception<br>0: Deleted from memory without printing<br>1: Printed | 0: Pages received with errors are not printed. | |
| 3 | Hang-up decision when a negative code (RTN or PIN) is received during G3 immediate transmission<br>0: No hang-up, 1: Hang-up | 0: The next page will be sent even if RTN or PIN is received.<br>1: The machine will send DCN and hang up if it receives RTN or PIN.<br>This bit is ignored for memory transmissions or if ECM is being used. | |
| 4-7 | **Not used** | Do not change the settings. | |

| **Communication Switch 03 [SP No. 1-104-004]** | | |
|---|---|---|
| **No** | **FUNCTION** | **COMMENTS** |
| 0-7 | Maximum number of page | 00 - FF (Hex) times. |

| | | |
|---|---|---|
| | retransmissions in a G3 memory transmission | This setting is not used if ECM is switched on.<br>Default setting - 03(H) |

| |
|---|
| **Communication Switch 04 - Not used** (do not change the settings) |
| **Communication Switch 05 - Not used** (do not change the settings) |
| **Communication Switch 06 - Not used** (do not change the settings) |
| **Communication Switch 07 - Not used** (do not change the settings) |
| **Communication Switch 08 - Not used** (do not change the settings) |

| **Communication Switch 09 [SP No. 1-104-010]** | | |
|---|---|---|
| **No** | **FUNCTION** | **COMMENTS** |
| 0-7 | IP-Fax dial interval setting | Adjusts the interval of the I-fax dialing.<br>The interval of I-fax dialing is calculated by following formula.<br>[Interval time = specified value with this switch x 0.2 msec] |

| **Communication Switch 0A [SP No. 1-104-011]** | | |
|---|---|---|
| **No** | **FUNCTION** | **COMMENTS** |
| 0 | Point of resumption of memory transmission upon redialing<br>0: From the error page<br>1: From page 1 | 0: The transmission begins from the page where transmission failed the previous time.<br>1: Transmission begins from the first page, using normal memory transmission. |
| 1-7 | **Not used** | Do not change the settings. |

| **Communication Switch 0B [SP No. 1-104-012]** | | |
|---|---|---|
| **No** | **FUNCTION** | **COMMENTS** |

| | | |
|---|---|---|
| 0-3 | **Not used** | Do not change the settings. |
| 4 | Print setting when receiving a request to forward a fax | 0: The machine does not print fax data.<br>1: The machine prints fax data. |
| 5-7 | **Not used** | Do not change the settings. |

**Communication Switch 0C - Not used** (do not change the settings)

| **Communication Switch 0D [SP No. 1-104-014]** | | |
|---|---|---|
| **No** | **FUNCTION** | **COMMENTS** |
| 0-7 | The available memory threshold, below which ringing detection (and therefore reception into memory) is disabled | 00 to FF (Hex), unit = 4 kbytes<br>(e.g., 06(H) = 24 kbytes)<br>One page is about 24 kbytes.<br>The machine refers to this setting before each fax reception. If the amount of remaining memory is below this threshold, the machine cannot receive any fax messages.<br>If this setting is kept at 0, the machine will detect ringing signals and go into receive mode even if there is no memory available. This will result in communication failure. |

| **Communication Switch 0E [SP No. 1-104-015]** | | |
|---|---|---|
| **No** | **FUNCTION** | **COMMENTS** |
| 0-7 | Minimum interval between automatic dialing attempts | 06 to FF (Hex), unit = 2 s<br>(e.g., 06(H) = 12 s)<br>This value is the minimum time that the machine waits before it dials the next destination. |

**Communication Switch 0F – Not used** (do not change the settings.)

Bit Switches

| Communication Switch 10 [SP No. 1-104-017] | | |
|---|---|---|
| **No** | **FUNCTION** | **COMMENTS** |
| 0-7 | Memory transmission: Maximum number of dialing attempts to the same destination | 01 – FE (Hex) times |

**Communication Switch 11 – Not used** (do not change the settings.)

| Communication Switch 12 [SP No. 1-104-019] | | |
|---|---|---|
| **No** | **FUNCTION** | **COMMENTS** |
| 0-7 | Memory transmission: Interval between dialing attempts to the same destination | 01 – FF (Hex) minutes |

**Communication Switch 13 – Not used** (do not change the settings.)

| Communication Switch 14 [SP No. 1-104-021] | | |
|---|---|---|
| **No** | **FUNCTION** | **COMMENTS** |
| 0 | Inch-to-mm conversion during transmission<br>0: Disabled 1: Enabled | 0: In immediate transmission, data scanned in inch format are transmitted without conversion.<br>In memory transmission, data stored in the SAF memory in mm format are transmitted without conversion.<br>Note: When storing the scanned data into SAF memory, the fax unit always converts the data into mm format.<br>1: The machine converts the scanned data or stored data in the SAF memory to the format which was specified in the set-up protocol |

| | | |
|---|---|---|
| | | (DIS/NSF) before transmission. |
| 1-5 | **Not used** | Do not change the factory settings. |
| 6-7 | Available unit of resolution in which fax messages are received<br>Bit 7: 0, Bit 6: 0 = mm<br>Bit 7: 0, Bit 6: 1 = inch<br>Bit 7: 1, Bit 6: 0 = mm and inch (default)<br>Bit 7: 1, Bit 6: 1 = **Not used** | For the best performance, do not change the factory settings.<br>The setting determined by these bits is informed to the transmitting terminal in the pre-message protocol exchange (in the DIS/NSF frames). |

| |
|---|
| **Communication Switch 15 – Not used** (do not change the settings) |

| **Communication Switch 16 [SP No. 1-104-023]** | | |
|---|---|---|
| **No** | **FUNCTION** | **COMMENTS** |
| 0 | **Not used** | Do not change the factory settings. |
| 1 | Optional G3 unit (G3-2)<br>0: Off<br>1: On | Change this bit to "1" when installing the first optional G3 unit (G3-2). |
| 2 | **Not used** | Do not change the factory settings. |
| 3 | Optional G3 unit (G3-3)<br>0: Off<br>1: On | Change this bit to "1" when installing the second optional G3 unit (G3-3). |
| 4-7 | **Not used** | Do not change the factory settings. |

| **Communication Switch 17 [SP No. 1-104-024]** | | |
|---|---|---|
| **No** | **FUNCTION** | **COMMENTS** |
| 0 | SEP reception | 0: Polling transmission to another maker’s |

Bit Switches

| | | |
|---|---|---|
| | 0: Disabled<br>1: Enabled | machine using the SEP (Selective Polling) signal is disabled. |
| 1 | SUB reception<br>0: Disabled<br>1: Enabled | 0: Confidential reception to another maker's machine using the SUB (Sub-address) signal is disabled. |
| 2 | PWD reception<br>0: Disabled<br>1: Enabled | 0: Disables features that require PWD (Password) signal reception. |
| 3-6 | **Not used** | Do not change the factory settings. |
| 7 | Action when there is no box with an F-code that matches the received SUB code<br>0: Disconnect the line<br>1: Receive the message (using normal reception mode) | Change this setting when the customer requires. |

| **Communication Switch 18 [SP No. 1-104-025]** | | |
|---|---|---|
| **No** | **FUNCTION** | **COMMENTS** |
| 0-4 | **Not used** | Do not change the factory settings. |
| 5 | IP-Fax dial-in routing selection<br>0: Off<br>1: On | 1: Transfers receiving data to each IP-Fax dial-in number.<br>IP-Fax dial-in number is 4 digit-number. |
| 6-7 | **Not used** | Do not change the factory settings. |

| |
|---|
| **Communication Switch 19 - Not used** (do not change the settings) |
| **Communication Switch 1A - Not used** (do not change the settings) |

| |
|---|
| **Communication Switch 1B [SP No. 1-104-028]** |

| No | FUNCTION | COMMENTS |
|---|---|---|
| 0-7 | Extension access code (0 to 7) to turn V.8 protocol On/Off<br>0: On<br>1: Off | If the PABX does not support V.8/V.34 protocol procedure, set this bit to “1” to disable V.8.<br>Example: If “0” is the PSTN access code, set bit 0 to 1. When the machine detects “0” as the first dialed number, it automatically disables V.8 protocol. (Alternatively, if “3” is the PSTN access code, set bit 3 to 1.) |

| **Communication Switch 1C [SP No. 1-104-029]** | | |
|---|---|---|
| **No** | **FUNCTION** | **COMMENTS** |
| 0-1 | Extension access code (8 and 9) to turn V.8 protocol On/Off<br>0: On<br>1: Off | Refer to communication switch 1B.<br>Example: If “8” is the PSTN access code, set bit 0 to 1. When the machine detects “8” as the first dialed number, it automatically disables V.8 protocol. (If “9” is the PSTN access code, use bit 1.) |
| 2-7 | **Not used** | Do not change the settings. |

| |
|---|
| **Communication Switch 1D - Not used** (do not change the settings) |
| **Communication Switch 1E - Not used** (do not change the settings) |
| **Communication Switch 1F - Not used** (do not change the settings) |

## 4.3.5 G3 SWITCHES

| G3 Switch 00 [SP No. 1-105-001] | | |
|---|---|---|
| **No** | **FUNCTION** | **COMMENTS** |
| 0<br>1 | Monitor speaker during communication (tx and rx)<br>Bit 1: 0, Bit 0: 0 = Disabled<br>Bit 1: 0, Bit 0: 1 = Up to Phase B<br>Bit 1: 1, Bit 0: 0 = All the time<br>Bit 1: 1, Bit 0: 1 = **Not used** | (0, 0): The monitor speaker is disabled all through the communication.<br>(0, 1): The monitor speaker is on up to phase B in the T.30 protocol.<br>(1, 0): Used for testing. The monitor speaker is on all through the communication. Make sure that you reset these bits after testing. |
| 2 | Monitor speaker during memory transmission<br>0: Disabled 1: Enabled | 1: The monitor speaker is enabled during memory transmission. |
| 3-5 | **Not used** | Do not change the settings. |
| 6 | G3 mode selection for direct line<br>0: Off<br>1:On | 1: G3 communication through the direct line is enabled. |
| 7 | **Not used** | Do not change the settings. |

| G3 Switch 01 [SP No. 1-105-002] | | |
|---|---|---|
| **No** | **FUNCTION** | **COMMENTS** |
| 0-1 | **Not used** | Do not change the settings. |
| 2-3 | **Not used** | Do not change the settings. |
| 4 | DIS frame length<br>0: 10 bytes 1: 4 bytes | 1: The bytes in the DIS frame after the 4th byte will not be transmitted (set to 1 if there are communication problems with PC-based faxes |

| | | |
|---|---|---|
| | | which cannot receive the extended DIS frames). |
| 5 | **Not used** | Do not change the setting. |
| 6 | Forbid CED/AMsam output<br>0: Off<br>1: On (Forbid output) | Do not change this setting (Default: 0: Off), unless communication problem is caused by a CED or ANSam transmission. |
| 7 | **Not used** | Do not change the setting. |

| **G3 Switch 02 [SP No. 1-105-003]** | | |
|---|---|---|
| **No** | **FUNCTION** | **COMMENTS** |
| 0 | G3 protocol mode used<br>0: Standard and non-standard<br>1: Standard only | Change this bit to 1 only when the other end can only communicate with machines that send T.30-standard frames only.<br>1: Disables NSF/NSS signals (these are used in non-standard mode communication) |
| 1-6 | **Not used** | Do not change the settings. |
| 7 | Short preamble<br>0: Disabled 1: Enabled | Refer to Appendix B in the Group 3 Facsimile Manual for details about Short Preamble. |

| **G3 Switch 03 [SP No. 1-105-004]** | | |
|---|---|---|
| **No** | **FUNCTION** | **COMMENTS** |
| 0 | DIS detection number<br>(Echo countermeasure)<br>0: 1<br>1: 2 | 0: The machine will hang up if it receives the same DIS frame twice.<br>1: Before sending DCS, the machine will wait for the second DIS which is caused by echo on the line. |
| 1 | **Not Used** | Do not change the settings. |
| 2 | V.8 protocol<br>0: Disabled | 0: V.8/V.34 communications will not be possible.<br>Note: |

Bit Switches

| | | |
|---|---|---|
| | 1: Enabled | Do not set to 0 unless the line condition is always bad enough to slow down the data rate to 14.4 kbps or lower. |
| 3 | ECM frame size<br>0: 256 bytes<br>1: 64 bytes | Keep this bit at “0” in most cases. |
| 4 | CTC transmission conditions<br>0: After one PPR signal received<br>1: After four PPR signals received (ITU-T standard) | 0: When using ECM in non-standard (NSF/NSS) mode, the machine sends a CTC to drop back the modem rate after receiving a PPR, if the following condition is met in communications at 14.4, 12.0, 9.6, and 7.2 kbps.<br>$\sqrt{\text{NTransmit} \leq \text{NResend}}$<br>NTransmit- Number of transmitted frames<br>NResend- Number of frames to be retransmitted<br>1: When using ECM, the machine sends a CTC to drop back the modem rate after receiving four PPRs.<br>PPR, CTC: These are ECM protocol signals.<br>This bit is not effective in V.34 communications. |
| 5 | Modem rate used for the next page after receiving a negative code (RTN or PIN)<br>0: No change 1: Fallback | 1: The machine’s tx modem rate will fall back before sending the next page if a negative code is received. This bit is ignored if ECM is being used. |
| 6 | **Not Used** | Do not change the settings |
| 7 | Select detection of reverse polarity in ringing<br>0: Off<br>1: On | This switch is used to prevent reverse polarity in ringing on the phone line (applied to PSTN-G3 ringing). Do not change this setting<br>0: No detection ⇒ Outside Japan<br>1: Detection ⇒ Inside Japan only |

| G3 Switch 04 [SP No. 1-105-005] | | |
|---|---|---|
| **No** | **FUNCTION** | **COMMENTS** |
| 0-3 | Training error detection threshold | 0 - F (Hex); 0 - 15 bits<br>If the number of error bits in the received TCF is below this threshold, the machine informs the sender that training has succeeded. |
| 4-7 | **Not used** | Do not change the settings. |

| G3 Switch 05 [SP No. 1-105-006] | | | | | | |
|---|---|---|---|---|---|---|
| **No** | **FUNCTION** | | | | | **COMMENTS** |
| 0-3 | Initial Tx modem rate | | | | | These bits set the initial starting modem rate for transmission.<br>Use the dedicated transmission parameters if you need to change this for specific receivers.<br>If a modem rate 14.4 kbps or slower is selected, V.8 protocol should be disabled manually.<br>Cross reference<br>V.8 protocol on/off - G3 switch 03, bit2 |
| | Bit 3 | Bit 2 | Bit 1 | Bit 0 | bps | |
| | 0 | 0 | 0 | 1 | 2.4k | |
| | 0 | 0 | 1 | 0 | 4.8k | |
| | 0 | 0 | 1 | 1 | 7.2k | |
| | 0 | 1 | 0 | 0 | 9.6k | |
| | 0 | 1 | 0 | 1 | 12.0k | |
| | 0 | 1 | 1 | 0 | 14.4k | |
| | 0 | 1 | 1 | 1 | 16.8k | |
| | 1 | 0 | 0 | 0 | 19.2k | |
| | 1 | 0 | 0 | 1 | 21.6k | |
| | 1 | 0 | 1 | 0 | 24.0k | |
| | 1 | 0 | 1 | 1 | 26.4k | |
| | 1 | 1 | 0 | 0 | 28.8k | |
| | 1 | 1 | 0 | 1 | 31.2k | |

Bit Switches

| | | | | | | |
|---|---|---|---|---|---|---|
| | 1 | 1 | 1 | 0 | 33.6k | |
| | Other settings - **Not used** | | | | | |
| 4-5 | Initial modem type for 9.6 k or 7.2 kbps.<br>Bit 5: 0, Bit 4: 0 = V.29<br>Bit 5: 0, Bit 4: 1 = V.17<br>Bit 5: 1, Bit 4: 0 = V.34<br>Bit 5: 1, Bit 4: 1 = **Not used** | | | | | These bits set the initial modem type for 9.6 and 7.2 kbps, if the initial modem rate is set at these speeds. |
| 6-7 | **Not used** | | | | | Do not change the settings. |

| **G3 Switch 06 [SP No. 1-105-007]** | | | | | | |
|---|---|---|---|---|---|---|
| **No** | **FUNCTION** | | | | | **COMMENTS** |
| 0-3 | Initial Rx modem rate | | | | | ▪ These bits set the initial starting modem rate for reception.<br>▪ Use a lower setting if high speeds pose problems during reception.<br>▪ If a modem rate 14.4 kbps or slower is selected, V.8 protocol should be disabled manually.<br>Cross reference:<br>V.8 protocol on/off - G3 switch 03, bit2 |
| | Bit 3 | Bit 2 | Bit 1 | Bit 0 | bps | |
| | 0 | 0 | 0 | 1 | 2.4k | |
| | 0 | 0 | 1 | 0 | 4.8k | |
| | 0 | 0 | 1 | 1 | 7.2k | |
| | 0 | 1 | 0 | 0 | 9.6k | |
| | 0 | 1 | 0 | 1 | 12.0k | |
| | 0 | 1 | 1 | 0 | 14.4k | |
| | 0 | 1 | 1 | 1 | 16.8k | |
| | 1 | 0 | 0 | 0 | 19.2k | |
| | 1 | 0 | 0 | 1 | 21.6k | |
| | 1 | 0 | 1 | 0 | 24.0k | |
| | 1 | 0 | 1 | 1 | 26.4k | |

| | | | | | | |
|---|---|---|---|---|---|---|
| | 1 | 1 | 0 | 0 | 28.8k | |
| | 1 | 1 | 0 | 1 | 31.2k | |
| | 1 | 1 | 1 | 0 | 33.6k | |
| | Other settings - **Not used** | | | | | |
| 4-7 | Modem types available for reception | | | | | ▪ The setting of these bits is used to inform the transmitting terminal of the available modem type for the machine in receive mode.<br>▪ If V.34 is not selected, V.8 protocol must be disabled manually.<br>Cross reference:<br>V.8 protocol on/off - G3 switch 03, bit2 |
| | Bit 7 | Bit 6 | Bit 5 | Bit 4 | Setting | |
| | 0 | 0 | 0 | 1 | V.27ter | |
| | 0 | 0 | 1 | 0 | V.27ter,V.29 | |
| | 0 | 0 | 1 | 1 | V.27ter, V.29, V.33 | |
| | 0 | 1 | 0 | 0 | V.27ter, V.29, V.17/V.33 | |
| | 0 | 1 | 0 | 1 | V.27ter, V.29, V.17/V33, V.34 | |
| | Other settings - **Not used** | | | | | |

| **G3 Switch 07 [SP No. 1-105-008]** | | |
|---|---|---|
| **No** | **FUNCTION** | **COMMENTS** |
| 0-1 | PSTN cable equalizer<br>(tx mode: Internal)<br>Bit 1: 0, Bit 0: 0 = None<br>Bit 1: 0, Bit 0: 1 = Low<br>Bit 1: 1, Bit 0: 0 = Medium<br>Bit 1: 1, Bit 0: 1 = High | Use a higher setting if there is signal loss at higher frequencies because of the length of wire between the modem and the telephone exchange.<br>Use the dedicated transmission parameters for specific receivers.<br>Also, try using the cable equalizer if one or more of the following symptoms occurs. |

Bit Switches

| | | |
|---|---|---|
| | | Communication error<br>Modem rate fallback occurs frequently.<br>Note<br>▪ This setting is not effective in V.34 communications. |
| 2-3 | PSTN cable equalizer<br>(rx mode: Internal)<br>Bit 3: 0, Bit 2: 0 = None<br>Bit 3: 0, Bit 2: 1 = Low<br>Bit 3: 1, Bit 2: 0 = Medium<br>Bit 3: 1, Bit 2: 1 = High | Use a higher setting if there is signal loss at higher frequencies because of the length of wire between the modem and the telephone exchange.<br>Also, try using the cable equalizer if one or more of the following symptoms occurs.<br>Communication error with error codes such as 0-20, 0-23, etc.<br>Modem rate fallback occurs frequently.<br>Note<br>▪ This setting is not effective in V.34 communications. |
| 4 | PSTN cable equalizer<br>(V.8/V.17 rx mode: External)<br>0: Disabled<br>1: Enabled | Keep this bit at “1”. |
| 5 | **Not used** | Do not change the settings. |
| 6 | Parameter selection for dial tone detection<br>0: Normal parameter<br>1: Specific parameter | 0: This uses the fixed table in the ROM for dial tone detection.<br>1: This uses the specific parameter adjusted with SRAM (69ECBEH - 69ECDEH). Select this if the dial tone cannot be detected when the "Normal parameter: 0" is selected. |
| 7 | **Not used** | Do not change the settings. |

| |
|---|
| **G3 Switch 08 - Not used** (do not change the settings) |
| |

| |
|---|
| **G3 Switch 09 - Not used** (do not change the settings) |

| **G3 Switch 0A [SP No. 1-105-011]** | | |
|---|---|---|
| **No** | **FUNCTION** | **COMMENTS** |
| 0-1 | Maximum allowable carrier drop during image data reception<br>Bit 1: 0, Bit 0: 0 = 200 (ms)<br>Bit 1: 0, Bit 0: 1 = 400 (ms)<br>Bit 1: 1, Bit 0: 0 = 800 (ms)<br>Bit 1: 1, Bit 0: 1 = **Not used** | These bits set the acceptable modem carrier drop time.<br>Try using a longer setting if error code 0-22 is frequent. |
| 2 | Select cancellation of high-speed RX if carrier signal lost while receiving<br>0: Off<br>1: On | This switch setting determines if high-speed receiving ends if the carrier signal is lost when receiving during non-ECM mode |
| 3 | **Not used** | Do not change the settings |
| 4 | Maximum allowable frame interval during image data reception.<br>0: 5 s 1: 13 s | This bit set the maximum interval between EOL (end-of-line) signals and the maximum interval between ECM frames from the other end.<br>Try using a longer setting if error code 0-21 is frequent. |
| 5 | **Not used** | Do not change the settings. |
| 6 | Reconstruction time for the first line in receive mode<br>0: 6 s 1: 12 s | When the sending terminal is controlled by a computer, there may be a delay in receiving page data after the local machine accepts set-up data and sends CFR. This is outside the T.30 recommendation. But, if this delay occurs, set this bit to 1 to give the sending machine more time to send data.<br>Refer to error code 0-20. |

Bit Switches

| | | |
|---|---|---|
| | | ITU-T T.30 recommendation: The first line should come within 5 s of CFR. |
| 7 | **Not used** | Do not change the settings. |

| |
|---|
| **G3 Switch 0B - Not used** (do not change the settings). |
| **G3 Switch 0C - Not used** (do not change the settings) |
| **G3 Switch 0D - Not used** (do not change the settings). |

| **G3 Switch 0E [SP No 1-105-015]** | | |
|---|---|---|
| 0-7 | Set CNG send time interval<br>Some machines on the receiving side may not be able to automatically switch the 3-second CNG interval. | |
| | High order bit | 3000-2250ms: 3000-50xNms<br>3000 – 50 x Nms 0F (3000 ms) ≤ N ≤ FF (2250 ms) |
| | Low order bit | 00-0E(3000-3700ms: 3000+50xNms<br>3000 – 50 x Nms 0F (3000 ms) ≤ N ≤ 0F (3700 ms) |

| **G3 Switch 0F [SP No. 1-105-016]** | | |
|---|---|---|
| **No** | **FUNCTION** | **COMMENTS** |
| 0 | Alarm when an error occurred in Phase C or later<br>0: Disabled<br>1: Enabled | If the customer wants to hear an alarm after each error communication, change this bit to “1”. |
| 1 | Alarm when the handset is off-hook at the end of communication<br>0: Disabled<br>1: Enabled | If the customer wants to hear an alarm if the handset is off-hook at the end of fax communication, change this bit to “1”. |

| | | |
|---|---|---|
| 2 | **Not used** | Do not change the settings. |
| 4 | Sidaa manual calibration setting<br>0: Off<br>1: On | 1: manually calibrates for communication with a line, whose current change occurs such as an optical fiber line. |
| 5-7 | **Not used** | Do not change the settings. |

## 4.3.6 G3-2/3 SWITCHES

These switches require an optional G3 interface unit.

G3-3 switches are the same as for G3-2 switches.

| G3-2 Switch 00 [SP No. 1-106-001] | | |
|---|---|---|
| **No** | **FUNCTION** | **COMMENTS** |
| 0-1 | Monitor speaker during communication (tx and rx)<br>Bit 1: 0, Bit 0: 0 = Disabled<br>Bit 1: 0, Bit 0: 1 = Up to Phase B<br>Bit 1: 1, Bit 0: 0 = All the time<br>Bit 1: 1, Bit 0: 1 = Not used | (0, 0): The monitor speaker is disabled all through the communication.<br>(0, 1): The monitor speaker is on up to phase B in the T.30 protocol.<br>(1, 0): Used for testing. The monitor speaker is on all through the communication. Make sure that you reset these bits after testing. |
| 2 | Monitor speaker during memory transmission<br>0: Disabled 1: Enabled | 1: The monitor speaker is enabled during memory transmission. |
| 3-6 | **Not used** | Do not change the settings. |

| G3-2 Switch 01 [SP No. 1-106-002] | | |
|---|---|---|
| **No** | **FUNCTION** | **COMMENTS** |
| 0-3 | **Not used** | Do not change the settings. |
| 4 | DIS frame length<br>0: 10 bytes, 1: 4 bytes | 1: The bytes in the DIS frame after the 4th byte will not be transmitted (set to 1 if there are communication problems with PC-based faxes which cannot receive the extended DIS frames). |
| 5 | **Not used** | Do not change the setting. |
| 6 | CED/ANSam transmission<br>0: Disabled<br>1: Enabled | Do not change this setting, unless the communication problem is caused by the CED/ANSam transmission. |

| | | |
|---|---|---|
| 7 | **Not used** | Do not change the setting. |

| G3-2 Switch 02 [SP No. 1-106-003] | | |
|---|---|---|
| **No** | **FUNCTION** | **COMMENTS** |
| 0 | G3 protocol mode used<br>0: Standard and non-standard<br>1: Standard only | Change this bit to 1 only when the other end can only communicate with machines that send T.30-standard frames only.<br>1: Disables NSF/NSS signals (these are used in non-standard mode communication) |
| 1-4 | **Not used** | Do not change the settings. |
| 5 | Use of modem rate history for transmission using Quick/Speed Dials<br>0: Disabled<br>1: Enabled | 0: Communications using Quick/Speed Dials always start from the highest modem rate.<br>1: The machine refers to the modem rate history for communications with the same machine when determining the most suitable rate for the current communication. |
| 6 | **Not used** | Do not change the settings. |
| 7 | Short preamble<br>0: Disabled, 1: Enabled | Refer to Appendix B in the Group 3 Facsimile Manual for details about Short Preamble. |

| G3-2 Switch 03 [SP No. 1-106-004] | | |
|---|---|---|
| **No** | **FUNCTION** | **COMMENTS** |
| 0 | DIS detection number (Echo countermeasure)<br>0: 1<br>1: 2 | 0: The machine will hang up if it receives the same DIS frame twice.<br>1: Before sending DCS, the machine will wait for the second DIS which is caused by echo on the line. |
| 1 | **Not used** | Do not change the settings. |
| 2 | V.8 protocol | 0: V.8/V.34 communications will not be possible. |

Bit Switches

| | | |
|---|---|---|
| | 0: Disabled<br>1: Enabled | Note<br>▪ Do not set to 0 unless the line condition is always bad enough to slow down the data rate to 14.4 kbps or lower. |
| 3 | ECM frame size<br>0: 256 bytes<br>1: 64 bytes | Keep this bit at “0” in most cases. |
| 4 | CTC transmission conditions<br>0: After one PPR signal received<br>1: After four PPR signals received (ITU-T standard) | 0: When using ECM in non-standard (NSF/NSS) mode, the machine sends a CTC to drop back the modem rate after receiving a PPR, if the following condition is met in communications at 14.4, 12.0, 9.6, and 7.2 kbps.<br>$\sqrt{\text{NTransmit} \leq \text{NResend}}$<br>NTransmit- Number of transmitted frames<br>NResend- Number of frames to be retransmitted<br><br>1: When using ECM, the machine sends a CTC to drop back the modem rate after receiving four PPRs.<br><br>PPR, CTC: These are ECM protocol signals.<br>This bit is not effective in V.34 communications. |
| 5 | Modem rate used for the next page after receiving a negative code (RTN or PIN)<br>0: No change, 1: Fallback | 1: The machine’s tx modem rate will fall back before sending the next page if a negative code is received. This bit is ignored if ECM is being used. |
| 6 | **Not used** | Do not change the settings. |
| 7 | **Not used** | Do not change the settings. |

| **G3-2 Switch 04 [SP No. 1-106-005]** | | |
|---|---|---|
| **No** | **FUNCTION** | **COMMENTS** |

| | | |
|---|---|---|
| 0-3 | Training error detection threshold | 0 - F (Hex); 0 - 15 bits<br>If the number of error bits in the received TCF is below this threshold, the machine informs the sender that training has succeeded. |
| 4-7 | **Not used** | Do not change the settings. |

**G3-2 Switch 05 [SP No. 1-106-006]**

| No | FUNCTION | | | | | COMMENTS |
|---|---|---|---|---|---|---|
| 0-3 | Initial Tx modem rate | | | | | These bits set the initial starting modem rate for transmission.<br>Use the dedicated transmission parameters if you need to change this for specific receivers.<br>If a modem rate 14.4 kbps or slower is selected, V.8 protocol should be disabled manually.<br>**Cross reference**<br>V.8 protocol on/off - G3 switch 03, bit2 |
| | Bit 3 | Bit 2 | Bit 1 | Bit 0 | bps | |
| | 0 | 0 | 0 | 1 | 2.4k | |
| | 0 | 0 | 1 | 0 | 4.8k | |
| | 0 | 0 | 1 | 1 | 7.2k | |
| | 0 | 1 | 0 | 0 | 9.6k | |
| | 0 | 1 | 0 | 1 | 12.0k | |
| | 0 | 1 | 1 | 0 | 14.4k | |
| | 0 | 1 | 1 | 1 | 16.8k | |
| | 1 | 0 | 0 | 0 | 19.2k | |
| | 1 | 0 | 0 | 1 | 21.6k | |
| | 1 | 0 | 1 | 0 | 24.0k | |
| | 1 | 0 | 1 | 1 | 26.4k | |
| | 1 | 1 | 0 | 0 | 28.8k | |
| | 1 | 1 | 0 | 1 | 31.2k | |
| | 1 | 1 | 1 | 0 | 33.6k | |
| | Other settings - **Not used** | | | | | |

Bit Switches

| | | |
|---|---|---|
| 4-5 | Initial modem type for 9.6 k or 7.2 kbps.<br>Bit 5: 0, Bit 4: 0 = V.29<br>Bit 5: 0, Bit 4: 1 = V.17<br>Bit 5: 1, Bit 4: 0 = V.34<br>Bit 5: 1, Bit 4: 1 = **Not used** | These bits set the initial modem type for 9.6 and 7.2 kbps, if the initial modem rate is set at these speeds. |
| 6-7 | **Not used** | Do not change the settings. |

**G3-2 Switch 06 [SP No. 1-106-007]**

| No | FUNCTION | | | | | COMMENTS |
|---|---|---|---|---|---|---|
| 0-3 | Initial Rx modem rate | | | | | ▪ These bits set the initial starting modem rate for reception.<br>▪ Use a lower setting if high speeds pose problems during reception.<br>▪ If a modem rate 14.4 kbps or slower is selected, V.8 protocol should be disabled manually.<br>**Cross reference**:<br>V.8 protocol on/off - G3 switch 03, bit2 |
| | Bit 3 | Bit 2 | Bit 1 | Bit 0 | bps | |
| | 0 | 0 | 0 | 1 | 2.4k | |
| | 0 | 0 | 1 | 0 | 4.8k | |
| | 0 | 0 | 1 | 1 | 7.2k | |
| | 0 | 1 | 0 | 0 | 9.6k | |
| | 0 | 1 | 0 | 1 | 12.0k | |
| | 0 | 1 | 1 | 0 | 14.4k | |
| | 0 | 1 | 1 | 1 | 16.8k | |
| | 1 | 0 | 0 | 0 | 19.2k | |
| | 1 | 0 | 0 | 1 | 21.6k | |
| | 1 | 0 | 1 | 0 | 24.0k | |
| | 1 | 0 | 1 | 1 | 26.4k | |
| | 1 | 1 | 0 | 0 | 28.8k | |
| | 1 | 1 | 0 | 1 | 31.2k | |

| | | | | | | |
|---|---|---|---|---|---|---|
| | 1 | 1 | 1 | 0 | 33.6k | |
| | Other settings - **Not used** | | | | | |
| 4-7 | Modem types available for reception | | | | | ▪ The setting of these bits is used to inform the transmitting terminal of the available modem type for the machine in receive mode.<br>▪ If V.34 is not selected, V.8 protocol must be disabled manually.<br>Cross reference:<br>V.8 protocol on/off - G3 switch 03, bit2 |
| | Bit 7 | Bit 6 | Bit 5 | Bit 4 | Setting | |
| | 0 | 0 | 0 | 1 | V.27ter | |
| | 0 | 0 | 1 | 0 | V.27ter,V.29 | |
| | 0 | 0 | 1 | 1 | V.27ter, V.29, V.33 | |
| | 0 | 1 | 0 | 0 | V.27ter, V.29, V.17/V.33 | |
| | 0 | 1 | 0 | 1 | V.27ter, V.29, V.17/V33, V.34 | |
| | Other settings - **Not used** | | | | | |

| **G3-2 Switch 07 [SP No. 1-106-008]** | | |
|---|---|---|
| **No** | **FUNCTION** | **COMMENTS** |
| 0-1 | PSTN cable equalizer<br>(tx mode: Internal)<br>Bit 1: 0, Bit 0: 0 = None<br>Bit 1: 0, Bit 0: 1 = Low<br>Bit 1: 1, Bit 0: 0 = Medium<br>Bit 1: 1, Bit 0: 1 = High | Use a higher setting if there is signal loss at higher frequencies because of the length of wire between the modem and the telephone exchange.<br>Use the dedicated transmission parameters for specific receivers.<br>Also, try using the cable equalizer if one or more of the following symptoms occurs.<br>Communication error<br>Modem rate fallback occurs frequently.<br>Note |

Bit Switches

| | | |
|---|---|---|
| | | ▪ This setting is not effective in V.34 communications. |
| 2-3 | PSTN cable equalizer<br>(rx mode: Internal)<br>Bit 3: 0, Bit 2: 0 = None<br>Bit 3: 0, Bit 2: 1 = Low<br>Bit 3: 1, Bit 2: 0 = Medium<br>Bit 3: 1, Bit 2: 1 = High | Use a higher setting if there is signal loss at higher frequencies because of the length of wire between the modem and the telephone exchange.<br>Also, try using the cable equalizer if one or more of the following symptoms occurs.<br>Communication error with error codes such as 0-20, 0-23, etc.<br>Modem rate fallback occurs frequently.<br>Note<br>▪ This setting is not effective in V.34 communications. |
| 4 | PSTN cable equalizer<br>(V.8/V.17 rx mode: External)<br>0: Disabled<br>1: Enabled | Keep this bit at “1”. |
| 5 | **Not used** | Do not change the settings. |
| 6 | Parameter selection for dial tone detection<br>0: Normal parameter<br>1: Specific parameter | 0: This uses the fixed table in the ROM for dial tone detection.<br>1: This uses the specific parameter adjusted with SRAM (69ECBEH - 69ECDEH). Select this if the dial tone cannot be detected when the "Normal parameter: 0" is selected. |
| 7 | **Not used** | Do not change the settings. |

| |
|---|
| **G3-2 Switch 08 - Not used** (do not change the settings) |
| **G3-2 Switch 09 - Not used** (do not change the settings) |

| **G3-2 Switch 0A [SP No. 1-106-011]** | | |
|---|---|---|
| **No** | **FUNCTION** | **COMMENTS** |

| | | |
|---|---|---|
| 0-1 | Maximum allowable carrier drop during image data reception<br>Bit 1: 0, Bit 0: 0 = 200 (ms)<br>Bit 1: 0, Bit 0: 1 = 400 (ms)<br>Bit 1: 1, Bit 0: 0 = 800 (ms)<br>Bit 1: 1, Bit 0: 1 = **Not used** | These bits set the acceptable modem carrier drop time.<br>Try using a longer setting if error code 0-22 is frequent. |
| 2 | Select cancellation of high-speed RX if carrier signal lost while receiving<br>0: Off<br>1: On | This switch setting determines if high-speed receiving ends if the carrier signal is lost when receiving during non-ECM mode |
| 3 | **Not used** | Do not change the settings |
| 4 | Maximum allowable frame interval during image data reception.<br>0: 5 s 1: 13 s | This bit set the maximum interval between EOL (end-of-line) signals and the maximum interval between ECM frames from the other end.<br>Try using a longer setting if error code 0-21 is frequent. |
| 5 | **Not used** | Do not change the settings. |
| 6 | Reconstruction time for the first line in receive mode<br>0: 6 s 1: 12 s | When the sending terminal is controlled by a computer, there may be a delay in receiving page data after the local machine accepts set-up data and sends CFR. This is outside the T.30 recommendation. But, if this delay occurs, set this bit to 1 to give the sending machine more time to send data.<br>Refer to error code 0-20.<br>ITU-T T.30 recommendation: The first line should come within 5 s of CFR. |
| 7 | **Not used** | Do not change the settings. |

| |
|---|
| **G3-2 Switch 0B - Not used** (do not change the settings.) |

Bit Switches

| |
|---|
| **G3-2 Switch 0C - Not used** (do not change the settings.) |
| **G3-2 Switch 0D - Not used** (do not change the settings) |
| **G3-2 Switch 0E - Not used** (do not change the settings) |
| **G3-2 Switch 0F - Not used** (do not change the settings) |

## 4.3.7 IP FAX SWITCHES

| IP Fax Switch 00 [SP No. 1-111-001] | | |
|---|---|---|
| **No.** | **FUNCTION** | **COMMENTS** |
| 0 | **Not used** | Do not change this setting. |
| 1 | IP Fax Transport<br>0: TCP, 1: UDP | Selects TCP or UDP protocol for IP-Fax |
| 2 | IP Fax single port selection<br>0: OFF, 1: ON (enable) | Selects single data port. |
| 3 | IP Fax double ports (single data port) selection<br>0: OFF, 1: ON (enable) | Selects whether IP-Fax uses a double port. |
| 4 | IP Fax Gatekeeper<br>0: OFF, 1: ON (enable) | Enables/disables the communication via the gatekeeper for IP-Fax. |
| 5 | IP Fax T30 bit signal reverse<br>0: LSB first, 1: MSB first | Reverses the T30 bit signal. |
| 6 | IP Fax max bit rate setting<br>0: Not affected, 1: Affected | When "0" is selected, the max bit rate does not affect the value of the DIS/DCS.<br>When "1" is selected, the max bit rate affects the value of the DIS/DCS. |
| 7 | IP Fax received telephone number confirmation<br>0: No confirmation, 1: Confirmation | When "0" is selected, fax data is received without checking the telephone number.<br>When "1" is selected, fax data is received only when confirming that the telephone number from the sender matches the registered telephone number in this machine. If this confirmation fails, the line is disconnected. |

Bit Switches

| IP-Fax Switch 01 | | | | | | |
|---|---|---|---|---|---|---|
| **No.** | **FUNCTION** | | | | | **COMMENTS** |
| 0-3 | Select IP FAX Delay Level | | | | | Raise the level by selecting a higher setting if too many transmission errors are occurring on the network.<br>If TCP/UDP is enabled on the network, raise this setting on the T.30 machine. Increasing the delay time allows the recovery of more lost packets.<br>If only UDP is enabled, increase the number of redundant packets.<br>Level 1~2: 3 Redundant packets<br>Level 3: 4 Redundant packets |
| | Bit3 | Bit2 | Bit1 | Bit0 | Setting | |
| | 0 | 0 | 0 | 0 | Level 0 | |
| | 0 | 0 | 0 | 1 | Level 1 | |
| | 0 | 0 | 1 | 0 | Level 2 | |
| | 0 | 0 | 1 | 1 | Level 3 | |
| | | | | | | |
| 4-7 | IP Fax preamble wait time setting | | | | | Selects the preamble wait time.<br>[00 to 0f]<br>There are 16 values in this 4-bit binary switch combination.<br>Waiting time: set value level x 100 ms<br>Max: 0f (1500 ms) Min: 00 (No wait time)<br>The default is "0000" (00H). |

| IP Fax Switch 02 [SP No. 1-111-003] | | |
|---|---|---|
| **No.** | **FUNCTION** | **COMMENTS** |
| 0 | IP Fax bit signal reverse setting<br>0: Maker code setting<br>1: Internal bit switch setting | When "0" is selected, the bit signal reverse method is decided by the maker code.<br>When "1" is selected, the bit signal reverse method is decided by the internal bit switch.<br>When communicating between IP Fax devices, LSB first is selected.) |
| 1 | IP Fax transmission speed setting<br>0: Modem speed<br>1: No limitation | Selects the transmit speed for IP Fax communication. |

| | | |
|---|---|---|
| 2 | SIP transport setting<br>0: TCP<br>1: UDP | This bit switch sets the transport that has priority for receiving IP Fax data.<br>This function is activated only when the sender has both TCP and UDP. |
| 3 | CCM connection<br>0: No CCM connection<br>1: CCM connection | When "1" is selected, only the connection call message with H.323 or no tunneled H.245 is transmitted via CCM. |
| 4 | Message reception selection from non-registered SIP server<br>0: Answer<br>1: Not answer | 0: This answers the INVITE message from the SIP server not registered for the machine.<br>1: This does not receive the INVITE message from the SIP server not registered for the machine and send a refusal message. |
| 5 | ECM communication setting<br>0: No limit for image compression<br>1: Limit for image compression | 0: This does not limit the type of the image compression with ECM communication.<br>1: When the other end machine is Ciscco, this permits the image compression other than JBIG or MMR with ECM communication. |
| 6-7 | **Not used** | Do not change these settings. |

| **IP Fax Switch 03 [SP No. 1-111-004]** | | |
|---|---|---|
| **No.** | **FUNCTION** | **COMMENTS** |
| 0 | Effective field limitation for G3 standard function information<br>0: OFF, 1: 4byte (DIS) | Limits the effective field for standard G3 function information. |
| 1 | Switching between G3 standard and G3 non standard<br>0: Enable switching<br>1: G3 standard only | Enables/disables switching between G3 standard and G3 non-standard. |
| 2 | Not used. | Do not change this setting. |

Bit Switches

| | | |
|---|---|---|
| 3 | ECM frame size selection at transmitting<br>0: 256byte, 1: 64byte | Selects the ECM frame size for sending. |
| 4 | DIS detection times for echo prevention<br>0: 1 time, 1: 2 times | Sets the number of times for DIS to detect echoes. |
| 5 | CTC transmission selection<br>0: PPRx1<br>1: PPRx4 | When "0" is selected, the transmission condition is decided by error frame numbers. When "1" is selected, the transmission condition is based on the ITU-T method. |
| 6 | Shift down setting at receiving negative code<br>0: OFF, 1: ON | Selects whether to shift down when negative codes are received. |
| 7 | **Not used** | Do not change this setting. |

| **IP Fax Switch 04 [SP No. 1-111-005]** | | |
|---|---|---|
| **No.** | **FUNCTION** | **COMMENTS** |
| 0 | TCF error threshold | Sets the TCF error threshold level.<br>[00 to 0f]<br>The default is "1111" (0fH). |
| 1 | | |
| 2 | | |
| 3 | | |
| 4-7 | **Not used** | Do not change these settings. |

| **IP Fax Switch 05 [SP No. 1-111-006]** | | |
|---|---|---|
| **No.** | **FUNCTION** | **COMMENTS** |
| 0-3 | Modem bit rate setting for transmission<br>Sets the modem bit rate for transmission. The default is "0110" (14.4K bps). | |

| | | | | | |
|---|---|---|---|---|---|
| | Bit 3 | Bit 2 | Bit 1 | Bit 0 | |
| | 0 | 0 | 0 | 1 | 2400 bps |
| | 0 | 0 | 1 | 1 | 4800 bps |
| | 0 | 0 | 1 | 1 | 7200 bps |
| | 0 | 1 | 0 | 0 | 9600 bps |
| | 0 | 1 | 0 | 1 | 12.0 Kbps |
| | 0 | 1 | 1 | 0 | 14.4 Kbps |
| 4-5 | Modem setting for transmission<br>Sets the modem for transmission.<br>The default is "00" (V29).<br>Bit 5: 0, Bit 4: 0 = V29<br>Bit 5: 0, Bit 4: 1 = V17<br>Bit 5: 1, Bit 4: 0 = V34*<br>Bit 5: 1, Bit 4: 1 = **Not used**<br>*V34 is not supported for IP-Fax communication. | | | | |
| 6-7 | **Not used** | | Do not change these settings. | | |

| **IP Fax Switch 06 [SP No. 1-111-007]** | | | | | |
|---|---|---|---|---|---|
| **No.** | **FUNCTION** | | **COMMENTS** | | |
| 0-3 | Modem bit rate setting for reception<br>Sets the modem bit rate for reception. The default is "0110" (14.4K bps). | | | | |
| | Bit 3 | Bit 2 | Bit 1 | Bit 0 | |
| | 0 | 0 | 0 | 1 | 2400 bps |
| | 0 | 0 | 1 | 0 | 4800 bps |
| | 0 | 0 | 1 | 1 | 7200 bps |
| | 0 | 1 | 0 | 0 | 9600 bps |

Bit Switches

| | | | | | |
|---|---|---|---|---|---|
| | 0 | 1 | 0 | 1 | 12.0 Kbps |
| | 0 | 1 | 1 | 0 | 14.4 Kbps |
| | | | | | |
| 4-7 | Modem setting for reception<br>Sets the modem type for reception. The default is "0100" (V27ter, V29, V17). | | | | |
| | Bit 7 | Bit 6 | Bit 5 | Bit 4 | |
| | 0 | 0 | 0 | 1 | V27ter |
| | 0 | 0 | 1 | 0 | V27ter, V29 |
| | 0 | 0 | 1 | 1 | V27ter, V29, V33 (invalid) |
| | 0 | 1 | 0 | 0 | V27ter, V29, V17 |
| | 0 | 1 | 0 | 1 | V27ter, V29, V17, V34* |
| | *V34 is not supported for IP-Fax communication. | | | | |

| **IP Fax Switch 07 [SP No. 1-111-008]** | | |
|---|---|---|
| **No.** | **FUNCTION** | **COMMENTS** |
| 0 | TSI information<br>0: Not added, 1: Added | Adds or does not add TSI information to NSS(S). |
| 1 | DCN transmission setting at T1 timeout<br>0: Not transmitted, 1: Transmitted | Transmits or does not transmit DCN at T1 timeout. |
| 2 | **Not used** | Do not change this setting. |
| 3 | Hang up setting at DIS reception disabled<br>0: No hang up<br>1: Hang up after transmitting DCN | Sets whether the machine disconnects after DIS reception. |

| | | |
|---|---|---|
| 4 | Number of times for training<br>0: 1 time, 1: 2 times | Selects the number of times training is done at the same bit rate. |
| 5 | Space CSI transmission setting at no CSI registration<br>0: Not transmitted, 1: Transmitted | When "0" is selected, frame data is enabled. When "1" is selected, the transmitted data is all spaces. |
| 6-7 | **Not used** | Do not change these settings. |

| **IP Fax Switch 08 [SP No. 1-111-009]** | | |
|---|---|---|
| **No.** | **FUNCTION** | **COMMENTS** |
| 0-1 | T1 timer adjustment<br>Adjusts the T1 timer.<br>The default is "00" (35 seconds).<br>Bit 1: 0, Bit 0: 0 = 35 sec<br>Bit 1: 0, Bit 0: 1 = 40 sec<br>Bit 1: 1, Bit 0: 0 = 50 sec<br>Bit 1: 1, Bit 0: 1 = 60 sec | - |
| 2-3 | T4 timer adjustment<br>Adjust the T4 timer.<br>The default is "00" (3 seconds).<br>Bit 3: 0, Bit 2: 0 = 3 sec<br>Bit 3: 0, Bit 2: 1 = 3.5 sec<br>Bit 3: 1, Bit 2: 0 = 4 sec<br>Bit 3: 1, Bit 2: 1 = 5 sec | - |
| 4-5 | T0 timer adjustment<br>Bit 5: 0, Bit 4: 0 = 75 sec<br>Bit 5: 0, Bit 4: 1 = 120 sec<br>Bit 5: 1, Bit 4: 0 = 180 sec<br>Bit 5: 1, Bit 4: 1 = 240 sec | Adjusts the fail safe timer. This timer sets the interval between "setup" data transmission and T.38 phase decision. If your destination return is late on the network or G3 fax return is late, adjust the longer interval timer.<br>The default is "00" (75 seconds). |
| 6-7 | **Not used** | Do not change these settings. |

Bit Switches

| IP Fax Switch 09 [SP No. 1-111-010] | | |
|---|---|---|
| **No.** | **FUNCTION** | **COMMENTS** |
| 0 | Network I/F setting for SIP connection<br>0: IPv4<br>1: IPv6. | Selects the connection type (IPV4 or IPV6) to connect to the SIP server. |
| 1 | Network I/F setting for Fax communication<br>0: Same setting as SIP server connection<br>1: Automatic setting | 0: The I/F setting for fax communication follows the setting for SIP server connection.<br>1: The negotiation between the SIP server and the device decides whether IPv4 or IPv6 is used for the I/F setting for fax communication. |
| 2 | Record-route setting<br>0: Disable<br>1: Enable | 0: Disables the record-route function of the SIP server.<br>1: Enables the record-route function of the SIP server. |
| 3-7 | **Not used** | Do not change these settings. |

## 4.4 NCU PARAMETERS

The following tables give the RAM addresses and the parameter calculation units that the machine uses for ringing signal detection and automatic dialing. The factory settings for each country are also given. Most of these must be changed by RAM read/write (SP2-102), but some can be changed using NCU Parameter programming (SP2-103, 104 and 105); if SP2-103, 104 and 105 can be used, this will be indicated in the Remarks column. The RAM is programmed in hex code unless (BCD) is included in the Unit column.

Note

- The following addresses describe settings for the standard NCU.
- Change the fourth digit from “5” to “6” (e.g. 680500 to 680600) for the settings for the first optional G3 interface unit and from “5” to “7” (e.g. 680700) for the settings for the second optional G3 interface unit.

| Address | Function | | | | | |
|---|---|---|---|---|---|---|
| 680500 | Country/Area code for NCU parameters | | | | | |
| | Use the Hex value to program the country/area code directly into this address, or use the decimal value to program it using SP2-103-001 | | | | | |
| | **Country /Area** | **Decimal** | **Hex** | **Country /Area** | **Decimal** | **Hex** |
| | France | 00 | 00 | USA | 17 | 11 |
| | Germany | 01 | 01 | Asia | 18 | 12 |
| | UK | 02 | 02 | Hong Kong | 20 | 14 |
| | Italy | 03 | 03 | South Africa | 21 | 15 |
| | Austria | 04 | 04 | Australia | 22 | 16 |
| | Belgium | 05 | 05 | New Zealand | 26 | 17 |
| | Denmark | 06 | 06 | Singapore | 24 | 18 |
| | Finland | 07 | 07 | Malaysia | 25 | 19 |

NCU Parameters

| Address | Function | | | | | |
|---|---|---|---|---|---|---|
| | Ireland | 08 | 08 | China | 26 | 1A |
| | Norway | 09 | 09 | Taiwan | 27 | 1B |
| | Sweden | 10 | 0A | Korea | 28 | 1C |
| | Switzerland | 11 | 0B | Turkey | 32 | 20 |
| | Portugal | 12 | 0C | Greece | 33 | 21 |
| | Holland | 13 | 0D | Hungary | 34 | 22 |
| | Spain | 14 | 0E | Czech | 35 | 23 |
| | Israel | 15 | 0F | Poland | 36 | 24 |

| Address | Function | Unit | Remarks |
|---|---|---|---|
| 680501 | Line current detection time | 20 ms | Line current detection is disabled.<br>Line current is not detected if 680501 contains FF. |
| 680502 | Line current wait time | | |
| 680503 | Line current drop detect time | | |
| 680504 | PSTN dial tone frequency upper limit (high byte) | Hz (BCD) | If both addresses contain FF(H), tone detection is disabled. |
| 680505 | PSTN dial tone frequency upper limit (low byte) | | |
| 680506 | PSTN dial tone frequency lower limit (high byte) | Hz (BCD) | If both addresses contain FF(H), tone detection is disabled. |
| 680507 | PSTN dial tone frequency lower limit (low byte) | | |
| 680508 | PSTN dial tone detection time | 20 ms | If 680508 contains FF(H), the machine |
| 680509 | PSTN dial tone reset time (LOW) | | |

| Address | Function | Unit | Remarks |
|---|---|---|---|
| 68050A | PSTN dial tone reset time (HIGH) | | pauses for the pause time (address 68050D / 68050E).<br>Italy: See Note 2. |
| 68050B | PSTN dial tone continuous tone time | | |
| 68050C | PSTN dial tone permissible drop time | | |
| 68050D | PSTN wait interval (LOW) | | - |
| 68050E | PSTN wait interval (HIGH) | | |
| 68050F | PSTN ring-back tone detection time | 20 ms | Detection is disabled if this contains FF. |
| 680510 | PSTN ring-back tone off detection time | 20 ms | - |
| 680511 | PSTN detection time for silent period after ring-back tone detected (LOW) | 20 ms | - |
| 680512 | PSTN detection time for silent period after ring-back tone detected (HIGH) | 20 ms | - |
| 680513 | PSTN busy tone frequency upper limit (high byte) | Hz (BCD) | If both addresses contain FF(H), tone detection is disabled. |
| 680514 | PSTN busy tone frequency upper limit (low byte) | | |
| 680515 | PSTN busy tone frequency lower limit (high byte) | Hz (BCD) | If both addresses contain FF(H), tone detection is disabled. |
| 680516 | PSTN busy tone frequency lower limit (low byte) | | |
| 680517 | PABX dial tone frequency upper limit (high byte) | Hz (BCD) | If both addresses contain FF(H), tone |

NCU Parameters

| Address | Function | Unit | Remarks |
|---|---|---|---|
| 680518 | PABX dial tone frequency upper limit (low byte) | | detection is disabled. |
| 680519 | PABX dial tone frequency lower limit (high byte) | Hz (BCD) | If both addresses contain FF(H), tone detection is disabled. |
| 68051A | PABX dial tone frequency lower limit (low byte) | | |
| 68051B | PABX dial tone detection time | 20 ms | If 68051B contains FF, the machine pauses for the pause time (680520 / 680521). |
| 68051C | PABX dial tone reset time (LOW) | | |
| 68051D | PABX dial tone reset time (HIGH) | | |
| 68051E | PABX dial tone continuous tone time | | |
| 68051F | PABX dial tone permissible drop time | | |
| 680520 | PABX wait interval (LOW) | | - |
| 680521 | PABX wait interval (HIGH) | | |
| 680522 | PABX ringback tone detection time | 20 ms | If both addresses contain FF(H), tone detection is disabled. |
| 680523 | PABX ringback tone off detection time | 20 ms | |
| 680524 | PABX detection time for silent period after ringback tone detected (LOW) | 20 ms | If both addresses contain FF(H), tone detection is disabled. |
| 680525 | PABX detection time for silent period after ringback tone detected (HIGH) | 20 ms | |
| 680526 | PABX busy tone frequency upper limit (high byte) | Hz (BCD) | If both addresses contain FF(H), tone |

| Address | Function | Unit | Remarks |
|---|---|---|---|
| 680527 | PABX busy tone frequency upper limit (low byte) | | detection is disabled. |
| 680528 | PABX busy tone frequency lower limit (high byte) | Hz (BCD) | If both addresses contain FF(H), tone detection is disabled. |
| 680529 | PABX busy tone frequency lower limit (low byte) | | |
| 68052A | Busy tone ON time: range 1 | 20 ms | - |
| 68052B | Busy tone OFF time: range 1 | | |
| 68052C | Busy tone ON time: range 2 | | |
| 68052D | Busy tone OFF time: range 2 | | |
| 68052E | Busy tone ON time: range 3 | | |
| 68052F | Busy tone OFF time: range 3 | 20 ms | |
| 680530 | Busy tone ON time: range 4 | | |
| 680531 | Busy tone OFF time: range 4 | | |
| 680532 | Busy tone continuous tone detection time | | |
| 680533 | Busy tone signal state time tolerance for all ranges, and number of cycles required for detection (a setting of 4 cycles means that ON-OFF-ON or OFF-ON-OFF must be detected twice).<br>Tolerance (±)<br>Bit 1: 0, Bit 0: 0 = 75% Bits 2 and 3 must always be kept at 0.<br>Bit 1: 0, Bit 0: 0 = 50% Bits 2 and 3 must always be kept at 0.<br>Bit 1: 0, Bit 0: 0 = 25%<br>Bit 1: 0, Bit 0: 0 = 12.5%<br>Bits 7, 6, 5, 4 - number of cycles required for cadence detection | | |
| 680534 | International dial tone frequency upper limit (high byte) | Hz (BCD) | If both addresses contain FF(H), tone |

NCU Parameters

| Address | Function | Unit | Remarks |
|---|---|---|---|
| 680535 | International dial tone frequency upper limit (low byte) | | detection is disabled. |
| 680536 | International dial tone frequency lower limit (high byte) | Hz (BCD) | If both addresses contain FF(H), tone detection is disabled. |
| 680537 | International dial tone frequency lower limit (low byte) | | |
| 680538 | International dial tone detection time | 20 ms | If 680538 contains FF, the machine pauses for the pause time (68053D / 68053E).<br>Belgium: See Note 2. |
| 680539 | International dial tone reset time (LOW) | | |
| 68053A | International dial tone reset time (HIGH) | | |
| 68053B | International dial tone continuous tone time | | |
| 68053C | International dial tone permissible drop time | | |
| 68053D | International dial wait interval (LOW) | | - |
| 68053E | International dial wait interval (HIGH) | | |
| 68053F | Country dial tone upper frequency limit (HIGH) | Hz (BCD) | If both addresses contain FF(H), tone detection is disabled. |
| 680540 | Country dial tone upper frequency limit (LOW) | | |
| 680541 | Country dial tone lower frequency limit (HIGH) | | If both addresses contain FF(H), tone detection is disabled. |
| 680542 | Country dial tone lower frequency | | |

| Address | Function | Unit | Remarks |
|---|---|---|---|
| | limit (LOW) | | |
| 680543 | Country dial tone detection time | 20 ms | If 680543 contains FF, the machine pauses for the pause time (680548 / 680549). |
| 680544 | Country dial tone reset time (LOW) | | |
| 680545 | Country dial tone reset time (HIGH) | | |
| 680546 | Country dial tone continuous tone time | - | - |
| 680547 | Country dial tone permissible drop time | 20 ms | - |
| 680548 | Country dial wait interval (LOW) | | |
| 680549 | Country dial wait interval (HIGH) | | |
| 68054A | Time between opening or closing the DO relay and opening the OHDI relay | 1 ms | See Notes 3, 6 and 8. SP2-103-012 (parameter 11). |
| 68054B | Break time for pulse dialing | 1 ms | See Note 3. SP2-103-013 (parameter 12). |
| 68054C | Make time for pulse dialing | 1 ms | See Note 3. SP2-103-014 (parameter 13). |
| 68054D | Time between final OHDI relay closure and DO relay opening or closing | 1 ms | See Notes 3, 6 and 8. SP2-103-015 (parameter 14). This parameter is only valid in Europe. |
| 68054E | Minimum pause between dialed digits (pulse dial mode) | 20 ms | See Note 3 and 8. SP2-103-016 |

NCU Parameters

| Address | Function | Unit | Remarks |
|---|---|---|---|
| | | | (parameter 15). |
| 68054F | Time waited when a pause is entered at the operation panel | | SP2-103-017 (parameter 16). See Note 3. |
| 680550 | DTMF tone on time | 1 ms | SP2-103-018 (parameter 17). |
| 680551 | DTMF tone off time | | SP2-103-019 (parameter 18). |
| 680552 | Tone attenuation level of DTMF signals while dialing | -N x 0.5 –3.5 dBm | SP2-103-020 (parameter 19). See Note 5. |
| 680553 | Tone attenuation value difference between high frequency tone and low frequency tone in DTMF signals | -dBm x 0.5 | SP2-103-021 (parameter 20). The setting must be less than –5dBm, and should not exceed the setting at 680552h above. See Note 5. |
| 680554 | PSTN: DTMF tone attenuation level after dialling | -N x 0.5 –3.5 dBm | SP2-103-022 (parameter 21). See Note 5. |
| 680555 | ISDN: DTMF tone attenuation level after dialling | -dBm x 0.5 | See Note 5 |
| 680556 | Not used | - | Do not change the settings. |
| 680557 | Time between 68054Dh (NCU parameter 14) and 68054Eh (NCU parameter 15) | 1 ms | This parameter takes effect when the country code is set to France. |
| 680558 | Not used | - | Do not change the |

| Address | Function | Unit | Remarks |
|---|---|---|---|
| | | | setting. |
| 680559 | Grounding time (ground start mode) | 20 ms | The Gs relay is closed for this interval. |
| 68055A | Break time (flash start mode) | 1 ms | The OHDI relay is open for this interval. |
| 68055B | International dial access code (High) | BCD | For a code of 100:<br>68055B - F1<br>68055C - 00 |
| 68055C | International dial access code (Low) | | |
| 68055D | PSTN access pause time | 20 ms | This time is waited for each pause input after the PSTN access code. If this address contains FF[H], the pause time stored in address 68054F is used.<br>Do not set a number more than 7 in the UK. |
| 68055E | Progress tone detection level, and cadence detection enable flags | Bit 7: 0, Bit 6: 0, Bit 5: 0 = -25.0 dBm<br>Bit 7: 0, Bit 6: 0, Bit 5: 1 = -35.0 dBm<br>Bit 7: 0, Bit 6: 1, Bit 5: 0 = -30.0 dBm<br>Bit 7: 1, Bit 6: 0, Bit 5: 0 = -40.0 dBm<br>Bit 7: 1, Bit 6: 1, Bit 5: 0 = -49.0 dBm<br>Bits 2, 0 - See Note 2. | |
| 68055F<br>To<br>680564 | **Not used** | - | Do not change the settings. |
| 680565 | Long distance call prefix (HIGH) | BCD | For a code of 0:<br>680565 – FF<br>680566 - FF |
| 680566 | Long distance call prefix (LOW) | BCD | |

NCU Parameters

| Address | Function | Unit | Remarks |
|---|---|---|---|
| 680567 to 680571 | **Not used** | - | Do not change the settings. |
| 680572 | Acceptable ringing signal frequency: range 1, upper limit | 1000/ N (Hz). | SP2-103-003 (parameter 02). |
| 680573 | Acceptable ringing signal frequency: range 1, lower limit | | SP2-103-004 (parameter 03). |
| 680574 | Acceptable ringing signal frequency: range 2, upper limit | | SP2-103-005 (parameter 04). |
| 680575 | Acceptable ringing signal frequency: range 2, lower limit | | SP2-103-006 (parameter 05). |
| 680576 | Number of rings until a call is detected | 1 | SP2-103-007 (parameter 06). The setting must not be zero. |
| 680577 | Minimum required length of the first ring | 20 ms | See Note 4. SP2-103-008 (parameter 07). |
| 680578 | Minimum required length of the second and subsequent rings | 20 ms | SP2-103-009 (parameter 08). |
| 680579 | Ringing signal detection reset time (LOW) | 20 ms | SP2-103-010 (parameter 09). |
| 68057A | Ringing signal detection reset time (HIGH) | | SP2-103-011 (parameter 10). |
| 68057B to 680580 | **Not used** | - | Do not change the settings. |
| 680581 | Interval between dialing the last | 20 ms | Factory setting: 500 ms |

| Address | Function | Unit | Remarks |
|---|---|---|---|
| | digit and switching the Oh relay over to the external telephone when dialing from the operation panel in handset mode. | | |
| 680582 | Bits 0 and 1 - Handset off-hook detection time<br>Bit 1:0, Bit 0: 0 = 200 ms<br>Bit 1:0, Bit 0: 1 = 800 ms<br>Other Not used<br>Bits 2 and 3 - Handset on-hook detection time<br>Bit 3: 0, Bit 2: 0 = 200 ms<br>Bit 3: 0, Bit 2: 1 = 800 ms<br>Other Not used<br>Bits 4 to 7 - **Not used** | | - |
| 680583<br>To<br>6805A0 | **Not used** | - | Do not change the settings. |
| 6805A1 | Acceptable CED detection frequency upper limit (high byte) | BCD (Hz) | If both addresses contain FF(H), tone detection is disabled. |
| 6805A2 | Acceptable CED detection frequency upper limit (low byte) | | |
| 6805A3 | Acceptable CED detection frequency lower limit (high byte) | BCD (Hz) | If both addresses contain FF(H), tone detection is disabled. |
| 6805A4 | Acceptable CED detection frequency lower limit (low byte) | | |
| 6805A5 | CED detection time | 20 ms ± 20 ms | Factory setting: 200 ms |
| 6805A6 | Acceptable CNG detection frequency upper limit (high byte) | BCD (Hz) | If both addresses contain FF(H), tone detection is disabled. |
| 6805A7 | Acceptable CNG detection | | |

NCU Parameters

| Address | Function | Unit | Remarks |
|---|---|---|---|
| | frequency upper limit (low byte) | | |
| 6805A8 | Acceptable CNG detection frequency lower limit (high byte) | BCD (Hz) | If both addresses contain FF(H), tone detection is disabled. |
| 6805A9 | Acceptable CNG detection frequency lower limit (low byte) | | |
| 6805AA | **Not used** | - | Do not change the setting. |
| 6805AB | CNG on time | 20 ms | Factory setting: 500 ms |
| 6805AC | CNG off time | 20 ms | Factory setting: 3000 ms |
| 6805AD | Number of CNG cycles required for detection | - | The data is coded in the same way as address 680533. |
| 6805AE | **Not used** | - | Do not change the settings. |
| 6805AF | Acceptable AI short protocol tone (800Hz) detection frequency upper limit (high byte) | Hz (BCD) | If both addresses contain FF(H), tone detection is disabled. |
| 6805B0 | Acceptable AI short protocol tone (800Hz) detection frequency upper limit (low byte) | | |
| 6805B1 | Acceptable AI short protocol tone (800Hz) detection frequency lower limit (high byte) | Hz(BCD) | If both addresses contain FF(H), tone detection is disabled. |
| 6805B2 | Acceptable AI short protocol tone (800Hz) detection frequency lower limit (low byte) | | |
| 6805B3 | Detection time for 800 Hz AI short protocol tone | 20 ms | Factory setting: 360 ms |

| Address | Function | Unit | Remarks |
|---|---|---|---|
| 6805B4 | PSTN: Tx level from the modem | -N – 3 dBm | SP2-103-002 (parameter 01). |
| 6805B5 | PSTN: 1100 Hz tone transmission level | - N 6805B4 - 0.5N 6805B5 –3.5 (dB) See Note 7. | |
| 6805B6 | PSTN: 2100 Hz tone transmission level | - N6805B4 - 0.5N 6805B6 –3 (dB) See Note 7. | |
| 6805B7 | PABX: Tx level from the modem | - dBm | |
| 6805B8 | PABX: 1100 Hz tone transmission level | - N 6805B7 - 0.5N 6805B8 (dB) | |
| 6805B9 | PABX: 2100 Hz tone transmission level | - N 6805B7 - 0.5N 6805B9 (dB) | |
| 6805BD | Modem turn-on level (incoming signal detection level) | -37-0.5N (dBm) | |
| 6805BE to 6805C6 | **Not used** | - | Do not change the settings. |
| 6805C7 | Bits 0 to 3 – **Not used**<br>Bit 4 = V.34 protocol dump 0: Simple, 1: Detailed (default)<br>Bits 5 to 7 – **Not used.** | | |
| 6805C8 to 6805D9 | **Not used** | - | Do not change the settings. |
| 6805DA | T.30 T1 timer | 1 s | |
| 6805E0 bit 3 | Maximum wait time for post message | 0: 12 s<br>1: 30 s | 1: Maximum wait time for post message (EOP/EOM/MPS) can be changed to 30 s. Change this bit to “1” if |

NCU Parameters

<table>
<tr><th>Address</th><th colspan="6">Function</th><th>Unit</th><th>Remarks</th></tr>
<tr><td></td><td colspan="6"></td><td></td><td>communication errors occur frequently during V.17 reception.</td></tr>
<tr><td rowspan="8">6805E3</td><td colspan="6">Voltage setting to detect off-hook for voltage/DP detection for an externally connected line.</td><td>0: Auto<br>1: Fixed V</td><td rowspan="8">Do not change these settings</td></tr>
<tr><td colspan="7">Here is a summary of the fixed voltage settings (1: Fixed) for an externally connected line.</td></tr>
<tr><td>Bit 7</td><td>Bit 6</td><td>Bit 5</td><td>Bit 4</td><td colspan="3">-</td></tr>
<tr><td>0</td><td>0</td><td>0</td><td>0</td><td colspan="3">Not used</td></tr>
<tr><td>0</td><td>0</td><td>0</td><td>1</td><td colspan="3">2.75 V</td></tr>
<tr><td>0</td><td>0</td><td>1</td><td>0</td><td colspan="3">5.5 V</td></tr>
<tr><td>1</td><td>0</td><td>0</td><td>0</td><td colspan="3">22 V</td></tr>
<tr><td>1</td><td>1</td><td>1</td><td>1</td><td colspan="3">41.25 V</td></tr>
<tr><td rowspan="4">6805E4</td><td colspan="3" rowspan="4">Bit 1 sets the level of the call signal, Bit 3 sets the call signal impedance</td><td rowspan="2">Bit 1</td><td>0</td><td>RT=0 (Low)</td><td rowspan="4">-</td></tr>
<tr><td>1</td><td>RT=1 (High)</td></tr>
<tr><td rowspan="2">Bit 3</td><td>0</td><td>RZ=0 (High)</td></tr>
<tr><td>1</td><td>RZ=1 (Composite)</td></tr>
<tr><td rowspan="5">6805E5</td><td colspan="3" rowspan="4">Bit 0 sets the ring detection method, Bit 1 sets the ring detection method when fixed.</td><td rowspan="2">Bit 0</td><td>0</td><td>Auto</td><td rowspan="5">If any setting is changed, select a setting that is higher than the default setting.</td></tr>
<tr><td>1</td><td>Fixed</td></tr>
<tr><td rowspan="2">Bit 1</td><td>0</td><td>Use RDTP</td></tr>
<tr><td>1</td><td>Use RDTN</td></tr>
<tr><td colspan="7">Here is a summary of the voltages for the detection of off-hook for DP detection.</td></tr>
</table>

| Address | Function | | | | Unit | Remarks |
|---|---|---|---|---|---|---|
| | Bit 7 | Bit 6 | Bit 5 | Bit 4 | - | |
| | 0 | 0 | 0 | 0 | **Not used** | |
| | 0 | 0 | 0 | 1 | 2.75 V | |
| | 0 | 0 | 1 | 0 | 5.5 V | |
| | 1 | 0 | 0 | 0 | 22 V | |
| | 1 | 1 | 1 | 1 | 41.25 V | |

**NOTES**

1. If a setting is not required, store FF in the address.
2. Italy and Belgium only

   RAM address 68055E: the lower four bits have the following meaning.

   Bit 2 - 1: International dial tone cadence detection enabled (Belgium)

   Bit 1 - Not used

   Bit 0 - 1: PSTN dial tone cadence detection enabled (Italy)

   If bit 0 or bit 2 is set to 1, the functions of the following RAM addresses are changed.

   680508 (if bit 0 = 1) or 680538 (if bit 2 = 1): tolerance for on or off state duration (%), and number of cycles required for detection, coded as in address 680533.

   68050B (if bit 0 = 1) or 68053B (if bit 2 = 1): on time, hex code (unit = 20 ms)

   68050C (if bit 0 = 1) or 68053C (if bit 2 = 1): off time, hex code (unit = 20 ms)
3. Pulse dial parameters (addresses 68054A to 68054F) are the values for 10 pps. If 20 pps is used, the machine automatically compensates.
4. The first ring may not be detected until 1 to 2.5 wavelengths after the time specified by this parameter.
5. The calculated level must be between 0 and 10.

   The attenuation levels calculated from RAM data are:

   High frequency tone:

   - $-0.5 \times N_{680552}/_{680554} - 3.5$ dBm
   - $-0.5 \times N_{680555}$ dBm

   Low frequency tone:

NCU Parameters

- – 0.5 x ($N_{680552/680554}$ + $N_{680553}$) –3.5 dBm
- – 0.5 x ($N_{680555}$ + $N_{680553}$) dBm

Note

- $N_{680552}$, for example, means the value stored in address 680552(H)

6. 68054A: Europe - Between Ds opening and Di opening, France - Between Ds closing and Di opening
   68054D: Europe - Between Ds closing and Di closing, France - Between Ds opening and Di closing
7. Tone signals which frequency is lower than 1500Hz (e.g., 800Hz tone for AI short protocol) refer to the setting at 6805B5h. Tones which frequency is higher than 1500Hz refer to the setting at 6805B6h.
8. 68054A, 68054D, 68054E: The actual inter-digit pause (pulse dial mode) is the sum of the period specified by the RAM addresses 68054A, 68054D, and 68054E.

# 4.5 DEDICATED TRANSMISSION PARAMETERS

There are two sets of transmission parameters: Fax and E-mail
Each Quick Dial Key and Speed Dial Code has eight bytes of programmable parameters allocated to it. If transmissions to a particular machine often experience problems, store that terminal's fax number as a Quick Dial or Speed Dial, and adjust the parameters allocated to that number.
The programming procedure will be explained first. Then, the eight bytes will be described.

## 4.5.1 PROGRAMMING PROCEDURE

1. Set the bit 0 of System Bit Switch 00 to 1.
2. Enter Address Book Management mode ([User Tools]> System Settings> Key Operator> Address Book Management).
3. Select the address book that you want to program.
4. For the fax parameter, select "Fax Dest.", for the E-mail parameter, select "E-mail", then press "Start". Make sure that the LED of the Start button lights green.
5. The settings for the switch 00 are now displayed. Press the bit number that you wish to change.
6. To scroll through the parameter switches, either:
7. Select the next switch: press "Next" or Select the previous switch: "Prev." until the correct switch is displayed. Then go back to step 6.
8. After the setting is changed, press "OK".
9. After finishing, reset bit 0 of System Bit Switch 00 to 0.

## 4.5.2 PARAMETERS

### *Fax Parameters*

The initial settings of the following fax parameters are all FF(H) - all the parameters are disabled.

| **Switch 00** |
|---|
| **FUNCTION AND COMMENTS** |
| ITU-T T1 time (for PSTN G3 mode)<br>If the connection time to a particular terminal is longer than the NCU parameter setting, |

adjust this byte. The T1 time is the value stored in this byte (in hex code), multiplied by 1 second.

**Range:**

0 to 120 s (00h to 78h)

FFh - The local NCU parameter factory setting is used.

Do not program a value between 79h and FEh.

**Switch 01**

| No | FUNCTION | | | | | | COMMENTS |
|---|---|---|---|---|---|---|---|
| 0-4 | Tx level | | | | | | If communication with a particular remote terminal often contains errors, the signal level may be inappropriate. Adjust the Tx level for communications with that terminal until the results are better.<br>If the setting is “Disabled”, the NCU parameter 01 setting is used.<br>Note<br>▪ Do not use settings other than listed on the left. |
| | Bit4 | Bit3 | Bit2 | Bit1 | Bit0 | | |
| | 0 | 0 | 0 | 0 | 0 | 0 | |
| | 0 | 0 | 0 | 0 | 1 | –1 | |
| | 0 | 0 | 0 | 1 | 0 | –2 | |
| | 0 | 0 | 0 | 1 | 1 | –3 | |
| | 0 | 0 | 1 | 0 | 0 | –4 | |
| | ↓ | ↓ | ↓ | ↓ | ↓ | ↓ | |
| | 0 | 1 | 1 | 1 | 1 | –15 | |
| | 1 | 1 | 1 | 1 | 1 | Disabled | |
| 5-7 | Cable equalizer<br>Bit 7: 0, Bit 6: 0, Bit 5: 0 = None<br>Bit 7: 0, Bit 6: 0, Bit 5: 1 = Low<br>Bit 7: 0, Bit 6: 1, Bit 5: 0 = Medium<br>Bit 7: 0, Bit 6: 1, Bit 5: 1 = High<br>Bit 7: 1, Bit 6: 1, Bit 5: 1 = Disabled | | | | | | Use a higher setting if there is signal loss at higher frequencies because of the length of wire between the modem and the telephone exchange when calling the number stored in this Quick/Speed Dial.<br>Also, try using the cable equalizer if one or more of the following symptoms occurs.<br>Communication error with error |

| | | |
|---|---|---|
| | | codes such as 0-20, 0-23, etc.<br>Modem rate fallback occurs frequently.<br>Note<br>▪ Do not use settings other than listed on the left.<br>If the setting is “Disabled”, the bit switch setting is used. |

**Switch 02**

| No | FUNCTION | | | | | COMMENTS |
|---|---|---|---|---|---|---|
| 0-3 | Initial Tx modem rate | | | | | If training with a particular remote terminal always takes too long, the initial modem rate may be too high. Reduce the initial Tx modem rate using these bits.<br>For the settings 14.4 or kbps slower, Switch 04 bit 4 must be changed to 0.<br>Note<br>▪ Do not use settings other than listed on the left. If the setting is “Disabled”, the bit switch setting is used. |
| | Bit3 | Bit2 | Bit1 | Bit0 | bps | |
| | 0 | 0 | 0 | 0 | Not used | |
| | 0 | 0 | 0 | 1 | 2400 | |
| | 0 | 0 | 1 | 0 | 4800 | |
| | 0 | 0 | 1 | 1 | 7200 | |
| | 0 | 1 | 0 | 0 | 9600 | |
| | 0 | 1 | 0 | 1 | 12000 | |
| | 0 | 1 | 1 | 0 | 14400 | |
| | 0 | 1 | 1 | 1 | 16800 | |
| | 1 | 0 | 0 | 0 | 19200 | |
| | 1 | 0 | 0 | 1 | 21600 | |
| | 1 | 0 | 1 | 0 | 24000 | |
| | 1 | 0 | 1 | 1 | 26400 | |
| | 1 | 1 | 0 | 0 | 28800 | |

Dedicated Transmission Parameters

| | | | | | | |
|---|---|---|---|---|---|---|
| | 1 | 1 | 0 | 1 | 31200 | |
| | 1 | 1 | 1 | 0 | 33600 | |
| | 1 | 1 | 1 | 1 | Disabled | |
| | Other settings: **Not used** | | | | | |
| 4-7 | **Not used** | | | | | Do not change the settings. |

| **Switch 03** | | |
|---|---|---|
| **No** | **FUNCTION** | **COMMENTS** |
| 0-1 | Inch-mm conversion before tx<br>Bit 1: 0, Bit 0: 0<br>= Inch-mm conversion available<br>Bit 1: 0, Bit 0: 1 = Inch only<br>Bit 1: 1, Bit 0: 0 = Not used<br>Bit 1: 1, Bit 0: 1 = Disabled | The machine uses inch-based resolutions for scanning. If “inch only” is selected, the printed copy may be slightly distorted at the other end if that machine uses mm-based resolutions.<br>If the setting is “Disabled”, the bit switch setting is used. |
| 2-3 | DIS/NSF detection method<br>Bit 3: 0, Bit 2: 0<br>= First DIS or NSF<br>Bit 3: 0, Bit 2: 1<br>= Second DIS or NSF<br>Bit 3: 1, Bit 2: 0 = Not used<br>Bit 3: 1, Bit 2: 1 = Disabled | (0, 1): Use this setting if echoes on the line are interfering with the set-up protocol at the start of transmission. The machine will then wait for the second DIS or NSF before sending DCS or NSS.<br>If the setting is “Disabled”, the bit switch setting is used. |
| 4 | V.8 protocol<br>0: Off<br>1: Disabled | If transmissions to a specific destination always end at a lower modem rate (14,400 bps or lower), disable V.8 protocol so as not to use V.34 protocol.<br>0: V.34 communication will not be possible.<br>If the setting is “Disabled”, the bit switch setting is used. |
| 5 | Compression modes available in transmit mode | This bit determines the capabilities that are informed to the other terminal during transmission. |

| | | |
|---|---|---|
| | 0: MH only<br>1: Disabled | If the setting is “Disabled”, the bit switch setting is used. |
| 6-7 | ECM during transmission<br>Bit 7: 0, Bit 6: 0 = Off<br>Bit 7: 0, Bit 6: 1 = On<br>Bit 7: 1, Bit 6: 0 = Not used<br>Bit 7: 1, Bit 6: 1 = Disabled | For example, if ECM is switched on but is not wanted when sending to a particular terminal, use the (0, 0) setting.<br>Note<br>▪ V.8/V.34 protocol and JBIG compression are automatically disabled if ECM is disabled.<br>▪ If the setting is “Disabled”, the bit switch setting is used. |

| |
|---|
| **Switch 04 - Not used** (do not change the settings) |
| **Switch 05 - Not used** (do not change the settings) |
| **Switch 06 - Not used** (do not change the settings) |
| **Switch 07 - Not used** (do not change the settings) |
| **Switch 08 - Not used** (do not change the settings) |
| **Switch 09 - Not used** (do not change the settings) |

### *E-mail Parameters*

The initial settings of the following e-mail parameters are all "0" (all parameters disabled).

| **Switch 00** | | |
|---|---|---|
| **No** | **FUNCTION** | **COMMENTS** |
| 0 | MH Compression mode for e-mail attachments<br>**0**: Off<br>1: On | Switches MH compression on and off for files attached to e-mails for sending. |
| 1 | MR Compression mode | Switches MR compression on and off for files |

| | | |
|---|---|---|
| | for e-mail attachments<br>**0**: Off<br>1: On | attached to e-mails for sending. |
| 2 | MMR Compression mode for e-mail attachments<br>**0**: Off<br>1: On | Switches MMR compression on and off for files attached to e-mails for sending. |
| 3-6 | **Not used** | Do not change these settings. |
| 7 | Designates the bits to reference for compression method of e-mail attachments<br>**0**: Registered (Bit 0 to 6)<br>1: No registration. | The "0" selection (default) references the settings for Bits 00, 01, 02 above. The "1" selection ignores the selections of Bits 00, 01, 02. |

| **Switch 01** | | |
|---|---|---|
| **No** | **FUNCTION** | **COMMENTS** |
| 0 | Original width of e-mail attachment: A4<br>**0**: Off<br>1: On | Sets the original width of the e-mail attachment as A4. |
| 1 | Original width of e-mail attachment: B4<br>**0**: Off<br>1: On | Sets the original width of the e-mail attachment as B4. |
| 2 | Original width of e-mail attachment: A3<br>**0**: Off<br>1: On | Sets the original width of the e-mail attachment as A3. |
| 3-6 | **Not used** | Do not change these settings. |

| | | |
|---|---|---|
| 7 | Designates the bits to reference for original size of e-mail attachments<br>**0**: Registered (Bit 0 to 6)<br>1: No registration. | The "0" selection (default) references the settings for Bits 00, 01, 02 above. The "1" selection ignores the selections of Bits 00, 01, 02. |

| **Switch 02** | | |
|---|---|---|
| **No** | **FUNCTION** | **COMMENTS** |
| 0 | Line resolution of e-mail attachment: 200 x 100<br>**0**: Off<br>1: On | Sets the line resolution of the e-mail attachment as 200 x100. |
| 1 | Line resolution of e-mail attachment: 200 x 200<br>**0**: Off<br>1: On | Sets the line resolution of the e-mail attachment as 200 x 200. |
| 2 | Line resolution of e-mail attachment: 200 x 400<br>**0**: Off<br>1: On | Sets the line resolution of the e-mail attachment as 200 x 400. |
| 3 | Not used | Do not change these settings. |
| 4 | Line resolution of e-mail attachment: 400 x 400<br>**0**: Off<br>1: On | Sets the line resolution of the e-mail attachment as 400 x 400. |
| 5-6 | **Not used** | Do not change these settings. |
| 7 | Designates the bits to reference for original size of e-mail attachments<br>**0**: Registered (Bit 0 to 6)<br>1: No registration. | The "0" selection (default) references the settings for Bits 00, 01, 02, 04 above. The "1" selection ignores the selections of Bits 00, 01, 02, 04. |

| |
|---|
| **Switch 03 - Not used** (do not change the settings) |

| **Switch 04** | | |
|---|---|---|
| **No** | **FUNCTION** | **COMMENTS** |
| 0 | Full mode address selection<br>0: Full mode address<br>1: No full mode (simple mode) | If the other ends have the addresses, which have the full mode function flag ("0"), this machine determines them as full mode standard machines.<br>▪ This machine attaches the "demand of reception confirmation" to a message when transmitting.<br>▪ This machine updates the reception capability to the address book when receiving. |
| 1-7 | **Not used** | Do not change these settings. |

| **Switch 05** | | |
|---|---|---|
| **No** | **FUNCTION** | **COMMENTS** |
| 0 | Directr transmission selection to SMTP server<br>0: ON<br>1: OFF | Allows or does not allow the direct transmission to SMTP server. |
| 1-7 | Not used | Do not change these settings. |

| |
|---|
| **Switch 06 - Not used** (do not change the settings) |
| **Switch 07 - Not used** (do not change the settings) |
| **Switch 08 - Not used** (do not change the settings) |
| **Switch 09 - Not used** (do not change the settings) |

# 4.6 SERVICE RAM ADDRESSES

**CAUTION**

- Do not change the settings which are marked as “Not used” or “Read only.”

**680001 to 680004(H) - ROM version (Read only)**

680001(H) - Revision number (BCD)

680002(H) - Year (BCD)

680003(H) - Month (BCD)

680004(H) - Day (BCD)

**680006 to 680015(H)** - Machine’s serial number (16 digits - ASCII)

**680018(H)** - Total program checksum (low)

**680019(H)** - Total program checksum (high)

**680020 to 68003F(H**) - System bit switches

**680050 to 68005F(H)** - Printer bit switches

**680060 to 68007F(H)** - Communication bit switches

**680080 to 68008F(H)** - G3 bit switches

**680090 to 68009F(H)** - G3-2 bit switches: Not used

**6800A0 to 6800AF(H)** - G3-3 bit switches: Not used

**6800D0(H) - User parameter switch 00 (SWUER_00)** : Not used

**6800D1(H) - User parameter switch 01 (SWUSR_01)** : Not used

**6800D2(H) - User parameter switch 02 (SWUSR_02)**

Bit 0: Forwarding mark printing on forwarded messages 0: Disabled, 1: Enabled

Bit 1: Center mark printing on received copies

(This switch is not printed on the user parameter list.)

0: Disabled, 1: Enabled

Bit 2: Reception time printing

(This switch is not printed on the user parameter list.)

0: Disabled, 1: Enabled

Bit 3: TSI print on received messages 0: Disabled, 1: Enabled

Bit 4: Checkered mark printing

(This switch is not printed on the user parameter list.)

0: Disabled, 1: Enabled

Bit 5: Not used

Bit 6: Not used

Bit 7: Not used

**6800D3(H) - User parameter switch 03 (SWUSR_03: Automatic report printout)**

Bit 0: Transmission result report (memory transmissions) 0: Off, 1: On

Bit 1: Not used

Bit 2: Memory storage report 0: Off, 1: On

Bit 3: Polling reserve report (polling reception) 0: Off, 1: On

Bit 4: Polling result report (polling reception) 0: Off, 1: On

Bit 5: Transmission result report (immediate transmissions) 0: Off, 1: On

Bit 6: Not used

Bit 7: Journal 0: Off, 1: On

**6800D4(H) - User parameter switch 04 (SWUSR_04: Automatic report printout)**

Bit 0: Not used

Bit 1: Automatic communication failure report and transfer result report output 0: Off, 1: On

Bits 2 to 3: Not used

Bit 4: Indicates the parties 0: Not indicated, 1: Indicated

Bit 5: Include sender's name on reports 0: Off, 1: On

Bit 6: Not used

Bit 7: Inclusion of a sample image on reports 0: Off, 1: On

**6800D5(H) - User parameter switch 05 (SWUSR_05)**

Bit 0: Substitute reception when the base copier is in an SC condition

0: Enabled, 1: Disabled

Bits 1 and 2: Condition for substitute rx when the machine cannot print messages (Paper end, toner end, jam, and during night mode)

Bit 2: 0, Bit 1: 0 = The machine receives all the fax messages.

Bit 2: 0, Bit 1: 1 = The machine receives the fax messages with RTI or CSI.

Bit 2: 1, Bit 1: 0 = The machine receives the fax messages with the same ID code.

Bit 2: 1, Bit 1: 1 = The machine does not receive anything.

Bit 3: Not used

Bit 4: Not used

Bit 5: Just size printing 0: Off, 1: On

Bit 6: Not used

Bit 7: Add paper display when a cassette is empty 0: Off, 1: On

**6800D6(H) - User parameter switch 06 (SWUSR_06)**: Not used

**6800D7(H) - User parameter switch 07 (SWUSR_07)**

Bit 0 Ringing 0: Off, 1: On

Bit1: Automatic answering message 0: Off, 1: On

Bit 2: Parallel memory transmission 0: Off, 1: On

Bits 3 and 4: Not used

Bit 5: Remote control 0: Off, 1: On

Bits 6 and 7: Not used

**6800D8(H) - User parameter switch 08 (SWUSR_08)**

Bits 0 and 1: Not used.

Bit 2: Authorized reception

0: Only faxes from senders whose RTIs/CSIs are specified for this feature are accepted.

1: Only faxes from senders whose RTIs/CSIs are not specified for this feature are accepted.

Bits 3 to 7: Not used.

**6800D9(H) - User parameter switch 09 (SWUSR_09)**: Not used

**6800DA(H) - User parameter switch 10 (SWUSR_0A)**

Bits 0 to 2: Not used

Bit 3: Page reduction 0: Off, 1: On

Bits 4 and 5: Not used

Bit 6: Use both e-mail notification and printed reports to confirm the transmission results 0: Off, 1: On

Bit 7: Not used

**6800DB(H) - User parameter switch 11 (SWUSR_0B)**

Bits 0 and 1: Not used

Bit 2: White original detection 0: Off, 1: On (alarm and alert message on the LCD)

Bit 3: Receive rejection for 1300 Hz transmission 0: Off (receive), 1: On (not receive)

Bit 5: Not used

Bit 6: Printout of messages received while acting as a forwarding station 0: Off, 1: On

Bit 7: Not used

**6800DC(H) - User parameter switch 12 (SWUSR_0C)**: Not used

**6800DD(H) - User parameter switch 13 (SWUSR_0D)**: Not used

**6800DE(H) - User parameter switch 14 (SWUSR_0E)**

Bit 0: Message printout while the machine is in Night Printing mode 0: On, 1: Off

Bit 1: Maximum document length detection 0: Double letter, 1: Longer than double-letter (well log) – up to 1,200 mm

Bit 2: Not used

Bit 3: Fax mode settings, such as resolution, before a mode key (Copy/Fax/Printer/Scanner) is pressed 0: Not cleared, 1: Cleared

Bits 4 to 6: Not used

Bit 7: Not used

**6800DF(H) - User parameter switch 15 (SWUSR_0F)**

(This switch is not printed on the user parameter list.)

Bits 0, 1 and 2: Cassette for fax printout

Bit 2: 0, Bit 1: 0, Bit 0: 1 = 1st paper feed station

Bit 2: 0, Bit 1: 1, Bit 0: 0 = 2nd paper feed station

Bit 2: 0, Bit 1: 1, Bit 0: 1 = 3rd paper feed station

Bit 2: 1, Bit 1: 0, Bit 0: 0 = 4th paper feed station

Bit 2: 1, Bit 1: 0, Bit 0: 1 = LCT

Other settings Not used

Bits 3 and 4: Not used

Bit 5: Using the cassette specified by bits 0, 1 and 2 above only 0: On, 1: Off

Bits 6 and 7: Not used

**6800E0(H) – User parameter switch 16 (SWUSR_10)**

(This switch is not printed on the user parameter list.)

Bits 0 and 1: Not used

Bit 2: Paper size selection priority for an A4 size fax message when A4/LT size paper is not available. 0: A3 has priority, 1: B4 has priority

Bits 3 to 7: Not used

**6800E1(H) – User parameter switch 17 (SWUSR_11)**

Bit 0: Not used

⇒ Bit 1: Disable Broadcasting: To avoid accidentally specifying multiple destinations, users can disable broadcasting. They cannot specify group destinations if they disable broadcasting. They can specify only one address at a time. 1: On, 0: Off

Bit 2: Inclusion of the “Add” button when a sequence of Quick/Speed dials is selected for broadcasting 0:Not needed, 1: Needed

Bits 3, 5 and 6: Not used

⇒ Bit 4: Display Destination Prior to transmission: To prevent documents being sent to the wrong destination, users can configure the machine to display the destination again after it has been entered and before the file is sent. 1: On, 0: Off

Bit 7: Press “Start” key without an original when using the on hook dial or external phone, 0: displays “Cannot detect original size”. 1: Receives fax messages.

**6800E2(H) - User parameter switch 18 (SWUSR_12)**

Bit 0: TTI date 0: Off, 1: On

Bit 1: TTI sender 0: Off, 1: On

Bit 2: TTI file number 0: Off, 1: On

Bit 3: TTI page number 0: Off, 1: On

Bits 4 to 6: Not used

Bit 7: Japan only

**6800E3(H) - User parameter switch 19 (SWUSR_13):**

Bit 0: Not used

Bit 1: Journal format

0: The Journal is separated into transmissions and receptions

1: The Journal is separated into G3-1, G3-2, and G3-3 communications

Bit 2: Not used

Bit 3: 90° image rotation during B5 portrait Tx (This switch is not printed on the user parameter list.) 0: Off, 1: On

Bit 4: Reduction of sample images on reports to 50% in the main scan and sub-scan directions. (This switch is not printed on the user parameter list.) 0: Technician adjustment (printer switch 0E bits 3 and 4), 1: 50% reduction

Bit 5: Use of A5 size paper for reports (This switch is not printed on the user parameter list.) 0: Off, 1: On

Bits 6 and 7: Not used

**6800E4(H) - User parameter switch 20 (SWUSR_14)**

Bit 0: Automatic printing of the LAN fax result report 0: Off, 1: On

Bit 1: Not used.

Bits 2 to 5: Store documents in memory which could not be printed from PC fax (LAN fax) driver

| Bit 5 | Bit 4 | Bit 3 | Bit 2 | Setting |
|---|---|---|---|---|
| 0 | 0 | 0 | 0 | 0 min. |
| 0 | 0 | 0 | 1 | 1 min. |
| ↓ | ↓ | ↓ | ↓ | ↓ |
| 1 | 1 | 1 | 0 | 14 min. |
| 1 | 1 | 1 | 1 | 15 min. |

Bits 6 and 7: Not used.

**6800E5(H) - User parameter switch 21 (SWUSR_15)**

Bit 0: Print results of sending reception notice request message 0: Disabled (print only when error occurs), 1: Enabled

Bit 1: Respond to e-mail reception acknowledgment request 0: Disabled, 1: Enabled

Bit 2: Not used

Bit 3: File format for forwarded folders and E-Mail 0: TIFF, 1:PDF

Bit 4: Transmit Journal by E-mail 0: Disabled, 1: Enabled

Bit 5: Not used

Bit 6: Network error display 0: Displayed, 1: Not displayed

Bit 7: Transmit error mail notification 0: Enabled, 1: Disabled

**6800E6(H) - User parameter switch 22 (SWUSR_16)**
(This switch is not printed on the user parameter list.)

Bit 0: Dial tone detection (PSTN 1) 0: Disabled, 1: Enabled

Bits 1 to 3: Not used

| Reentered Count | | | | |
|---|---|---|---|---|
| 7 | 6 | 5 | 4 | Count |
| 0 | 0 | 0 | 0 | 0 |
| 0 | 0 | 0 | 1 | 1 |
| 0 | 0 | 1 | 0 | 2 |
| | | | | ⋮ |
| 1 | 1 | 1 | 1 | 15 |

⇒ Bits 4 to 7: Re-enter Fax number to confirm destination (0 -15) (Default: 0000) (See ***Reentered Count*** chart) Enter the fax number again to confirm the destination is correct. Tx is disabled if the confirmation fax number does not match the first fax number. This function prevents faxes from being sent to the incorrect destination.

**6800E7(H) – User parameter switch 23 (SWUSR_17)**: Not used

**6800E8(H) - User parameter switch 24 (SWUSR_18)**: Not used

**6800E9(H) - User parameter switch 25 (SWUSR_19)**

Bit 0: Not used

Bit 1: Reception mode switch timer 0: Off, 1: On (switching Fax or Fax/Tel)

Bit 2: Mode priority switch 0: Fax first, 1: Tel first

Bit 3: Dial in function (Japan Only)

Bit 4: RDS operation 0: Not acceptable, 1: Acceptable for the limit specified by system switch 03

Note

- This bit is only effective when RDS operation can be selected by the user (see system switch 02).

Bits 5 to 7: Not used

**6800EA(H) - 6800EB(H) - User parameter switches 26 - 27 (SWUSR_1A - 1B)**: Not used

**6800EC(H) - User parameter switch 28(SWUSR_1C)**

**Xxxxx**

**6800ED(H) - User parameter switch 29(SWUSR_1D)**

**xxxxxx**

**6800EE(H) and 6800EF(H) - User parameter switches 30 and 31 (SWUSR_1E and 1F)**: Not used

**6800F0(H) - User parameter switch 32 (SWUSR_20)**

Bit 0: Quotation priority for a destination when there is no destination of the specified type

0: Paper output priority = Priority order: 1. IP-fax destination, 2. Fax Number, 3. E-mail address, 4. Folder

1: Electric putout order = Priority order: 1. E-mail address, 2. Folder, 3. IP-fax destination, 4. Fax number

Bits 1 to 7: Not used

**6800F1(H) - User parameter switch 33 (SWUSR_21)**: Not used

**6800F2(H) - User parameter switch 34 (SWUSR_22)**

Bit 0: Gatekeeper server used with IP-Fax 0: Disabled, 1: Enabled

Bit 1: SIP server used with IP-Fax 0: Disabled, 1: Enabled

Bits 2 to 7: Not used

**680100 to 68010F(H)** - G4 Parameter Switches – Not used

**680110 to 68012F(H)** - G4 Internal Switches – Not used

**680130 to 68016F(H)** - Service Switches

**680170 to 68017F(H)** - IFAX Switches

**680180 to 68018F(H)** - IP-FAX Switches

**680190 to 6801AF(H)** - Service station's fax number (SP3-101)

**6801B0 to 6801B9(H)** - Own fax PABX extension number

**6801BA to 6801C3(H)** - Own fax number (PSTN) – Not used

**6801C4 to 6801D7(H)** - Own fax number (ISDN G4) – Not used

**6801D8 to 6801E3(H)** - The first subscriber number (ISDN G3) – Not used

**6801E4 to 6801EF(H)** - The second subscriber number (ISDN G3) – Not used

**6801F0 to 6801FB(H)** - The first subscriber number (ISDN G4) – Not used

**6801FC to 680207(H)** - The second subscriber number (ISDN G4) – Not used

**680208 to 68021B(H)** - PSTN-1 RTI (Max. 20 characters - ASCII) - See the following note.

**68021C to 68022F(H)** - PSTN-2 RTI (Max. 20 characters - ASCII) - Not used

**680230 to 680246(H)** - PSTN-3 RTI (Max. 20 characters - ASCII) - Not used

**680247 to 680286(H)** - TTI 1 (Max. 64 characters - ASCII) - See the following note.

**680287 to 6802C6(H)** - TTI 2 (Max. 64 characters - ASCII) - Not used

**6802C7 to 680306(H)** - TTI 3 (Max. 64 characters - ASCII) - Not used

**680307 to 68031A(H)** - PSTN-1 CSI (Max. 20 characters - ASCII)

**68031B to 68032E(H)** - PSTN-2 CSI (Max.20 characters - ASCII) - Not used

**68032F to 680342(H)** - PSTN-3 CSI (Max.20 characters - ASCII) - Not used

**680343(H)** - Number of PSTN-1 CSI characters (Hex)

**680344(H)** - Number of PSTN-2 CSI characters (Hex) - Not used

**680345(H)** Number of PSTN-3 CSI characters (Hex) - Not used

Note

- If the number of characters is less than the maximum (20 for RTI, 32 for TTI), add a stop code (00[H]) after the last character.

**680380 to 680387(H)** - Last power off time (Read only)

680380(H) - 01(H) - 24-hour clock, 00(H) - 12-hour clock (AM), 02(H) - 12-hour clock (PM)

680381(H) - Year (BCD)

680382(H) - Month (BCD)

Service RAM Addresses

680383(H) - Day (BCD)

680384(H) – Hour

680385(H) – Minute

680386(H) – Second

680387(H) - 00: Monday, 01: Tuesday, 02: Wednesday, /// , 06: Sunday

**680394(H)** - Optional equipment (Read only – Do not change the settings)

Bit 0: Page Memory 0: Not installed, 1: Installed

Bit 1: SAF Memory 0: Not installed, 1: Installed

Bits 2 to 7; Not used

**680395(H)** - Optional equipment (Read only – Do not change the settings)

Bits 0 to 3: Not used

Bit 4: G3-2 0: Not installed, 1: Installed

Bit 5: G3-3 0: Not installed, 1: Installed

Bit 6 and 7: Not used

**680406 to 68040A** – Option G3 board (G3-2) ROM information (Read only)

680406(H) - Suffix (BCD)

680407(H) - Version (BCD)

680408(H) - Year (BCD)

680409(H) - Month (BCD)

68040A(H) - Day (BCD)

**68040B to 68040F** – Option G3 board (G3-3) ROM information (Read only)

68040B(H) - Suffix (BCD)

68040C(H) - Version (BCD)

68040D(H) - Year (BCD)

68040E(H) - Month (BCD)

68040F(H) - Day (BCD)

**680410(H)** - G3-1 Modem ROM version (Read only)

**680412(H)** - G3-2 Modem ROM version (Read only)

**680414(H)** - G3-3 Modem ROM version (Read only)

**680420(H)** - Number of multiple sets print (Read only)

**680476(H)** - Time for economy transmission (hour in 24h clock format - BCD)

**680477(H)** - Time for economy transmission (minute - BCD)

**680492(H)** - Transmission monitor volume 00 - 07(H)

**680493(H)** - Reception monitor volume 00 - 07(H)

**680494(H)** - On-hook monitor volume 00 - 07(H)

**680495(H)** - Dialing monitor volume 00 - 07(H)

**680496(H)** - Buzzer volume 00 - 07(H)

**680497(H)** - Beeper volume 00 - 07(H)

**6804A8(H)** - Machine code (Check ram 4)

**68918E(H)** - Gatekeeper server address - Main (Max. 128 characters - ASCII)

**68920E(H**) - Gatekeeper server address - Sub (Max. 128 characters - ASCII)

**68928E(H)** - Arias Number (Max. 128 characters - ASCII)

**68930E(H)** - SIP user name (Max. 128 characters - ASCII)

**68938E(H) - SIP digest authentication password** (Max. 128 characters - ASCII)

**68940E(H)** - Gateway address information (Max. 7100 characters - ASCII)

**68AFCA(H)** - Stand-by port number for H.232 connection

**68AFCCH)** - Stand-by port number for SIP connection

**68AFCE(H)** - RAS port number

**68AFD0(H)** - Gatekeeper port number

**68AFD2(H)** - Port number of data waiting for T.38

**68AFD4(H)** - Port number of SIP server

**68AFD6(H)** - Priority for SIP and H.323 0: H.323, 1: SIP

**68AFD7(H)** - SIP function 0: Disabled, 1: Enabled

**68AFD8(H)** - H.323 function 0: Disabled, 1: Enabled

**68AFD9(H) - SIP digest authentication function** 0: Disabled, 1: Enabled

**68AFDA(H) - IP-Fax backup data** 00 - 600 (H) - Not used

**69ED6A(H) to 69ED92(H)** - SIP server address (Read only)

69ED6A(H) - Proxy server - Main (Max. 128 characters - ASCII)

69ED72(H) - Proxy server - Sub (Max. 128 characters - ASCII)

69ED7A(H) - Redirect server - Main (Max. 128 characters - ASCII)

69ED82(H) - Redirect server - Sub (Max. 128 characters - ASCII)

69ED8A(H) - Registrar server - Main (Max. 128 characters - ASCII)

69ED92(H) - Registrar server - Sub (Max. 128 characters - ASCII)

**6BEBFE(H) - 6BEC1E (H) - Dial tone detection parameter** (Max. 11 x 3 lines)

This initializes following order. [0x04, 0x40, 0x03, 0x60, 0x64, 0xf4, 0x01,0x64, 0x04, 0xc8, 0x00]

**6BEBFE(H**) – Dial tone detection frequency – Upper limit (High)

Defaults: NA: 06, EU: 06, ASIA: 06

**6BEBFF(H)** – Dial tone detection frequency – Upper Limit (Low)

Defaults: NA: 50, EU: 50, ASIA: 50

**6BEC00(H)** – Dial tone detection frequency – Lower Limit (High)

Defaults: NA: 03, EU: 02, ASIA: 02

Service RAM Addresses

**6BEC01(H)** – Dial tone detection frequency – Lower Limit (Low)

Defaults: NA: 60, EU: 90, ASIA: 90

**6BEC02(H)** –Dial tone detection waiting time (20 ms)

Defaults: NA: 64, EU 64, ASIA: 64

**6BEC03 to 6BEC04** – Dial tone detection monitoring time (20 ms)

Defaults

| Area | 6BEC03 | 6BEC04 |
|---|---|---|
| NA | F4 | 01 |
| EU | F4 | 01 |
| ASIA | F4 | 01 |

**6BEC05(H)** – Dial tone detect judge time (20 ms)

Defaults: NA: 64, EU: 1B, ASIA: 32

**6BEC06(H)** – Dial tone disconnect permission time (20 ms)

Defaults: NA: 11, EU: 0F, ASIA: 11

# 5. SPECIFICATIONS

## 5.1 GENERAL SPECIFICATIONS

### 5.1.1 FCU

| | |
|---|---|
| Type: | Desktop type transceiver |
| Circuit: | PSTN (max. 3ch.)<br>PABX |
| Connection: | Direct couple |
| Original Size: | Book (Face down)<br>Maximum Length: 432 mm [17 ins]<br>Maximum Width: 297 mm [11.7 ins]<br>ARDF (Face up)<br>(Single-sided document)<br>Length: 128 - 1200 mm [5.0 - 47.2 ins]<br>Width: 105 - 297 mm [4.1 - 11.7 inch]<br>(Double-sided document)<br>Length: 128 - 432 mm [5.0 - 17 inch]<br>Width: 105 - 297 mm [4.1 - 11.7 inch] |
| Scanning Method: | Flat bed, with CCD |
| Resolution: | G3<br>8 x 3.85 lines/mm (Standard)<br>8 x 7.7 lines/mm (Detail)<br>8 x 15.4 line/mm (Fine) See Note1<br>16 x15.4 line/mm (Super Fine) See Note 1<br>200 x 100 dpi (Standard)<br>200 x 200 dpi (Detail)<br>400 x 400 dpi (Super Fine) See Note 1<br>Note<br>▪ Optional Expansion Memory required |

General Specifications

| | |
|---|---|
| Transmission Time: | G3: 3 s at 28800 bps; Measured with G3 ECM using memory for an ITU-T #1 test document (Slerexe letter) at standard resolution |
| Data Compression: | MH, MR, MMR, JBIG |
| Protocol: | Group 3 with ECM |
| Modulation: | V.34, V.33, V.17 (TCM), V.29 (QAM),<br>V.27ter (PHM), V.8, V.21 (FM) |
| Data Rate: | G3: 33600/31200/28800/26400/24000/21600/<br>19200/16800/14400/12000/9600/7200/4800/2400 bps<br>Automatic fallback |
| I/O Rate: | With ECM: 0 ms/line<br>Without ECM: 2.5, 5, 10, 20, or 40 ms/line |
| Memory Capacity: | ECM: 128 KB<br>SAF<br>Standard: 4 MB<br>With optional Expansion Memory: 28 MB (4 MB+ 24 MB)<br>Page Memory<br>Standard: 4 MB (Print: 2 MB + Scanner: 2 MB)<br>With optional Expansion Memory: 12 MB (4 MB + 8 MB)<br>(Print 8 MB + Scanner: 4 MB) |

## 5.1.2 CAPABILITIES OF PROGRAMMABLE ITEMS

The following table shows the capabilities of each programmable items.

| Item | Standard |
|---|---|
| Quick Dial | 2000 |
| Groups | 100 |
| Destination per Group | 500 |
| Destinations dialed from the ten-key pad overall | 500 |
| Programs | 100 |
| Auto Document | 6 |
| Communication records for Journal stored in the memory | 200 |
| Specific Senders | 30 |

The following table shows how the capabilities of the document memory will change after the Expansion Memory are installed.

| | Without the Expansion Memory | With the Expansion Memory |
|---|---|---|
| Memory Transmission file | 400 | 400 |
| Maximum number of page for memory transmission | 1000 | 1000 |
| Memory capacity for memory transmission (Note1) | 320 | 2240 |

Note

- Measured using an ITU-T #1 test document (Slerexe letter) at the standard resolution, the auto image density mode and the Text mode.

## 5.2 IFAX SPECIFICATIONS

| | |
|---|---|
| **Connectivity:** | Local area network<br>Ethernet 100base-Tx/10base-T<br>IEEE802.11a/g, g (wireless LAN), 1000 Base-T |
| **Resolution:** | Main scan: 400 dpi, 200 dpi<br>Sub scan: 400 dpi, 200 dpi, 100 dpi<br>Note<br>▪ To use 400 dpi, IFAX SW01 Bit 4 must be set to “1”. |
| **Transmission Time:** | 1 s (through a LAN to the server)<br>Condition: ITU-T #1 test document (Selerexe Letter)<br>MTF correction: OFF<br>TTI: None<br>Resolution: 200 x 100 dpi<br>Communication speed: 10 Mbps<br>Correspondent device: E-mail server<br>Line conditions: No terminal access |
| **Document Size:** | Maximum message width is A4/LT.<br>Note<br>▪ To use B4 and A3 width, IFAX SW00 Bit 1 (B4) and/or Bit 2 (A3) must be set to “1”. |
| **E-mail File Format:** | Single/multi-part<br>MIME conversion<br>Image: TIFF-F (MH, MR, MMR) |
| **Protocol:** | **Transmission:**<br>SMTP, TCP/IP<br>**Reception:**<br>POP3, SMTP, IMAP4, TCP/IP |
| **Data Rate:** | 100 Mbps(100base-Tx)<br>10 Mbps (10base-T) |

IFAX Specifications

| | |
|---|---|
| **Authentication Method:** | SMTP-AUTH<br>POP before SMTP<br>A-POP |
| **Remark:** | The machine must be set up as an e-mail client before installation. Any client PCs connected to the machine through a LAN must also be e-mail clients, or some features will not work (e.g. Autorouting). |

## 5.3 IP-FAX SPECIFICATIONS

| | |
|---|---|
| Network: | Local Area Network<br>Ethernet/10base-T, 100base-TX<br>IEEE802.11a/g, g (wireless LAN), 1000 Base-T |
| Scan line density: | 8 x 3.85 lines/mm, 200x100dpi (standard character),<br>8 x 7.7lines/mm, 200x200dpi (detail character),<br>8 x 15.4lines/mm (fine character: optional expansion memory required),<br>16 x 15.4lines/mm, 400x400dpi (super fine character: optional expansion memory required) |
| Original size: | Maximum A3 or 11"x 17" (DLT) |
| Maximum scanning size: | Standard: A3, 297mm x 432mm<br>Irregular: 297mm x 1200mm |
| Transmission protocol: | Recommended: T.38 Annex protocol, TCP, UDP/IP communication |
| Compatible machines: | IP-Fax compatible machines |
| IP-Fax transmission function: | Specify IP address and send fax to an IP-Fax compatible fax through a network.<br>Also capable of sending fax from a G3 fax connected to the public telephone lines via a VoIP gateway. |
| IP-Fax reception function: | Receive a fax sent from an IP-Fax compatible fax through a network.<br>Also capable of receiving fax from a G3 fax connected the public telephone lines via a VoIP gateway. |

# 5.4 FAX UNIT CONFIGURATION

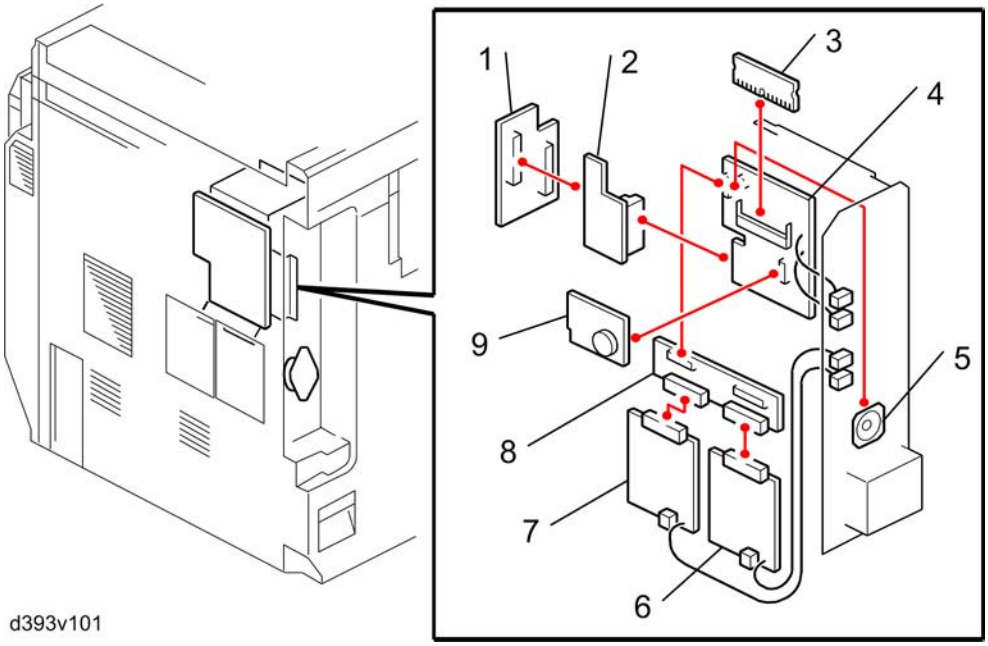


| Component | Code | No. | Remarks |
|---|---|---|---|
| MBU | D393 | 9 | Included with the fax unit |
| FCU | | 4 | |
| FCU I/F | | 2 | |
| GWFCU I/F | | 1 | |
| Speaker | | 5 | |
| Expansion Memory | G578 | 3 | Optional |
| CCU I/F Board | D393 | 8 | Optional |
| SG3 Board | | 6 | |
| SG3 Board (2nd) | D393 | 7 | Optional |
| Handset Type 1018 | B433 | - | NA only. Also used with J-C2 |

# 1 Bin Tray BN3070

# (D414)

| D414 1 BIN TRAY BN3070 | | |
|---|---|---|
| **Page** | **Date** | **Added/Updated/New** |
| | | None |

# 1 Bin Tray BN3070 (D414)

## TABLE OF CONTENTS

**1. REPLACEMENT AND ADJUSTMENT .....1**
1.1 ELECTRICAL COMPONENTS ..... 1
1.1.1 PAPER SENSOR..... 1
1.1.2 1-BIN CONTROL BOARD..... 3

# Read This First

## Safety and Symbols

### Replacement Procedure Safety

**⚠CAUTION**

- Turn off the main power switch and unplug the machine before beginning any of the replacement procedures in this manual.

### Symbols Used in this Manual

This manual uses the following symbols.

☛: See or Refer to

: Screws

: Connector

: Clip ring

: E-ring

# 1. REPLACEMENT AND ADJUSTMENT

## 1.1 ELECTRICAL COMPONENTS

### 1.1.1 PAPER SENSOR

1. Open the right door of the machine.

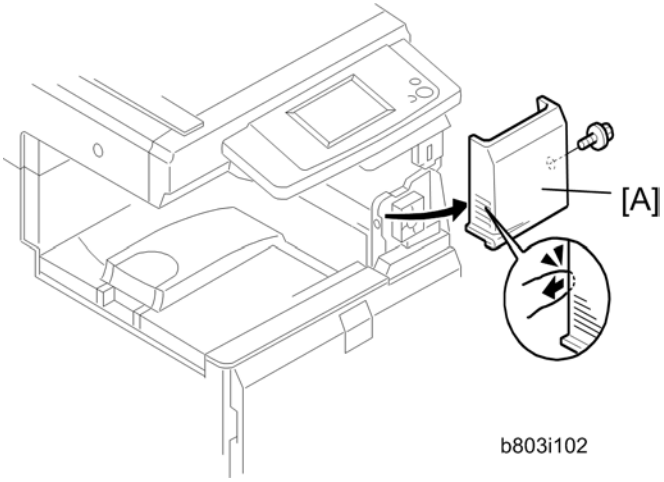


2. Remove the front right cover [A] (🔩 x 1).

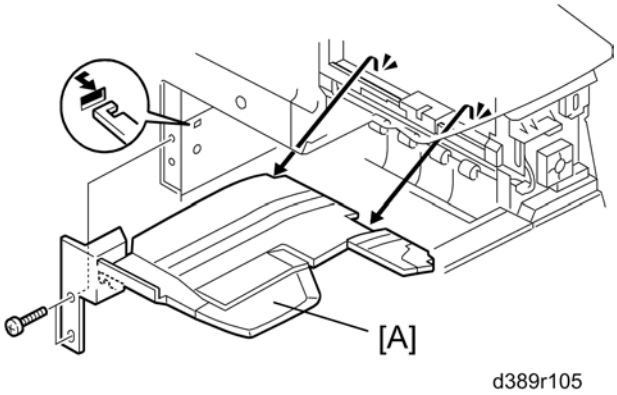


3. 1-bin-tray [B] (🔩 x 2; M3 x 16)

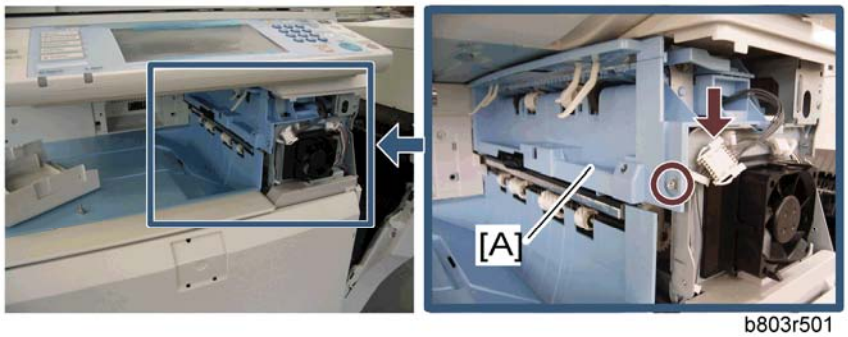


b803r501

4. 1-bin sorter unit [C]

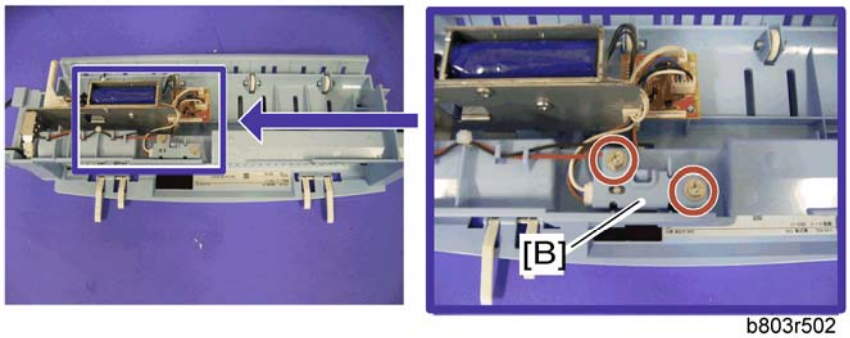


b803r502

5. Paper sensor cover [D] (🖉 x 2)

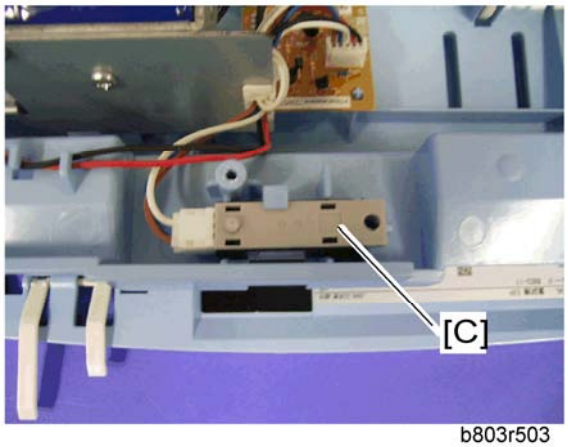


b803r503

6. Paper sensor [E] (✋ x 1, hook)

## 1.1.2 1-BIN CONTROL BOARD

1. 1-bin tray
2. 1-bin sorter unit (☛ "Paper Sensor")

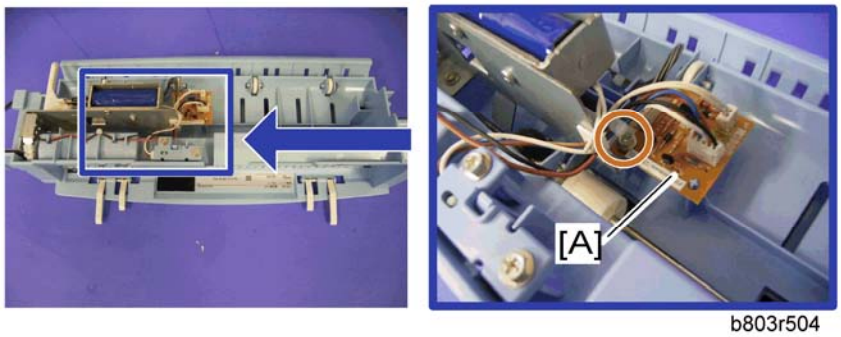


3. 1-bin control board [A] (☞ x 1, ☞ x 3)